METRIC/INCH-POUND

KSC-STD-Z-0005
Revision F-1

PNEUMATIC GROUND SYSTEMS DEVELOPMENT,

STANDARD FOR

Export Control Determination

NOT EXPORT CONTROLLED
This document has been reviewed by the KSC Export Control Office and it has been determined that it does not meet the criteria for control under the International Traffic in Arms Regulations (ITAR) or Export Administration Regulations (EAR). This document is approved for public release.

Reference EDR Log #:21361 NASA KSC Export Control Office, 321-867-9209

NOVEMBER 10, 2026

ENGINEERING DIRECTORATE

National Aeronautics and
Space Administration

John F. Kennedy Space Center



KSC-STD-Z-0005
Revision F-1

PNEUMATIC GROUND SYSTEMS DEVELOPMENT,

STANDARD FOR

Approved by:

//signed copy on file//

_____

Becky Murray,
Acting Director, Engineering

NOVEMBER 10, 2026

JOHN F. KENNEDY SPACE CENTER, NASA

RECORD OF REVISIONS/CHANGES

REV LTR	CHG NO.	DESCRIPTION	DATE
-		Basic issue.	
A			September 21, 1977
B			October 12, 1988
	B-1	Revised pages 7 and 8.	July 31, 2009
C		Updated document.	November 20, 2019
D		Revised definitions; added section 1.3; revised sections 2.0, 2.2, 3.1.1, 3.1.3, 3.1.4, 4.0, 4.1.2, 4.2.1, 4.2.3, 4.3, 4.4.1, 4.5, 4.5.1, 4.8.1, 4.8.2, 5.1, 5.3, 5.6, 5.7.1; revised Appendices A and B; added hyperlinks to applicable document citations.	December 10, 2024
E		Updated entire document including deleting existing Appendix A (moved Appendix B&C to A&B)	May 1, 2026
F		Revised sections 2.1 and 4.4, added new Appendix A	July 17, 2026
	F-1	Revised Export Control determination.	November 10, 2026

CONTENTS

1. SCOPE 1

1.1 Purpose 1
1.2 Applicability 1
1.3 Use of Shall, May, Should, and Will 1

2 APPLICABLE DOCUMENTS 2

2.1 Government Documents 2
2.2 Non-Government Documents 3

3 PIPING AND TUBING REQUIREMENTS 5

3.1 Tubing 5
3.1.1 Flared Tube Assemblies 5
3.1.2 Flared Fittings 5
3.1.3 Maximum Allowable Working Pressure 6
3.1.4 Threaded Ports 6
3.2 Piping 7
3.2.1 Maximum Allowable Working Pressure 7
3.2.2 Design and Installation 7
3.2.3 Material 7
3.2.4 Fittings 7
3.2.5 Mechanical Joints 7
3.2.6 Welding and Radiography 8
3.3 Marking and Identification 8

4 FLUID COMPONENT REQUIREMENTS 8

4.1 General 8
4.1.1 Maximum Allowable Working Pressure 8
4.1.2 Materials 8
4.1.3 Pressure Connections 9
4.1.4 Marking and Identification 9
4.2 Flexible Hoses 9
4.2.1 Application and Selection 9
4.2.2 Pressure Connections 9
4.2.3 Marking and Identification 9
4.3 Pressure Gauges 10
4.4 Pressure Relief Devices 11
4.5 Pressure Regulators 11
4.5.1 Application and Selection 11
4.5.2 Dome-Loaded Pressure Regulators 12
4.5.3 Manually Adjusted Pressure Regulators 13
4.5.4 Current-to-Pressure Regulators 13
4.5.5 Materials 13
4.6 Shutoff and Metering Valves 14

4.7 Filters 14
4.8 Pressure Vessels 15
4.8.1 Application 15
4.8.2 User's Design Requirements 15
4.8.3 Marking and Identification 15

5 PNEUMATIC SYSTEM REQUIREMENTS 16

5.1 Pressure Regulation Circuits 16
5.2 Oxygen Systems 20
5.3 Hypergol Systems 20
5.4 Multiple Fluid Systems 23
5.5 Vent Systems 24
5.6 Flexibility and Support 24
5.7 Layout, Marking, and Identification 25
5.7.1 System Layout 25
5.7.2 Flow Diagram 26
5.7.3 Components 26
5.7.4 Titles and Descriptions 27
5.8 Flow and Thermal Analysis, Verification and Validation (V&V) Testing, and Model Anchoring 27
5.9 Pressure System Certification 28
5.10 Environmental Protection 28
5.11 Material Compatibility 29
5.12 Cleanliness 29
5.13 Hydrostatic Test 29
5.14 Leak Test 29
5.15 Quality Assurance 30
5.15.1 Acceptance Test 30
5.15.2 Acceptance Data Packages 30
5.16 Packaging, Handling, and Transportation 30

6 NOTES 31

6.1 Intended Use 31
6.2 Citation Data 31

APPENDIX A. RELIEF VALVE INSTALLATION ANALYSIS METHODOLOGY 32

I. INLET LOSS EVALUATION (3% RULE) 33

II. COMPONENT MAXIMIUM ALLOWABLE WORKING PRESSURE EVALULATION 34

III. BACKPRESSURE EVALUATION 35

IV. FORCE BALANCE EVALUATION 36

V. ACOUSTIC INTERACTION EVALUATION 38

APPENDIX B. PRESSURE SYSTEM CERTIFICATION 39

I. CERTIFICATION OUTLINE AND REQUIRED PRODUCTS....39

II. EXAMPLE INITIAL SERVICE LIFE AND REMAINING LIFE ASSESSMENT 40

III. EXAMPLE RISK ASSESSMENT CODE DETERMINATION 41

IV. EXAMPLE IN-SERVICE INSPECTION PLAN....42

APPENDIX C. MEMORANDUM OF INTERPRETATION, LEAK TESTING OF PRESSURE VESSELS AND PRESSURIZED SYSTEMS (PVS) ABOVE DESIGN PRESSURE....43

FIGURES

Figure 1. Typical Single-Stage Pressure Regulation Circuit 18
Figure 2. Typical Multiple-Stage and Redundant Pressure Regulation Circuits 19
Figure 3: Pneumatic-Hypergol System Configurations 22
Figure 4: Multiple Fluid System Inlet Configuration 23
Figure 5: Example of Recommended Inlet Loss Evaluation Model....33
Figure 6: Example of Recommended Component MAWP Evaluation Model....34
Figure 7: Example of Recommended Backpressure Evaluation Model 35

ABBREVIATIONS, ACRONYMS, AND SYMBOLS

Units of measure and some terms commonly understood within the subject disciplines have been abbreviated in the body of this document without callout but are included among the following.

°	degree
AFT	Applied Flow Technologies
API	American Petroleum Institute
ARP	Aerospace Recommended Practice
AS	Aerospace Standard
ASME	American Society of Mechanical Engineers
ASTM	American Society for Testing and Materials
AWS	American Welding Society
CFR	Code of Federal Regulations
DOT	Department of Transportation
F	Fahrenheit
ft	foot
in	inch
KSC	John F. Kennedy Space Center
MAPTIS	Materials and Processes Technical Information System
MAWP	maximum allowable working pressure
MIL	military
MSFC	George C. Marshall Space Flight Center
NBBI	National Board of Boiler and Pressure Vessel Inspectors
NCS	national consensus standard
NIOSH	National Institute for Occupational Safety and Health
OSHA	Occupational Safety and Health Administration
psi	pound per square inch
psia	pound per square inch absolute
psig	pound per square inch gauge
PCTFE	polychlorotrifluoroethylene
PRD	pressure relief device
PTFE	polytetrafluoroethylene
RV	relief valve
SAE	Society of Automotive Engineers
SPEC	specification
STD	standard
UNS	unified numbering system
V&V	verification and validation

DEFINITIONS

For the purposes of this document, the following definitions apply.

built-up backpressure: the increase in pressure at the outlet of a pressure relief device that develops as a result of flow after the pressure relief device opens (reference: API 520 Part 1, paragraph 3.1.7).

design pressure: the pressure a pressurized item is designed to and is higher than any expected operating pressures. Due to the availability of standard wall thickness materials, many components will have a MAWP higher than the required design pressure. For pressure vessels, all pressures are defined as being at highest point of the unit in the operating position, and do not include static head pressure. The equipment designer needs to account for the higher pressures occurring at some components due to static head pressure if applicable.

hazardous fluids: gaseous oxygen, fuels, oxidizers, and other fluids that could cause corrosion, chemically or physically degrade materials in the system, or cause an exothermic reaction.

inlet losses: the pressure drop between the pressure/flow source (e.g., regulator, pressure vessel) and the pressure relief device inlet due to the maximum possible flow rate in a scenario in which the pressure relief device is required to operate (e.g., regulator fails open, vessel is pressurized above maximum allowable working pressure).

maximum allowable working pressure: an American Society of Mechanical Engineers (ASME) designation that establishes the rating for pressure-relief components on vessels. It measures the greatest amount of pressure that the weakest part of the vessel can handle at specific operating temperatures.

set pressure (for pressure relief devices): the value of increasing (or decreasing) inlet static pressure at which a pressure relief device displays one of the operational characteristics as defined by opening pressure, popping pressure, start-to-leak pressure, burst pressure, breaking pressure, or buckling pressure. The applicable operating characteristic for a specific device design is specified by the device manufacturer (reference: ASME BPVC-XIII, Appendix I).

set pressure tolerance (for pressure relief devices): the range of pressures at which a pressure relief device can open (reference: ASME BPVC-XIII, Table 3.6.3.1-2).

superimposed backpressure: the static pressure that exists at the outlet of a pressure relief device at the time the device is required to operate. Superimposed backpressure is the result of pressure in the discharge system coming from other sources and may be constant or variable (reference: API 520 Part 1, paragraph 3.1.61).

This standard revision has been approved by the Engineering Directorate of the John F. Kennedy Space Center (KSC) and is mandatory for use at KSC.

1. SCOPE

1.1 Purpose

This standard establishes the minimum requirements for materials, processes, and engineering practices for the design and development of pneumatic ground systems for use at KSC. Where the requirements of this standard do not meet the minimum program or project requirements, the latter shall take precedence.

1.2 Applicability

a) This standard applies to all equipment, whether installed in facilities or portable, which handles gaseous media, including but not limited to breathing air, helium, hydrogen, methane and other hydrocarbons, nitrogen, oxygen, and mixtures of these gases.

Design requirements for cooling and refrigerant system can be found in KSC-DE-512-SM. Pneumatic systems with operating temperatures below -100°F may have additional requirements imposed by KSC-STD-Z-0009. Consult the Materials and Processes Technical Authority.

b) This standard does not apply to facility compressed air systems operating at or below 150 psig, vacuum systems, portable or mobile equipment covered by Department of Transportation (DOT) 49 CFR regulations, or life support equipment regulated by National Institute for Occupational Safety and Health (NIOSH), Occupational Safety and Health Administration (OSHA), or KSC-STD-Z-0008.

Design requirements for vacuum and compressed air systems operating at or below 150 psig can be found in KSC-DE-512-SM.

c) These requirements apply to new equipment that has not been verified to meet requirements of a previous revision of this standard. Equipment designed or fabricated prior to the effective date of this standard may be verified as acceptable for use against the requirements of a previous revision of this standard. Any design changes to such equipment shall meet the requirements of this revision of this standard.

1.3 Use of Shall, May, Should, and Will

In this standard, the auxiliary verb “shall” denotes mandatory actions (i.e., requirements) that are verified. “May” denotes discretionary privilege or permission. “Should” denotes a good practice that is recommended but is not required. The terms “must” and “will” denote an expected outcome, a requirement levied by others, or a requirement that does not have mandated verification. When this standard is placed on a contract, the “will” statements in this standards manual are equivalent to “shall” statements for the purposes of the contract.

Requirements denoted by "shall" require formal evidence for closure. "Will" is a formal requirement which is verified during design reviews and certification meetings but does not require formal documented evidence tied to that requirement.

2 APPLICABLE DOCUMENTS

The following documents form a part of this document to the extent specified herein. When this document is used for procurement, including solicitations, or is added to an existing contract, the specific revision levels, amendments, and approval dates of said documents should be specified in an attachment to the solicitation, Statement of Work, or contract.

The applicable documents are accessible via the NASA Standards and Technical Assistance Resource Tool at http://standards.nasa.gov or may be obtained directly from the standards developing organization or other document distributors.

Citations of applicable documents are hyperlinked to their appearance in 2.1 and 2.2.

2.1 Government Documents

75M04185	Identification Tag, Tubing and Hose Lines
79K07491	Installation of Purge Hardware
80K51846	Flexhose Handling and Installation Requirements, Specification for
DOT 49 CFR	Code of Federal Regulations – Transportation
K0000484851-GEN	Fluid Systems Qualified Parts List (QPL)
K0000604564-ANA	API 520 Force Balance Assessment Template
K0000609834-GEN	KSC Engineering Relief Valve Evaluation and Action Plan
KDP-P-5042	Engineering Acceptance Data Package Process Document
KNPR 8715.3-1	KSC Safety Procedural Requirements Volume 1, Safety Procedural Requirements for Civil Servants/NASA Contractors
KSC-DE-512-SM	Ground Systems Development Standard
KSC-F-124	Fittings, Flared Tube, Specification for
KSC-GP-425	Fluid Fitting Engineering Standards
KSC-GP-435	Engineering Drawing Practices Volume I of II, Aerospace and Ground Support Equipment

KSC-SPEC-E-0002	Modular Electrical Enclosures, Racks, Consoles, and Accessories, Specification for
KSC-SPEC-Z-0008	Fabrication and Installation of Flared Tube Assemblies and Installation of Fittings and Fitting Assemblies, Specification for
KSC-STD-E-0015	Marking of Ground Support Equipment, Standard For
KSC-STD-Z-0009	Design of Cryogenic Ground Systems and Ground Support Equipment, Standard for
KSC-STD-Z-0017	Engineering Analysis, Thermal/Fluid, Standard for
KSMAB-26-010	KSC Safety and Mission Assurance Board (KSMAB) Decision Memorandum for Relief Valve Sizing Methodology
MIL-PRF-25567	Leak Detection Compound, Oxygen Systems
MSFC-DWG-20M02540	Assessment of Flexible Lines for Flow Induced Vibration
MSFC-SPEC-384	Leak Test Compound, LOX Compatible
MSFC-SPEC-3746	Flow Induced Vibration Assessment Requirements for Metal Bellows and Flexhoses
MSFC-STD-20M02540	Assessment of Flexible Lines for Flow Induced Vibration
NASA-STD-8719.17	NASA Requirements for Ground-Based Pressure Vessels and Pressurized Systems (PVS)
NASA-STD-8719.26	NASA Requirements for Ground Based Non-Code Metallic Pressure Vessels
NASA TM-2007-213740	Guide for Oxygen Compatibility on Oxygen Components/Systems

2.2 Non-Government Documents

API 520	Sizing, Selection, and Installation of Pressure-Relieving Devices
API 521	Pressure-Relieving and Depressuring Systems
API TR 522	Technical Report on Pressure-relief System Calculations

API 580	Elements of a Risk-Based Inspection Program
ASME B16.5	Pipe Flanges and Flanged Fittings
ASME B16.9	Factory-Made Wrought Buttwelding Fittings
ASME B31.3	Process Piping
ASME B36.19	Welded and Seamless Wrought Stainless Steel Pipe
ASME B40.100	Pressure Gauges and Gauge Attachments
ASME BPVC-VIII.1	ASME Boiler and Pressure Vessel Code, Section VIII Division 1, Rules for Construction of Pressure Vessels
ASME BPVC-XIII	ASME Boiler and Pressure Vessel Code, Section XIII Rules for Overpressure Protection
ASTM A182	Standard Specification for Forged or Rolled Alloy and Stainless Steel Pipe Flanges, Forged Fittings, and Valves and Parts for High-Temperature Service
ASTM A312	Standard Specification for Seamless, Welded, and Heavily Cold Worked Austenitic Stainless Steel Pipes
ASTM A403	Standard Specification for Wrought Austenitic Stainless Steel Piping Fittings
ASTM G63	Standard Guide for Evaluating Nonmetallic Materials for Oxygen Service
ASTM G88	Standard Guide for Designing Systems for Oxygen Service
ASTM G94	Standard Guide for Evaluating Metals for Oxygen Service
ASTM MNL 36	Safe Use of Oxygen and Oxygen Systems: Handbook for Design, Operation and Maintenance
ISO 14617	Graphical Symbols for Diagrams
ISO 4003	Permeable Sintered Metal Materials - Determination of Bubble Test Pore Size
NBBI NB18	Pressure Relief Device Certification
NBBI NB23	National Board Inspection Code
SAE ARP901	Bubble-Point Test Method

SAE ARP1658	Hose Assemblies, Installed, Visual Inspection Guide for
SAE AS5202	Port or Fitting End, Internal Straight Thread, Design Standard

3 PIPING AND TUBING REQUIREMENTS

3.1 Tubing

3.1.1 Flared Tube Assemblies

Pneumatic distribution tubing runs shall be fabricated, installed, and tested in accordance with KSC-SPEC-Z-0008, except as otherwise specified herein.

3.1.2 Flared Fittings

a) Flared tubing runs shall be assembled by use of threaded fittings or a combination of threaded and butt-welded fittings. Fitting sizes shall be limited to 1/4 to 2 inch tube sizes.

b) Flared tube ends shall utilize a coupling nut (AS4326/KC142) and sleeve (AS4327/KC143) that matches the tube material (KSC-GP-425 material code K for UNS S30400, S31600, and S31603 tube, material code L for UNS N08367 and S31254 tube).

KSC-GP-425 material code L coupling nuts and sleeves are acceptable for use with all stainless steel tubing but should be avoided due to increased cost.

c) Threaded fittings shall be per KSC-GP-425 to the greatest extent possible and shall be procured in accordance with KSC-F-124.

Fittings with equivalent KC and SAE AS part numbers in KSC-GP-425 are physically and functionally interchangeable. The SAE AS part number should be specified in design drawings and procurement documents when available.

d) In cases where the system maximum allowable working pressure (MAWP) exceeds the MAWP specified in KSC-SPEC-Z-0008, threaded fittings and tubing shall be of the Superpressure type per Newport Scientific, Inc. (Formerly known as Aminco) or Parker Autoclave Engineers. Installation design shall be in accordance with the manufacturer's instructions.

Superpressure fittings should meet requirements of ASME B31.3 Chapter IX, which relies upon fatigue analysis / fatigue strength of fittings and tubing. Such analysis is not easily obtained from fitting manufacturers and therefore such fittings shall be specified by manufacturers with successful history of use of their Superpressure fittings.

e) Other fitting types (e.g., pipe thread) shall not be used without approval of the Lead Design Engineer.

National Pipe Thread (NPT) connections should not be used if possible. If use is approved, the design entity should follow ASME B31.3 Appendix G mitigations.

f) Fittings per KSC-GP-425 shall be substituted for plain-nose 37-degree fittings in designs under control of the Lead Design Engineer when leaks occur or modifications are necessary.

The fittings described in KSC-GP-425 are functionally interchangeable with plain nose 37-degree flared tube fittings, except that the maximum operating temperature is limited to 425°F. JIC 37-degree female flare fittings should be avoided if possible. AS fittings and JIC fittings have differences in tolerances, classes of threads and materials. Mixing such fittings can lead to misalignment and poor fit which can cause leaks and damage to mating fittings.

3.1.3 Maximum Allowable Working Pressure

The maximum allowable working pressure (MAWP) of all tubing and tube assemblies shall be in accordance with KSC-SPEC-Z-0008 and ASME B31.3.

Fitting pressure ratings in KSC-SPEC-Z-0008 apply to stainless steel fittings (KSC-GP-425 material codes K and L, and KSC-GP-425 equivalent Aerospace Standard (AS) material codes J, K, R, and S) only. The pressure ratings in KSC-SPEC-Z-0008 do not account for their mechanical strength under other potentially applicable loads, (refer to ASME B31.3 paragraph 302.5). The MAWP determination must consider all loading conditions applicable to the designed function of the fitting. For other ductile materials, if the pressure is the only applicable loading condition, the MAWP may be determined by ASME B31.3 minimum wall thickness calculations, or by reducing the material's allowable stress per ASME B31.3 relative to that of type 316 stainless steel (20,000 psi).

3.1.4 Threaded Ports

a) The standard port design for use with the fittings specified herein shall be per SAE AS5202.

MS33649 ports are equivalent to SAE AS5202 ports. AND10049, AND10050, MC240, and MS16142 ports are generally compatible port designs but are not to be used for new design since occasional thread tolerance build-up on the KC fittings can prevent proper assembly of fitting to port.

b) In cases where the system MAWP exceeds the MAWP specified in KSC-SPEC-Z-0008, ports shall be of the Superpressure type (per Newport Scientific, Inc. or Parker Autoclave Engineers) and internally threaded. Installation design shall be in accordance with the manufacturer's instructions.

c) Other port types (e.g., pipe thread) shall not be used without approval of the Lead Design Engineer.

3.2 Piping

3.2.1 Maximum Allowable Working Pressure

The MAWP of all piping and pipe connections shall be determined based on the criteria specified in ASME B31.3.

3.2.2 Design and Installation

a) Buttwelded piping shall be used in systems where tubing is not practical (e.g., diameters larger than 2 inch are needed, or system MAWP exceeds tubing MAWP).

b) All piping installations shall be designed and installed in accordance with ASME B31.3, ASME B36.19, and the additional requirements specified herein.

3.2.3 Material

a) Pipe material shall be seamless, cold-drawn type 316 (UNS S31600) and/or 316L (UNS S31603) stainless steel per ASTM A312.

Type 316L stainless steel pipe should be used in applications where corrosion resistance is desired and the system MAWP is less than the MAWP of type 316L pipe. In applications where corrosion resistance is desired and a higher MAWP is needed, type 316/316L dual-grade stainless steel pipe should be used. This applies to selection of fitting and mechanical joint materials as well.

b) Other piping materials may be used with approval of the responsible Materials and Processes Technical Authority.

3.2.4 Fittings

a) Fittings, such as tees, crosses, elbows, and reducers, shall be of the buttweld type per KSC-GP-425 and ASME B16.9.

b) Fitting shall be type F316 and/or F316L stainless steel per ASTM A403 unless an alternate material is approved by the Materials and Processes Technical Authority.

3.2.5 Mechanical Joints

a) Mechanical joints in stainless steel piping shall consist of one of the following:

i. Buttweld hubs per KC159, KC160, KC166, KC167, or KC168, clamp assemblies per KC155, and polytetrafluoroethylene (PTFE)-coated seal rings per KC162, and shall be assembled per KC163.
ii. Flanged joints in accordance with ASME B16.5.

Buttweld hubs are typically used in locations where space allowances cannot accommodate flanged joints.

b) Mechanical joints shall be type F316 and/or F316L per ASTM A182 (KSC-GP-425 material code B and/or D).

c) Space allowances shall be made for disengagement of all mechanical joints.

3.2.6 Welding and Radiography

All pipe welding and weld inspection shall be in accordance with KSC-DE-512-SM.

3.3 Marking and Identification

All piping and tubing runs shall be marked in accordance with KSC-DE-512-SM.

4 FLUID COMPONENT REQUIREMENTS

Refer to K0000484851-GEN for a list of qualified components for use at KSC. While many of these components can be considered qualified for use at launch sites due to successful service in a previous spaceflight program, it is the designer's responsibility to determine the suitability of a particular component in its intended application.

4.1 General

4.1.1 Maximum Allowable Working Pressure

The MAWP of all components shall be determined based on the criteria specified in ASME B31.3.

4.1.2 Materials

a) Unless otherwise specified herein or approved by the Materials and Processes Technical Authority, all fluid component bodies and other pressure-containing parts shall be 300-series stainless steel per ASTM standards.

All alternative materials for fluid component bodies and other pressure-containing parts should be materials listed in ASME B31.3.

b) Components containing free-machining alloys such as UNS S30300 (type 303 stainless steel) and UNS S30323 (type 303Se stainless steel) used in corrosive environments shall be approved by the Materials and Processes Technical Authority.

4.1.3 Pressure Connections

Unless otherwise specified herein, component pressure connections shall have internal threads per 3.1.4 for tubing applications or be per 3.2.5 for piping applications.

4.1.4 Marking and Identification

a) Unless otherwise specified herein, all fluid components shall be permanently marked with the manufacturer's name, part number, and revision level, KSC part number and revision level (if applicable), and manufacturer's serial number (if applicable).

b) In addition, all pressure regulators, valves, and filters shall be permanently marked with the component MAWP and flow direction.

4.2 Flexible Hoses

4.2.1 Application and Selection

a) Flexible hoses shall only be used when required for connection of portable equipment, to provide for movement between interconnecting fluid lines, or for vibration isolation when no other feasible means are available.

b) Flexible hoses shall be selected, installed, labeled and inspected in accordance with KSC-DE-512-SM, NASA-STD-8719.17, SAE ARP1658, 80K51846 and KNPR 8715.3-1.

Gases such as helium and hydrogen permeate slightly through PTFE-lined hoses. In applications where such permeation is undesirable, convoluted, unlined bellows or flexible metal hoses should be used. Such designs should include analysis in accordance with MSFC-SPEC-3746 and MSFC-DWG-20M02540 to preclude premature failure due to flow-induced vibration. Acoustic coupling that can intensify the stresses caused by flow-induced vibration should be avoided by ensuring that normal fluid flow requirements do not exceed a velocity of Mach 0.2.

4.2.2 Pressure Connections

Flexible hoses shall contain stainless steel coupling nuts in accordance with section 3.1.4 of this standard to connect to tubing or tube fittings, or stainless steel pipe fittings in accordance with section 3.2.5 of this standard to connect to piping or pipe fittings.

4.2.3 Marking and Identification

a) Flexible hoses shall be identified by an attached metal band per 75M04185-10, or by a dog tag attached with a nylon-coated steel cable, secured with a ferrule or wire-rope swaging sleeve.

b) Tags shall be die-stamped or electrochemically etched per KSC-STD-E-0015, with 1/8 inch lettering. Identification shall include the date (month and year) of fabrication, date (month and year) of hydrostatic test, date (month and year) of last hose MAWP pressure test, date (month and year) of current periodic visual inspection and next due date (month and year), hose MAWP, KSC part number if applicable, manufacturer name and part number, component unique identifier if applicable (e.g., A-number), and service medium (only for hoses used in oxygen, hydrocarbon, or hypergolic systems).

c) All hoses shall be permanently marked with flow direction unless used in a temporary test setup.

d) Nylon-coated steel cable, secured with a ferrule or wire-rope swaging sleeve, shall have the exposed wire loose/dead ends free from sharp, pointed, and snagging surfaces.

4.3 Pressure Gauges

The requirements in this section do not apply to pressure gauges which are part of a commercial off-the-shelf (COTS) cylinder regulator assembly, or are associated with COTS pneumatic controllers, positioners, and other process control equipment.

a) All pressure gauges shall conform to ASME B40.100.

b) Pressure gauges shall be selected so that the normal working pressure falls within the middle half of the gauge's full-scale range, unless the system operates over a very wide range of operating pressures. In all cases, the system MAWP shall not exceed the full-scale range of the gauge.

This requirement does not apply to pressure transducers, which should have the smallest possible full-scale range to maximize accuracy. This may result in a gauge and transducer with different ranges at the same measurement point (e.g., a 750 psig circuit may utilize a 0-1500 psig gauge and a 0-1000 psig transducer).

c) Pressure gauges shall be constructed of a one-piece solid front case, shatterproof window, pressure relief back, and bourdon tube pressure sensing element, as defined by ASME B40.100.

d) Pressure gauges used in oxygen systems as defined by section 5.1 shall include a bourdon tip bleed to facilitate cleaning.

It is good design practice to include a bourdon tip bleed on all pressure gauges, regardless of the fluid medium.

e) Liquid-filled case pressure gauges shall not be used.

4.4 Pressure Relief Devices

a) Pressure Relief Device (PRD) including testing shall comply with KSC-DE-512-SM and NASA-STD-8719.17.

b) PRD shall be sized for the worst case overpressure scenario. When protecting a piping system downstream of a pressure regulator, the PRD flow capacity shall be greater than or equal to the flow capacity of the fully open upstream pressure regulator.

c) The orifice size of a selected PRD shall be the next largest commercially available size based on the calculated minimum required orifice size.

d) When selecting between PRD options with similar performance characteristics, a PRD with adjustable reseat (blowdown) shall be selected over one without adjustable reseat.

For PRD that protect a system downstream of a pressure regulator, the typical worst-case scenario is a fully open regulator. As a result, PRD's typically have much higher flow capacities than needed for some failure scenarios, such as improper manual adjustment or outlet pressure creep. Avoiding excessively oversized PRD needs to be considered when selecting PRD. API 520 and API 521 provide additional guidance for PRD selection and sizing.

e) An engineering assessment shall be performed for all PRD installations in accordance with API 520 part II and Appendix A.

When performing the assessment, the designer needs to consider the operational requirements of the system, including operational ranges and environmental extremes. This may drive the need to perform the assessments in A.1, A.2, and A.3 with multiple combinations of pressure and temperature inputs.

4.5 Pressure Regulators

4.5.1 Application and Selection

a) Pressure regulators shall be selected to maintain outlet pressures within the required system tolerance over the entire range of expected flow rates.

Balanced valve pressure regulators should be used where widely varying inlet pressures would cause the set outlet pressure to exceed required tolerances.

b) The effects of outlet pressure drop during flow (i.e., "droop") on overall system performance shall be accounted for in the design documentation (e.g., analysis report or data manual) when selecting pressure regulators.

When operating at or near their rated flow capacity, an undesired pressure drop usually occurs at the regulator outlet. This effect needs to be considered and accounted for in the system design. Manufacturer flow curves can be used to select appropriate regulators, but

as best practice ***regulators should normally operate between 20-80% of their rated flow capacity****. Typically, to ensure compliance with requirement 5.1(e), an upper limit of ~60% of the rated flow capacity is more appropriate (i.e., the regulator will still meet this 20-80% guideline after applying the requirement to maintain the required outlet pressure at a flow rate at least 25% above the required flow rate).*

c) Effects due to the ratio of upstream and downstream pressure on overall system performance shall be accounted for in the design documentation when selecting pressure regulators.

For each stage of regulation, ***the ratio of upstream to downstream pressure should not exceed 5:1 and the downstream pressure should be between 20-80% of the regulator's rated outlet pressure.*** *This will maximize controllability of pressure and flow rate, minimize temperature changes due to Joule-Thomson expansion, and minimize the size of downstream PRD and discharge lines.*

d) Regulators and downstream components shall be rated for the most severe temperature expected due to Joule-Thomson expansion.

e) For pressure regulation of gas cylinders, standard commercial-off-the-shelf cylinder regulators (with included pressure gauges) may be used, provided they meet all other governing requirements (e.g., DOT 49 CFR, KSC-DE-512-SM, NASA-STD-8719.17).

f) Systems shall not use pressure regulators as a means of pressure isolation.

4.5.2 Dome-Loaded Pressure Regulators

Dome-loaded pressure regulators are typically used for high flow applications. A typical dome-loaded pressure regulation circuit includes a manually-adjusted pressure regulator and/or a remotely-adjusted current-to-pressure regulator to set the outlet pressure of the dome-loaded regulator.

a) Dome-loaded pressure regulators shall be of the externally-loaded type, except where circumstances require internal loading.

b) The dome shall have a MAWP of no less than the upstream system MAWP at the dome inlet.

c) The regulator diaphragm or piston shall be rated to withstand a differential pressure equal to the system MAWP without sustaining damage.

d) When the commodity providing the dome pressure differs from the process commodity, the designer shall evaluate the possibility of leakage and cross-contamination across the diaphragm that separates them.

4.5.3 Manually Adjusted Pressure Regulators

Manually adjusted pressure regulators are typically used for low flow or dead-end applications where very accurate control of the outlet pressure is required.

a) Manually adjusted pressure regulators shall reach a mechanical stop at both ends of the adjustment range (i.e., fully increased, fully decreased).

b) Application or removal of force to the manual adjustment shall not cause disassembly of the pressure-containing structure of the pressure regulator.

c) When used in conjunction with dome-loaded pressure regulators, manually adjusted pressure regulators shall incorporate an internal relief feature which decreases the outlet pressure as the regulator is manually adjusted (i.e., decreased).

d) Manually adjusted pressure regulators that do not incorporate an internal relief feature shall be accompanied with a vent valve immediately downstream of the pressure regulator outlet.

Internal relief features are preferred on manually adjusted pressure regulators where possible (i.e., the fluid is non-hazardous, and the system location precludes an asphyxiation hazard). Some manually adjusted pressure regulators include vent ports, which can be used to satisfy requirement d) above.

4.5.4 Current-to-Pressure Regulators

When used in conjunction with dome-loaded pressure regulators, current-to-pressure regulators shall incorporate an internal relief feature which decreases the outlet pressure as the regulator is electronically adjusted (i.e., decreased).

Electronic current-to-pressure regulators are typically used in a dead-end application for precise, remote control of the outlet pressure of a dome-loaded pressure regulator.

It is a best practice to add filtration directly upstream of current-to-pressure regulators to prevent contamination related failures.

If a current-to-pressure regulator can be isolated from its controlling instrumentation (e.g., pressure transducer), a zero pressure reading can result in the regulator/downstream dome-loaded regulator opening completely and sending full upstream pressure to downstream components. Power outages may have similar effects on current-to-pressure regulators. A lack of pressure on an electrically powered up current-to-pressure transducer can cause the current-to-pressure transducer to overheat and fail. System operators should be aware of and account for these possibilities.

4.5.5 Materials

The material requirement in 4.1.2 does not apply to cylinder regulators described in 4.5.1(e) or current-to-pressure regulators described in 4.5.4.

4.6 Shutoff and Metering Valves

a) Valve stem travel shall reach a mechanical stop at both ends of the adjustment range (i.e., fully open, fully closed).

b) Application or removal of force to the stem-positioning device shall not cause disassembly of the pressure-containing structure of the valve.

c) Stem position indicators (if used) shall sense the position of the stem directly, not the position of the actuation device.

d) Shutoff valves shall be capable of isolating the fluid medium at the system MAWP from either side and shall be installed in accordance with the manufacturer's recommended flow direction for normal operation.

e) Manually actuated ball valves shall be equipped with positive local identification of flow-path position.

f) Split-body valves utilizing flat nonmetallic body gaskets shall be designed to restrain the gasket radially and shall include concentric serrations on the portions of the body halves mating with the gasket faces.

g) Balanced poppet manual valves that utilize external balancing ports or vents open to atmosphere shall not be used.

4.7 Filters

Tee-type filters are preferred over in-line filters since the elements can be removed without disconnecting the filter from the fluid system. The location and performance (i.e., pore size) of filters are based on analysis of the system requirements and balances the need to protect critical components with minimizing system pressure losses.

a) Filters shall be installed immediately upstream of all interfaces where control of particulate matter is critical and at other points as required to control particulate migration.

b) Filter elements shall maintain filtering quality and not be damaged when subjected to worst-case system conditions (i.e., maximum design flow rate with an element that is clogged to its maximum capacity).

c) All filters shall be designed with replaceable elements except those used in temporary test setups or unless approved by the Lead Design Engineer.

d) Filter elements shall be designed to withstand a differential pressure equal to or greater than the system MAWP without degradation of the filter element bubble-point.

e) Determination of the largest pore or hole size of filters shall be in accordance with SAE ARP901, if applicable.

SAE ARP901 is a recommended aerospace industry practice and is generally not an applicable test method for sintered metal filter elements. In such cases ISO 4003 or vendor documentation should outline test methods for determining effective pore size.

f) Systems containing tee-type filters shall provide adequate clearance for filter element removal and replacement.

g) Systems containing in-line filters shall provide adequate clearance for removal and replacement of the entire filter assembly.

4.8 Pressure Vessels

4.8.1 Application

All pressure vessels shall meet the requirements of NASA-STD-8719.17, NASA-STD-8719.26, and KSC-DE-512-SM as applicable

Metallic pressure vessels in accordance with ASME BPVC-VIII are preferred for pneumatic ground systems. Damage to composite overwrap pressure vessels (COPV) can be difficult to detect and have the potential for catastrophic failure modes; therefore, COPV should not be used in ground-based applications.

Depending on the size of the vessel, ASME BPVC-VIII may require additional ports for inspection or other purposes. It is good design practice to ensure that pressure vessels include ports for inspection, venting, and/or draining as needed.

4.8.2 User's Design Requirements

All new pressure vessel specifications shall include preparation of a User's Design Requirements or Specifications in accordance with the Code of Construction. Reference ASME BPVC-VIII Division 1, Nonmandatory Appendix KK, Division 2 paragraph 2.2.3, Division 3 paragraph KG-311.

4.8.3 Marking and Identification

Marking and identification of pressure vessels shall be in accordance with ASME BPVC-VIII and KNPR 8715.3-1.

Where multiple pressure vessels are used to store the same fluid medium, only the most visible pressure vessel needs to be labeled.

5 PNEUMATIC SYSTEM REQUIREMENTS

5.1 Pressure Regulation Circuits

The design of pressure regulation circuits requires analysis of the system requirements, including those downstream of the design interface. Pressure regulation accuracy, minimum and maximum flow rate, and reliability are all considered in this analysis. Figure 1 and Figure 2 illustrate typical pressure-regulating circuit schematics.

a) The number of regulation stages shall be determined in accordance with 4.5.1.

b) When redundant (parallel) regulation circuits are required and the Concept of Operations or any higher-level requirement requires automatic switchover capability and continuous uninterrupted operation, such circuits shall be designed in a configuration that allows major components (e.g., filters, regulators, PRD) in either flow circuit to be repaired in place or removed without interrupting the flow in the parallel circuit.

c) Inlet and outlet isolation valves and intermediate vent valves shall be provided for shutdown and maintenance. The inlet and outlet isolation valves shall be bi-directional and capable of isolating the system MAWP in either direction without seat failure. Normal venting operations shall not cause filters to backflow.

d) When a manually-adjusted or current-to-pressure regulator is used to set the outlet pressure of a dome-loaded regulator, a test port and vent valve shall be provided downstream of the manually-adjusted or current-to-pressure regulator (refer to Figure 1 and Figure 2).

e) Pressure regulation circuits shall be designed with the capability to maintain the required outlet pressure at a flow rate at least 25% above the required flow rate.

f) The tolerance on outlet pressure (expressed as either a range or a discrete value with plus/minus allowances) of each pressure regulator shall be identified on all schematic drawings.

g) The nominal operating pressure (expressed as either a range or a discrete value with plus-minus allowances) and MAWP of each pressure regulation circuit shall be identified on all schematic drawings.

h) The maximum allowable reseat pressure and set pressure of each pressure relief valve shall be identified on all schematic drawings.

i) All pressure-regulating circuits shall be designed so that all components can be easily removed and replaced. Allowances shall be made for tool clearances and disengagement of mechanical joints.

When designing a pressure regulation circuit, consider that when performing maintenance or repair on a pressure system, a pressure regulator or check valve cannot be used as the sole pressure isolation device.

Test ports/calibration ports should not be used for commodity supply for temporary configurations. Flow through test ports/calibration ports can result in unexpected pressure drops to pressure transducers/pressure gauges that are used to control regulators.

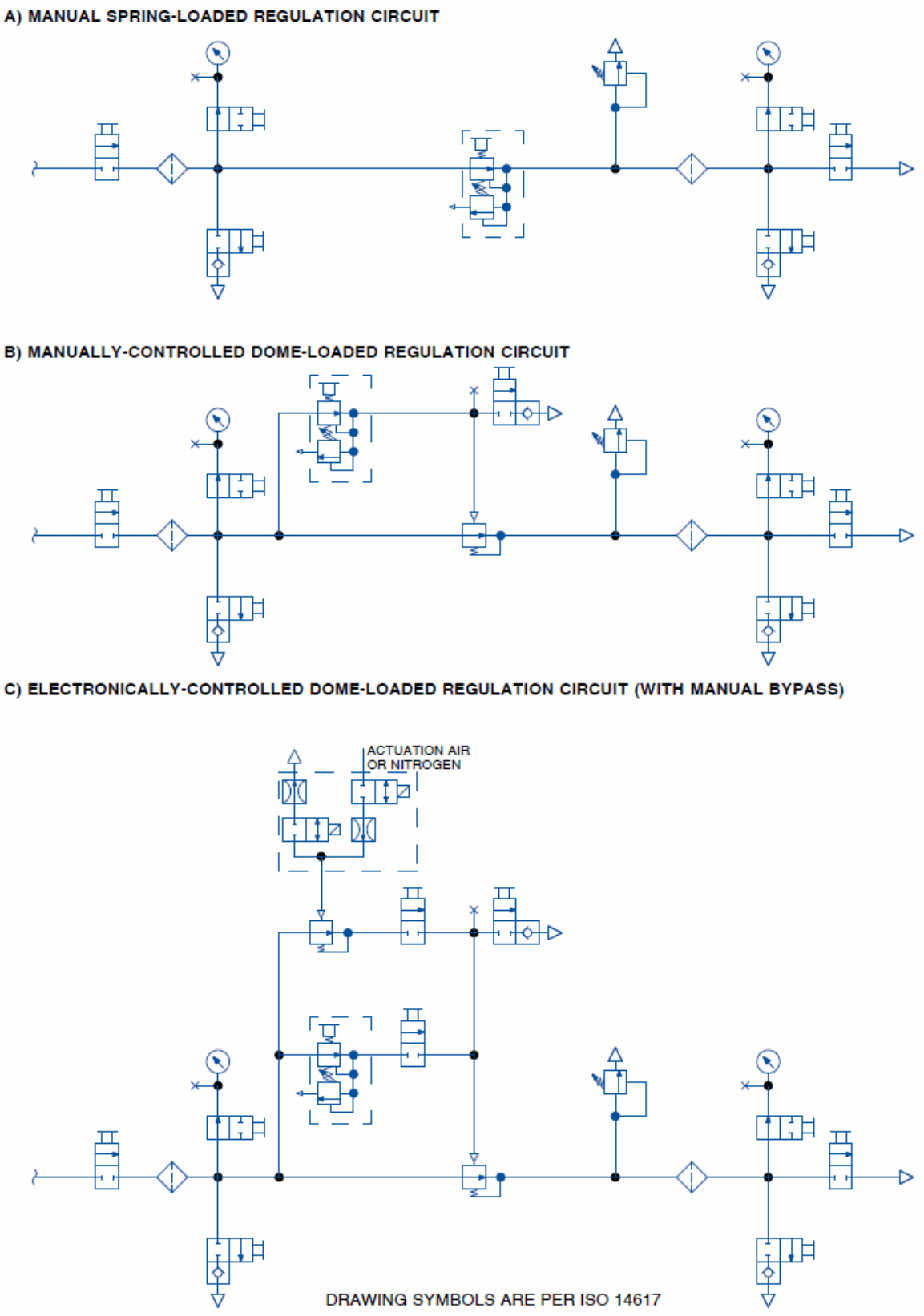

Figure 1. Typical Single-Stage Pressure Regulation Circuit

A) MULTI-STAGE REGULATION CIRCUIT

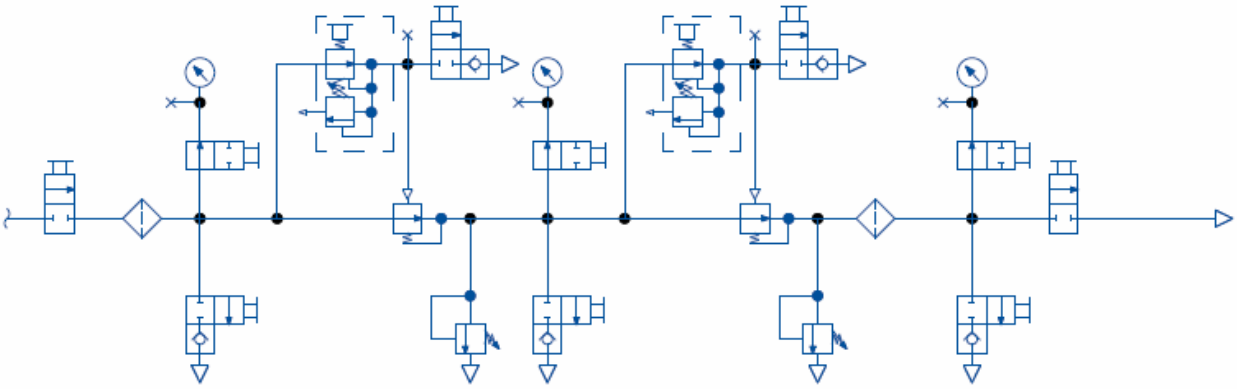

B) REDUNDANT MULTI-STAGE REGULATION CIRCUIT

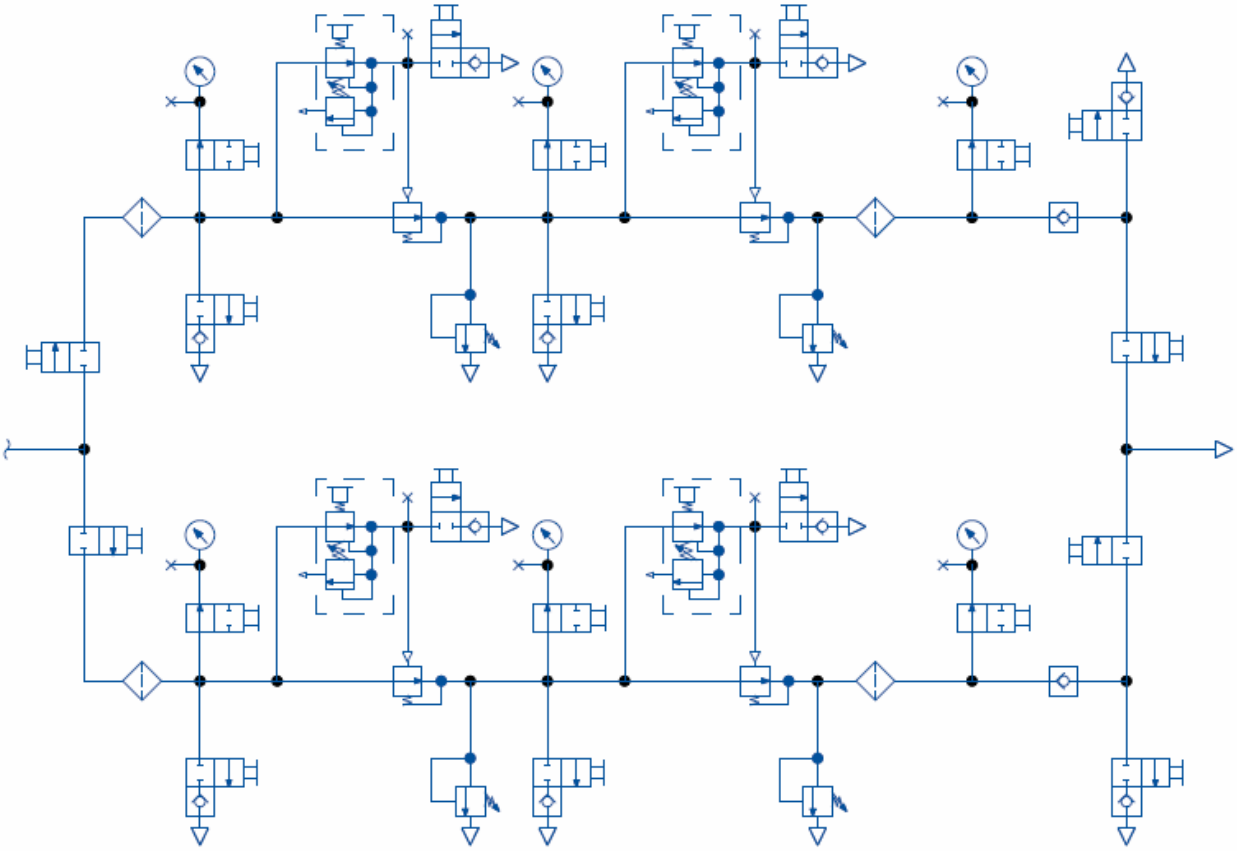

NOTE: TWO-STAGE MANUALLY-CONTROLLED DOME-LOADED REGULATION CIRCUITS ARE SHOWN. AN EQUIVALENT LAYOUT MAY BE USED FOR SPRING-LOADED AND ELECTRONICALLY-CONTROLLED REGULATION CIRCUITS. ADDITIONAL STAGES MAY BE ADDED AS REQUIRED.

DRAWING SYMBOLS ARE PER ISO 14617

Figure 2. Typical Multiple-Stage and Redundant Pressure Regulation Circuits

5.2 Oxygen Systems

For the purposes of this standard, oxygen systems are defined as any system containing pure oxygen pressurized above ambient pressure, mixed-gas systems where the partial pressure of oxygen at system MAWP is 30 psig or greater, and compressed air and breathing air systems with a system MAWP of 150 psig or greater. Guidelines on the design of safe oxygen systems are contained in ASTM MNL 36, ASTM G63, ASTM G88, ASTM G94, and NASA/TM-2007-213740.

Special care needs to be taken in the design of oxygen systems to minimize heating effects due to rapid increases in pressure. Fast-opening valves which can produce high-velocity kinetic effects and rapid pressurization should be avoided. Shutoff valves that cannot be throttled to prevent rapid pressurization of downstream components should include a bypass metering valve to allow for slow pressurization of the downstream system before the main shutoff valve is opened.

Gaseous oxygen systems shall be designed in accordance with KSC-DE-512-SM.

5.3 Hypergol Systems

The requirements listed below relate exclusively to mitigation of hypergolic propellant migration and do not constitute a complete design concept. Additional requirements for pressure regulation and sampling circuits are provided elsewhere in this standard. Figure 3(a) illustrates the minimum design requirements for pneumatic branches that interface with hypergolic propellant systems.

a) Each pneumatic branch line that interfaces with a hypergolic propellant system shall have a hand-operated shutoff valve upstream of two redundant spring-loaded poppet-type check valves in series with a test port between them to permit shutoff of the pneumatic supply and prevent backflow of hypergolic propellants into the pneumatic system.

The added test port serves to test check valve functionality and test for entrapped hypergols.

b) Each pneumatic branch line that interfaces with a hypergolic propellant system shall be downstream of a pneumatic supply pressure regulator which serves only branches that interface with one type of hypergolic propellant (i.e., fuel or oxidizer).

c) A port shall be available upstream and downstream of each regulator to permit periodic sampling and analysis of the pneumatic medium for hypergol contamination. Except in systems in which the check valve is connected to a vent system and there is no means of isolation downstream of the check valve, a pressure gauge shall be provided at some point downstream of each check valve (either in the pneumatic system or the hypergol system) to indicate the pressure in the hypergolic propellant system.

If there is no possibility of generating pressure downstream of the check valve, no pressure indication is needed.

d) Except in systems described by (f) below, the pneumatic system downstream of and including each pressure regulator shall be constructed of materials that are compatible with the hypergolic propellant. The Materials and Processes Technical Information System (MAPTIS) will be consulted to obtain material codes and ratings.

e) In cases where (1) an orifice is positioned downstream of the pneumatic pressure regulator, (2) pneumatic flow is autonomously established whenever the pneumatic system is opened to the hypergolic system, and (3) a pressure differential is continuously maintained across the orifice (e.g., aspirator systems), only the isolation valve immediately upstream of the orifice and all components downstream of (and including) the orifice must be compatible with the hypergolic propellant. The Materials and Processes Technical Information System (MAPTIS) will be consulted to obtain material codes and ratings.

f) Any sources of venting downstream of each pressure regulator (e.g., relief valve, vent valve, pressure regulator self-vent) shall be captured in a vent system dedicated to the hypergolic propellant with which the system interfaces.

g) The pneumatic system downstream of each pressure regulator shall be color-coded as a hypergolic propellant system in accordance with KSC-DE-512-SM.

In addition to the requirements listed above, pneumatic systems that interface with hypergolic propellant systems should incorporate the following elements wherever practical (refer to Figure 3(b)):

i. Each hypergolic propellant system (e.g., hydrazine, monomethyl hydrazine, nitrogen tetroxide, etc.) should be served by an independent pneumatic system with a pressure vessel that serves only one propellant.

ii. The entire pneumatic system should be constructed of materials that are compatible with the hypergolic propellant.

iii. At least two stages of pneumatic pressure regulation should be provided upstream of the isolation valve.

A) MINIMUM REQUIREMENTS FOR PNEUMATIC-HYPERGOL SYSTEMS

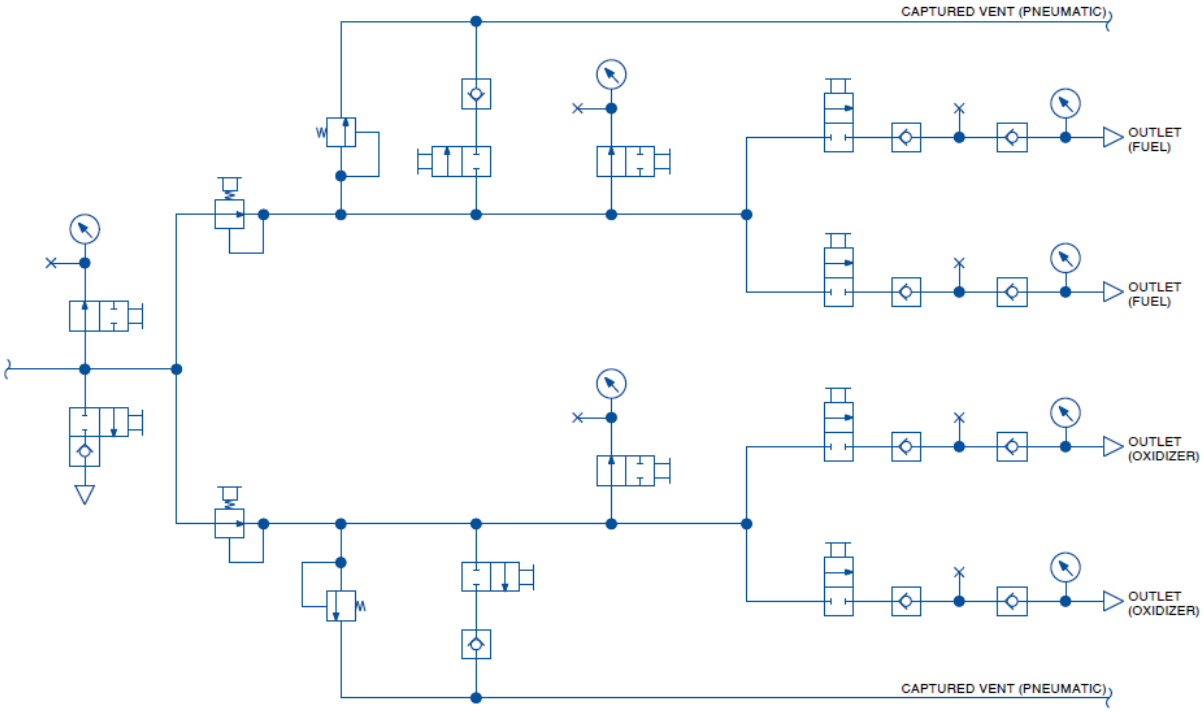

B) RECOMMENDED CONFIGURATION FOR PNEUMATIC-HYPERGOL SYSTEMS

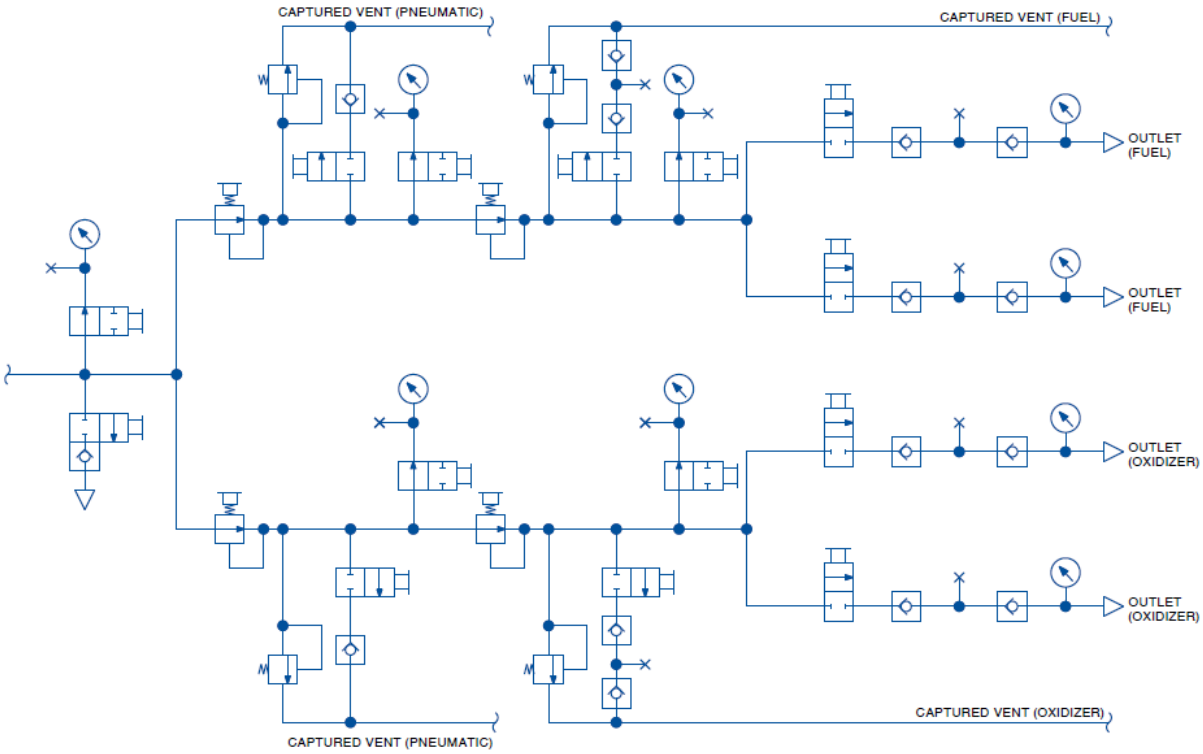

Figure 3: Pneumatic-Hypergol System Configurations

5.4 Multiple Fluid Systems

a) Pneumatic systems that operate with multiple fluid supplies shall be designed to prevent accidental contamination or cross-connection of one inlet supply by another.

b) Each fluid supply shall terminate with an isolation valve followed by a check valve, with a vent valve installed in between the isolation valve and check valve (refer to Figure 4).

c) Operating procedures shall require closing of the isolation valve and opening of the vent valve in the active supply prior to activation (i.e., closing the vent valve and opening the isolation valve) of another supply.

d) Multiple fluid systems in which one or more hazardous fluid supplies are used shall be designed to physically prevent connecting of a hazardous fluid supply to the wrong inlet (e.g., different size inlet ports, use of right- and left-hand threaded ports).

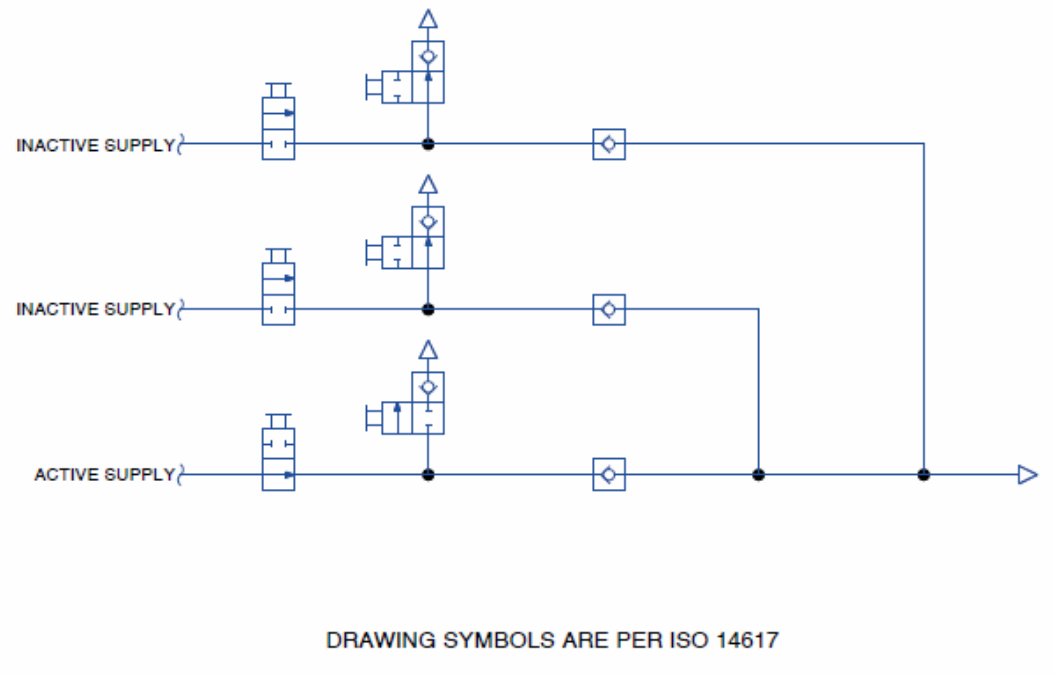

Figure 4: Multiple Fluid System Inlet Configuration

5.5 Vent Systems

a) If a pneumatic ground system requires disposal of hazardous fluids or protection of personnel from other hazards (e.g., excessive noise, high velocity impingement, asphyxiating conditions), a vent system shall be used.

b) Oxidizers and fuels (including vapors in an inert gas stream) shall not be discharged into the same vent system.

c) Vent systems for hazardous fluids other than oxygen shall be equipped with a means of inerting the vent system using a gas (e.g., nitrogen, helium) that is compatible with all interfacing system materials and fluids.

d) Vent system outlets shall be:
   i. conspicuously identified.
   ii. in locations that are normally inaccessible to personnel and prevent personnel hazards due to possible ignition (e.g., hydrogen and oxygen vents).
   iii. designed to prevent mixing of fuel and oxidizer at the discharge point.
   iv. designed to prevent accumulation of vented fluids in dangerous concentrations in areas frequented by personnel or vehicles.
   v. designed to preclude vented fluids from impinging on unprotected personnel.
   vi. designed to prevent personnel exposure to excessive venting noise via mufflers, silencers, or locating vent outlets in areas inaccessible to personnel.
   vii. protected against intrusion by rain and animals (e.g., birds, insects, spiders). *Check valves and/or screens or other methods may be used to meet this requirement. Check valves shall not be used on PRD vent lines.*
   viii. adequately supported to accommodate outlet thrust loads.

e) Vent systems shall be designed to minimize backpressure at the required venting flow rate. Refer to API 520 Part II for guidance on sizing and analyzing PRD vent lines.

f) Except for PRD vent lines, each line venting into a multiple-use vent system shall be protected against back-pressurization by means of a check valve if the upstream system MAWP is less than the potential vent system backpressure, or if the upstream system is not compatible with potential venting fluids.

5.6 Flexibility and Support

a) Tubing shall be supported in accordance with KSC-SPEC-Z-0008 and ASME B31.3.

The support spacing guidance in KSC-SPEC-Z-0008 is intended for in-panel and between panel tubing in a launch environment. It does not fully address long runs of tubing exposed to thermal expansion, pulsation and vibration loads, liquid weight, fluid hammer, PRD thrust loads, etc. KSC-SPEC-Z-0008 and its associated analysis must be reviewed for applicability prior to utilizing the default support spacing values. If a system does not fall within the assumptions and bounds of KSC-SPEC-Z-0008, the designer must refer to ASME B31.3 for design guidance.

b) Piping support types and locations shall be determined by performing a flexibility analysis in accordance with ASME B31.3 (Part 5).

c) If piping/tubing will interface to a large component or pressure vessel, the component or pressure vessel shall be designed for the loading condition imposed by the piping/tubing in accordance with ASME B31.3 or ASME BPVC Section VIII, as applicable. The designer should also ensure that the connecting piping/tubing is properly supported to prevent exceedance of allowable stress within the piping/tubing per ASME B31.3.

d) All supports shall be designed to protect against galvanic corrosion due to dissimilar tube/pipe and support materials.

Tubing and piping that are not located in a corrosive or launch environment may be supported using strut channel (e.g., Unistrut) structures. Tubing and piping that are located in a corrosive or launch environment should be supported using common structural shapes that are better suited to corrosion resistance and launch-induced effects (e.g., vibration and blast loads). In all cases, environmental effects on support structures need to be considered in the system design.

e) Supports for temperature-sensitive systems shall be designed with adequate thermal isolation from ambient conditions (e.g., insulating support materials, spacers, or overwraps) and shall be accounted for in the system's thermal and flexibility analysis.

The flexibility analysis must consider the temperature of the components and tubing/piping at installation.

5.7 Layout, Marking, and Identification

5.7.1 System Layout

a) Pneumatic ground systems should be contained within a panel or enclosure, with manually functioning components (e.g., valve and regulator handles, pressure gauge dials) mounted to the panel or enclosure face.

b) Unless an alternate arrangement is approved in written correspondence by the KSC Engineering Technical Authority, and that correspondence is included in the design documentation prior to fabrication, panel or enclosure mounted pneumatic ground systems shall be arranged so that the nominal flow direction is from left to right when viewed from the front of the panel or enclosure.

In certain installations, it may be impractical or impossible to arrange the flow direction from left to right. In these cases, notes should be added to drawings and flow diagrams to alert users to a non-standard arrangement. Approval of such deviations is required during the design phase to ensure that the configuration and mitigations are properly reviewed and approved.

c) Except for PRD outlets, all inlet and outlet connections to a panel or enclosure should run through a bulkhead fitting on the panel frame or enclosure assembly.

In cases where piping is used for interconnecting lines, or piping and/or pipe components are used within a panel or enclosure, it may be more practical to use pipe connections (e.g., flanges, buttweld hubs) in lieu of bulkhead connections.

d) Inlet and outlet connections shall be spaced far enough from each other so that the identification markings on the front of the panel or enclosure can clearly identify each connection.

5.7.2 Flow Diagram

a) Each pneumatic panel or enclosure shall include a satin anodized aluminum flow diagram representing the panel or enclosure schematic.

b) Black lines shall be used to depict connections between panel-mounted components unless approved by Lead Design Engineer.

c) Components not visible from the front of the panel or enclosure shall be represented with the appropriate black schematic symbol per ISO 14617.

d) Pneumatic systems that are not panel or enclosure mounted shall include a black on satin anodized aluminum flow diagram visible to the system operator.

It is best practice to place the photo schematic near the first inline component of the system.

5.7.3 Components

a) Each mechanical and electromechanical component and interface connection shall be assigned a unique identifier that is depicted on the engineering drawing in accordance with KSC-GP-435, Vol. I.

Bulkhead fittings used as a structural support for components, internal tubing and internal piping do not require additional identifiers.

b) Each mechanical and electromechanical component and interface connection shall be identified on the front of the panel or enclosure, or, for systems that are not panel or enclosure mounted, on the flow diagram described in 5.7.2(d).

c) Each mechanical and electromechanical component and interface connection shall be identified with an ink stamp or stencil as close to the component as possible on the back of the panel or enclosure or support structure, or a dog tag affixed to the component and all components located outdoors shall be identified using two different methods.

Components exposed to the outdoor environment may have their markings degraded or damaged over time. The use of two marking methods reduces the likelihood of components

becoming unidentifiable in the field. An example for components mounted to panels: an ink stamp on the structure and a dog tag affixed to the component would meet the intent. An example for line mounted components without adjacent structure: a stencil on the surface of the adjacent piping/tubing and a dog tag affixed to the component would meet the intent.

d) Mechanical and electromechanical components shall be identified with the component unique identifier and the component's function (e.g., GN2 inlet pressure gauge, accumulator pneumatic pressure test port, GHe vent isolation valve, etc.).

e) Pressure regulators and PRD shall also be identified with their nominal set pressures, including the set pressure tolerance.

f) Interface connections shall be identified with the interface unique identifier, the interface function, the fluid medium, and the nominal operating pressure (e.g., 3000 psig GN2 Inlet, 750 psig GHe Outlet).

5.7.4 Titles and Descriptions

a) Each pneumatic system shall be provided with a functionally descriptive title that is assigned in the engineering drawing and prominently displayed either on the front of the panel or enclosure, or, for systems that are not panel or enclosure mounted, on the flow diagram described in 5.7.2(d).

b) The system title shall include, at a minimum, the name of the system and the engineering drawing number.

5.8 Flow and Thermal Analysis, Verification and Validation (V&V) Testing, and Model Anchoring

a) Pneumatic ground systems shall be analyzed in accordance with KSC-STD-Z-0017.

b) Analysis shall account for heat transfer across susceptible components, connected supports and structure in temperature-sensitive systems.

The use of first order engineering hand calculations and analysis principles for conduction and convection may be used to inform math model heat transfer nodes for enhanced fidelity. In AFT Fathom and Arrow, the use of the heat exchanger nodes allows for hand calculated constant heat rates to be used as inputs to model supports and bulkhead heat fluxes.

c) Pressure, flow, and temperature data shall be collected at key locations during V&V testing activities as determined by the responsible design organization.

The required instrumentation needed to operate a system may not be sufficient for analysis model grounding to accurately predict system performance beyond the test day conditions. The design organization should include a section in the V&V plan for any added instrumentation as needed (e.g. surface temperature measurements on inlet/outlet

of regulators or uninsulated components, additional pressure measurements at vehicle interfaces, or upstream and downstream of orifices and venturis, and/or additional flow meter instrumentation).

d) Systems shall reach steady state conditions for pressure, flow, and temperature prior to collecting V&V analysis grounding data.

Steady state conditions during testing are required for any steady state analysis ground effort. V&V test plans and procedures should include criteria for what constitutes steady state or include steps for design or an analysis engineering to make that determination during the test.

e) V&V test cases shall be selected to maximize pressure and temperature differentials, including exceeding interface requirements limits if the design allows for it.

Test day conditions may have positive or negative effects on the efficacy of a test. The V&V plan should account for this by including test cases that reasonably stress the system's performance to uncover unexpected behaviors, performance and issues (e.g., setting pressure regulators over ICD limits, setting target temperatures above/below ICD requirements, and adding a heater upstream of the GSE to stress maximum inlet temperatures)

f) Ground systems that are modified to change fit, form, or function shall be reanalyzed and all analysis models grounded using new or updated test data.

g) Test setups used for V&V shall include hardware to simulate vehicle impacts to the ground system.

For cases where vehicle backpressure, delta pressure, delta temperature or other conditions affect overall ground system performance, hardware like orifices, external heat loads, or other devices should be used to simulate the conditions at vehicle connections during V&V testing.

5.9 Pressure System Certification

Pneumatic ground systems shall be verified to be in compliance with NASA-STD-8719.17. Refer to Appendix B for guidance.

5.10 Environmental Protection

a) Pneumatic ground systems shall be designed to perform in the natural and induced environments to which they will be subjected during their lifecycles and in accordance with KSC-DE-512-SM.

b) Pneumatic ground systems that require hazardproofing or contain components that cannot withstand exposure to natural or induced environments shall be protected by an enclosure

in accordance with KSC-SPEC-E-0002, equipped with a positive internal pressure purge utilizing purge hardware in accordance with 79K07491.

c) Components requiring an atmospheric reference pressure (e.g., certain types of pressure transducers) installed in an internally-purged enclosure shall be equipped with a means of furnishing the atmospheric reference pressure.

d) Enclosures designed to maintain static positive internal pressure shall not be used in pneumatic ground systems without approval of the KSC Engineering Technical Authority.

5.11 Material Compatibility

Pneumatic ground systems shall be designed and evaluated for material compatibility with the fluid medium in accordance with KSC-DE-512-SM.

5.12 Cleanliness

Surface cleaning of pneumatic ground systems shall be in accordance with KSC-DE-512-SM.

The system designer may consider installing a low point drain for the removal of cleaning solvents following precision cleaning of the system.

5.13 Hydrostatic Test

a) Tube assemblies shall be hydrostatically tested in accordance with KSC-SPEC-Z-0008 prior to final installation in the system.

b) Pipe assemblies shall be individually hydrostatically tested in accordance with ASME B31.3, paragraph 345, prior to final installation in the system.

c) Components, except for fittings meeting the requirements of KSC-GP-425 or SAE AS equivalents and KSC-SPEC-Z-0008 that are provided by a qualified vendor, shall be individually hydrostatically tested in accordance with ASME B31.3, paragraph 345, prior to final installation in the system.

5.14 Leak Test

a) Pneumatic ground systems shall be pneumatically leak tested in accordance with ASME B31.3, paragraph 345, and the Leak Testing of Pressure Vessels and Pressurized Systems (PVS) Above Design Pressure Memorandum of Interpretation (refer to Appendix C).

b) All pneumatic ground system mechanical connections, gasketed joints, seals, etc., shall be leak tested with the system fluid medium, except for hazardous gas systems, which shall be leak tested with a system compatible non-hazardous gas with a density as near as possible to the system fluid medium (e.g., gaseous helium for a gaseous hydrogen system).

c) Leak test solution shall conform to MIL-PRF-25567 Type I or MSFC-SPEC-384.

d) All test points shall be bubble tight for a minimum of one minute after leak test solution is applied. Bubble tight is defined to be no greater than 1 x 10^{-4} standard cubic centimeters per second of the leak test medium.

e) All surfaces shall be thoroughly rinsed clean of test solution using deionized water immediately upon completion of the leak test.

f) If bubble leak testing as described above is impractical, a pressure decay test shall be used as an alternate with the pass/fail criteria defined in the design documentation.

5.15 Quality Assurance

5.15.1 Acceptance Test

Acceptance testing of pneumatic ground systems shall include leak and functional testing, including at a minimum verification of regulator function, operation of manual and remote valves, checkout of electrical components and cables, and proper orientation of check valves.

5.15.2 Acceptance Data Packages

All pneumatic ground systems shall be provided with an Acceptance Data Package in accordance with KDP-P-5042 or other NASA-approved standard, and shall also include, at a minimum, the following documentation as applicable:

i. As-built shop drawings and schematics
ii. Requests for information and deviation/waiver requests
iii. Material and component certifications
iv. Welding procedures, weld procedure qualification, welder certifications, welder continuity records, weld log, weld inspection reports, weld inspector qualifications, radiographic test film or digital media, and weld maps
v. Protective coating inspection reports
vi. Cleaning procedure and record
vii. Hydrostatic test procedure and record
viii. Acceptance test procedure and record
ix. Material inspection receiving report (e.g., Form DD250)
x. Analyses (structural, fluid flow)

5.16 Packaging, Handling, and Transportation

Packaging, handling, and transportation of pneumatic ground systems shall be in accordance with KSC-DE-512-SM.

6 NOTES

6.1 Intended Use

This standard defines the requirements for design of pneumatic ground systems and does not constitute a specification for the procurement, fabrication, or installation of the system or components.

6.2 Citation Data

Contract documents should cite this specification by number, title, and date. Drawings should cite this specification by number in a general note.

NOTICE: When Government drawings, specifications, or other data are used for any purpose other than in connection with definitely related Government procurement operation, the United States Government thereby incurs no responsibility nor any obligation whatsoever; and the fact that the Government may have formulated, furnished, or in any way supplied the said drawings, specifications, or other data is not to be regarded by implication or otherwise as in any manner licensing the holder or any other person or corporation, or conveying any rights or permission to manufacture, use, or sell any patented invention that may in any way be related thereto.

Custodian:	Preparing Activity:
NASA – John F. Kennedy Space Center Kennedy Space Center, Florida 32899	John F. Kennedy Space Center Engineering Directorate

APPENDIX A. RELIEF VALVE INSTALLATION ANALYSIS METHODOLOGY

This appendix provides standardized and approved (see KSMAB-26-010) methods to evaluate PRD installations in accordance with API 520 Part II. Each installation shall demonstrate compliance with paragraph 4.4 the following criteria:

1. Non-recoverable inlet pressure losses should not exceed 3% of the PRD set pressure (see A.I). Otherwise, the installation shall pass both the force balance (see A.IV) and acoustic interaction (see A.V) assessments.
   The designer should make every effort to meet the 3% rule. Reducing inlet line length, increasing inlet line diameter, and reducing PRD rated capacity are possible design solutions to reduce inlet pressure losses.
2. The pressure in the circuit shall not exceed 110% of MAWP of any component in the circuit (see A.II).
   Component MAWP are always at least the same as, but often greater than, the PRD set pressure.
3. For conventional spring-loaded PRD, the outlet pressure differential should not exceed 10% of the PRD set pressure (see A.III). Otherwise, a vendor-provided PRD capacity correction factor shall be applied, and the resulting PRD rated flow capacity shall be reevaluated against the system required flow rate.
   The designer should consider other solutions first, including increasing outlet line diameter or selecting a balanced bellows or pilot-operated PRD. Many vendors do not provide capacity correction factor data. Applying capacity correction factors is an uncommon and undesirable practice and is not permitted for PRD that protect pressure vessels.

Some of the evaluation methods provided assume the use of Datacor Arrow compressible flow modeling software. Other software or analysis methods, such as Fanno flow-based hand calculations, may also be used to perform those evaluations. The force balance and acoustic interaction evaluations may be performed using K0000604564-ANA or similar hand calculations.

Additional background and supporting documentation can be found in the KSC Engineering Relief Valve Evaluation and Action Plan (K0000609834-GEN).

I. INLET LOSS EVALUATION (3% RULE)

1. Use a flow rate node to represent the PRD inlet as shown in Figure 5. Set the flow rate to the PRD rated capacity.
2. Use a pressure node to represent the location of the PRD piping connection to the process line or pressure vessel as shown in Figure 5. Set the stagnation pressure to the nominal PRD set pressure (in psig).
3. Connect the flow rate and pressure nodes with a pipe segment using the installed tube inner diameter, length, and surface roughness.
4. Bends and elbows can be modeled as embedded losses within the pipe segment, but place area change nodes (abrupt transition) where expansions or contractions are located on the hardware. Area change nodes can be excluded if they are directly on a pressure source outlet other than a pressure vessel.
   Pressure vessel outlet ports should not be smaller than the size of the line connecting to the PRD that protects the pressure vessel.
5. Run the model with the pressure output in psia.
6. Compare the stagnation pressures at the flow rate and pressure nodes. If the difference of the stagnation pressures is no more than 3% of PRD set pressure, the PRD installation is compliant with the 3% rule. Otherwise, an additional assessment (e.g., force balance and acoustic interaction) is required.

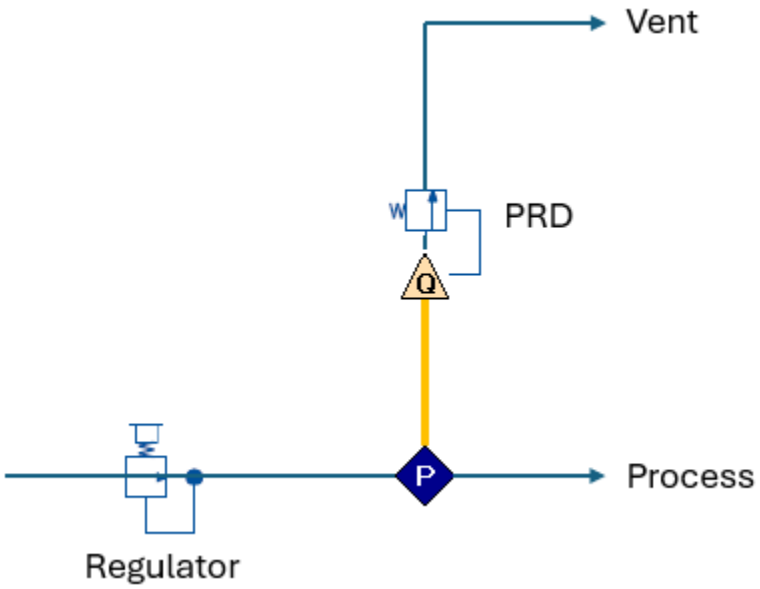

Figure 5: Example of Recommended Inlet Loss Evaluation Model

II. COMPONENT MAXIMIUM ALLOWABLE WORKING PRESSURE EVALULATION

1. Use a flow rate node to represent the pressure source outlet as shown in Figure 6. Set the flow rate to the required flow rate (the maximum flow rate of a failed open regulator or other flow-controlling component, or the PRD flow capacity for PRD protecting a pressure vessel).
2. Use a pressure node to represent the PRD inlet as shown in Figure 6. Set the stagnation pressure to the nominal PRD set pressure (in psig).
3. Connect the flow rate and pressure nodes with a pipe segment using the installed tube inner diameter, length, and surface roughness.
4. Bends and elbows can be modeled as embedded losses within the pipe segment, but place area change nodes (abrupt transition) where expansions are located on the hardware. Area change nodes can be excluded if they are directly on a pressure source outlet other than a pressure vessel.
   Pressure vessel outlet ports should not be smaller than the size of the line connecting to the PRD that protects the pressure vessel.
5. Run the model with the pressure output in psia.
6. Compare the stagnation pressure at the pressure source outlet to the MAWP of the lowest rated component in that portion of the system (in psia). If the stagnation pressure at the pressure source outlet is no more than 110% of the MAWP, or 3 psi, whichever is greater, then the PRD circuit is compliant with the MAWP evaluation. Otherwise, component changes or inlet installation redesign is required.

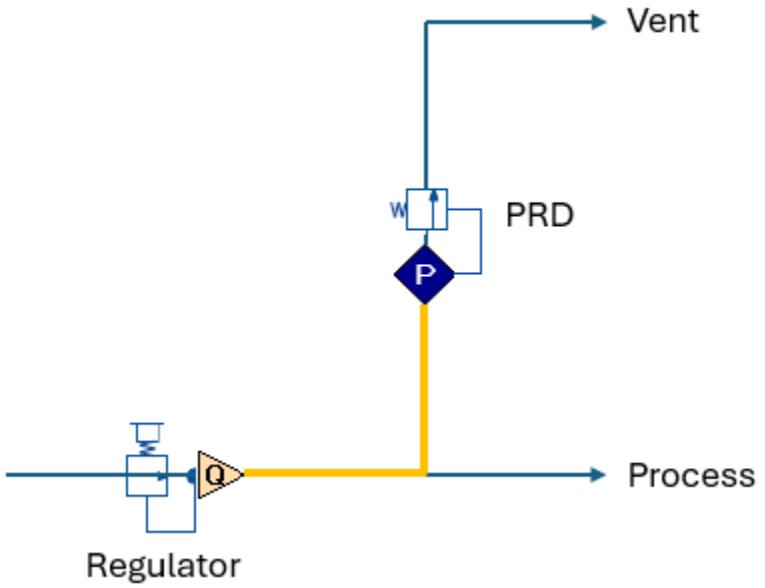

Figure 6: Example of Recommended Component MAWP Evaluation Model

III. BACKPRESSURE EVALUATION

1. Use a flow rate node to represent the PRD outlet as shown in Figure 7. Set the flow rate to the PRD rated capacity.
2. Use a pressure node to represent the vent system outlet as shown in Figure 7. Set the stagnation pressure to 0 psig.
3. Connect the flow rate and pressure nodes with a pipe segment using the installed tube inner diameter, length, and surface roughness.
4. Bends and elbows can be modeled as embedded losses within the pipe segment, but place area change nodes (abrupt transition) where expansions are located on the hardware. This includes expanders installed directly on the PRD outlet; include a short pipe segment for the path from the expansion point to the PRD outlet).
5. Run the model with the pressure output in psia.
6. Compare the stagnation pressures at the flow rate node (PRD outlet) and the PRD set pressure (in psia). If the stagnation pressure at the PRD outlet is no more than 10% of the PRD set pressure, then the relief vent line is compliant with the backpressure evaluation. Otherwise, vent line redesign or application of a backpressure capacity correction factor (if applicable) is required.
   PRDs with set pressures less than 15psig that fail the back pressure check will need to be evaluated on a case by case basis for acceptability.

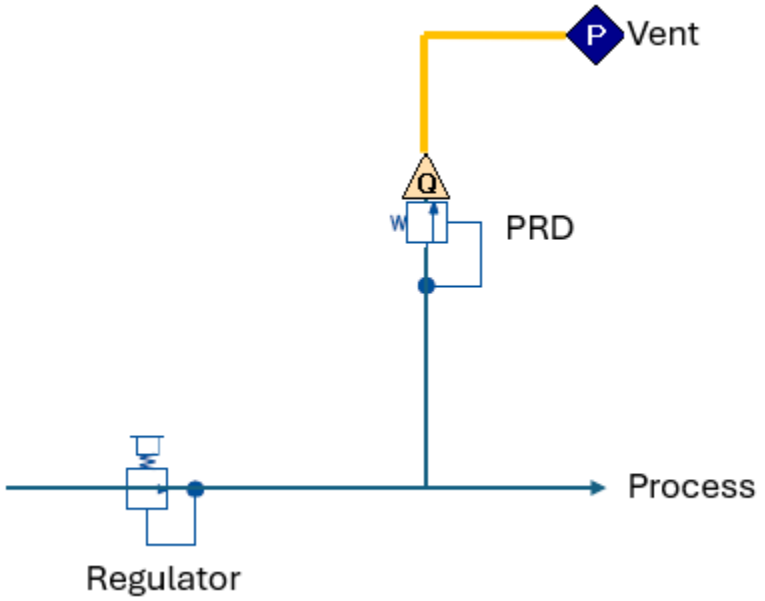

Figure 7: Example of Recommended Backpressure Evaluation Model

IV. FORCE BALANCE EVALUATION

If the inequality below is true, the PRD installation is compliant with the force balance requirement:

$$P_{Open} - \Delta P_{f,Wave} - \Delta P_{Wave} - \Delta P_{built-up} > P_{Close}$$

The above inequality is used with conventional unbalanced relief valves. For balanced bellows relief valves see API 520 Part II "Engineering Analysis" for the appropriate equation.

Below are a set of detailed steps on how to evaluate this inequality. API TR 522 has additional examples on how to perform this analysis using other methods.

1. Obtain the following PRD and installation information:

   L: Physical inlet pipe length from process line to PRD

   A_p: Inlet line inside pipe area (in^2)

   ΔP_f: Non-recoverable frictional inlet pressure loss (from A.1) (psi)

   $P_{built-up}$: Built-up backpressure (from A.III) (psi)

   T: Relief temperature (R)

   P_{Set}: PRD set pressure ($psig$)

   $P_{Open} = P_{Set} * 1.1 + 14.7$ ($psia$)

   k_s: Spring constant $\left(\frac{lb}{in}\right)$

   m_D: PRD mass in motion (lb_m)

   P_{Close}: PRD closing pressure ($psig$)

   $\dot{m}$: rated capacity of PRD from NB-18 (lb_m/s)

   M: Molecular weight $\left(\frac{lbm}{lbmol}\right)$

   ρ_o: Source gas density at P_{Open} (lb_m/ft^3)

   Z: Compressibility factor (Typically 1)

   K_v: Isentropic expansion coefficient
   R: Universal Gas Constant (10.731 $\frac{ft^3 psi}{R\ lbmol}$)

2. Determine the speed of sound in the gas at the PRD inlet c_o (*ft/s*):

$$c_o = 68.06\sqrt{\frac{K_v ZRT}{M}}$$

3. Estimate the PRD opening time:

$$f_n = \frac{1}{0.3198}\sqrt{\frac{k_s}{m_D}}$$

$$t_{open} \approx \frac{1}{2f_n}$$

$$t_{open,d} = \frac{t_{open}}{\sqrt{1-\xi^2}}$$

f_n: Natural frequency of the valve (Hz)

t_{open}: Undamped valve opening time (s)

$t_{open,d}$: Damped opening time (s)

ξ: Damping Coefficient (dimensionless) [0.5]

4. Calculate the inlet line pressure drop ΔP_{wave}

$$\Delta P_{wave} = 3.108 \times 10^{-2}\tau\frac{c_o \times \dot{m}}{A_p} + 2.2378\tau^2\frac{\dot{m}^2}{\rho_o \times {A_p}^2}$$

$$\tau = min\left(\frac{t_{wave}}{t_{open,d}}, 1\right)$$

τ: Ratio of wave travel time to damped valve opening time

t_{wave}: Wave travel time, $t_{wave} = 2\frac{L}{c_o}$

5. Calculate the inlet line pressure drop $\Delta P_{f,wave}$:

$$\Delta P_{f,Wave} = \tau^2 \Delta P_f$$

V. ACOUSTIC INTERACTION EVALUATION

If the inequality below is true, the PRD will be prone to chatter and shall be redesigned:

$$0.8L_{crit} < L < 1.2L_{crit}$$

Where:

$$L_{crit} = \frac{c_o}{4f_n}$$

L_{crit}: Critical inlet line length (ft)

L: Inlet line length (ft)

f_n: PRD natural frequency (from A.IV)

c_o: Speed of sound $\left(\frac{ft}{s}\right)$ (from A.IV)

A non-compliant condition can be corrected by changing the inlet line length or selecting a PRD with a different natural frequency. Since increasing the inlet length increases inlet losses and makes the PRD prone to cycling, decreasing the inlet length is generally the best solution.

APPENDIX B. PRESSURE SYSTEM CERTIFICATION

I. CERTIFICATION OUTLINE AND REQUIRED PRODUCTS

A general outline and required products for a PVS Certification Report are detailed below:

- **Scope of certification:** fluid medium/media, MAWP, design temperature range.
- **System boundaries:** mechanical find numbers that define the boundaries of each pressure circuit (e.g., where the system begins, where MAWP changes, where the system ends).
- **Comprehensive integrity assessment:** verification of compliance with applicable national consensus standard (NCS) (e.g., ASME B31.3, ASME BPVC-VIII).
    - **Pressure relief device analysis:** verification that for each PRD, flow capacity exceeds maximum flow rate in failure scenario (e.g., regulator fails fully open), pressure drop from flow source (e.g., regulator outlet) to PRD inlet does not exceed 7% of PRD set pressure (or 10% of PRD set pressure minus PRD set pressure tolerance), vent line backpressure does not exceed 10% of PRD setting (or PRD flow capacity reduction factor is known and acceptable for system).
    - **Flexibility analysis:** verification that piping, tubing, and components are adequately supported for the system's environmental loads and per applicable NCS (e.g., ASME B31.3, paragraphs 319 and 321).
    - **Material compatibility:** verification that all wetted materials are compatible with the fluid medium (e.g., oxygen compatibility assessment)
    - **Pressure vessel documentation:** NBBI registration number, ASME U-1 form, photograph of vessel nameplate
    - **Material certifications for pipe, tube, and fittings**
    - **Fluid component specifications:** materials, MAWP, hydrostatic/proof pressure, design code/burst pressure.
    - **Welding documentation:** Welding Procedure Specifications (WPS), Procedure Qualification Records (PQR), Welder Performance Qualifications (WPQ), weld maps, weld inspector certifications, and weld inspection reports
    - **Hydrostatic and leak tests:** verification that tube assemblies have been hydrostatically tested per KSC-SPEC-Z-0008, and that other components and the system have been leak tested per applicable NCS (e.g., ASME B31.3, paragraph 345).
    - **Visual inspections:** verification that the system design documentation matches the as-built condition.
- **Initial service life and remaining life assessment** (see example)
- **Risk assessment code determination** (see example)
- **In-service inspection plan** (see example)

II. EXAMPLE INITIAL SERVICE LIFE AND REMAINING LIFE ASSESSMENT

This assessment does not consider stress concentrations due to bends or fittings, residual stresses in welded tubing, or damage mechanisms other than pressure cycles. Other damage mechanisms, if applicable to the system being evaluated, must be considered in the remaining life assessment.

Tube assemblies in the [XXX] system are fabricated in accordance with KSC-SPEC-Z-0008, and may be analyzed for fatigue using KSC-5500-10739. The analysis calculates the number of full pressure cycles required to propagate an existing crack from a crack depth to wall thickness ratio (a/t) of 0.7 to 0.8, assuming a crack depth to width ratio (a/c) of 0.5.

Assuming 75 pressure cycles per year (one pressure cycle per day, five days per week, 15 weeks per year), the remaining life of the [XXX] system tubing is summarized below:

Tubing Size (OD x schedule)	Design Pressure (psig)	MAWP (psig)	Initial Service Life (cycles)	Cycles to Date (cycles)	Remaining Life of Tubing (cycles)	Remaining Life of Tubing (years)
1/4” x .035”	880	6195	No Limit*	2	No Limit	No Limit
1/2” x .072”	5868	6100	8538	2	8536	113
3/4” x .109”	5868	6200	7124	2	7122	94
1” x .095”	2500	3900	31362	2	31360	418
1-1/2” x .049”	880	1200	43131	2	43129	575

* According to analysis, threshold stress intensity is never exceeded; crack growth will not occur. Life of tubing cannot be determined using fatigue analysis.

Piping in the [XXX] system was analyzed using NASGRO fatigue crack growth software. Assuming 75 pressure cycles per year, the remaining life of the piping of the [XXX] system is summarized below:

Pipe Size (OD, schedule)	System Design Pressure (psig)	Initial Service Life (cycles)	Cycles to Date (cycles)	Remaining Life of Tubing (cycles)	Remaining Life of Tubing (years)
3” XXS	5868	10103	2	10101	134
2” XXS	5868	38171	2	38169	508
1-1/2” XXS	5868	35382	2	35380	471

Remaining Life

The calculated remaining life of the [XXX] system (94 years) exceeds the maximum allowable remaining life per NASA-STD-8719.17 (40 years). The recertification period is half the remaining life (20 years).

III. EXAMPLE RISK ASSESSMENT CODE DETERMINATION

The [XXX] system is comprised of small bore tubing and components operated at or below their rated pressure and temperature, and the pressure vessels at National Board-registered and being operated at or below their rated pressure and temperature. ASME B31.3 and ASME BPVC-VIII.1 requirements are satisfied. A Reliability and Safety Assessment (reference document number) was performed on the system and did not identify any unmitigated hazards or single failure points.

The Risk Assessment Codes (RAC) were determined in accordance with NASA-STD-8719.17, Section 4.9.2, as follows:

Pressure Vessels

NASA-STD-8719.17, Table 2, Severity Determination: **I, Catastrophic**
NASA-STD-8719.17, Table 4, Item 1: **10^{-6} failures/year**
Total hours pressurized: (15 weeks/year)(5 days/week)(8 hours/day) = **600 hours**
Personnel exposure hours per year: (15 weeks/year)(5 days/week)(8 hours/day) = **600 hours**
Personnel exposure fraction: 600 hours/600 hours = **1.0**
Probability of failure: (10^{-6} failures/year)(1.0) = **10^{-6}**
NASA-STD-8719.17, Table 3, Probability Determination: **E, Improbable**
NASA-STD-8719.17, Table 1, RAC Determination: **4**

Tubing and Components

NASA-STD-8719.17, Table 2, Severity Determination: **I, Catastrophic**
NASA-STD-8719.17, Table 4, Item 10: **10^{-3} failures/year**
Total hours pressurized: (15 weeks/year)(5 days/week)(8 hours/day) = **600 hours**
Personnel exposure hours per year: (15 weeks/year)(5 days/week)(8 hours/day) = **600 hours**
Personnel exposure fraction: 600 hours/600 hours = **1.0**
Probability of failure: (10^{-3} failures/year)(1.0) = **10^{-3}**
NASA-STD-8719.17, Table 3, Probability Determination: **D, Remote**
NASA-STD-8719.17, Table 1, RAC Determination: **3**

IV. EXAMPLE IN-SERVICE INSPECTION PLAN

The [XXX] system was evaluated for likelihood of damage by various mechanisms, as follows:

- Brittle fracture: Low
- Corrosion/erosion: Low
- Crack-like flaws: Low
- Fire damage: Not applicable
- Creep damage: Not applicable
- Mechanical damage: Moderate

The following In-Service Inspection Plan assigns inspection intervals with consideration to the damage mechanisms identified above and meets the intent of API 580. Initial inspections at certification include visual examination, configuration verification, and hydrostatic testing of all tube assemblies to 150% of their maximum allowable working pressure.

Category	Time Interval (Years)						Notes
	1	2	3	5	10	20	
Pressure Vessels	**VE**				**VI**	**RE**	
Pressure Vessel Supports	**VE**					**RE**	
Piping and Supports	**VE**					**RE**	VE per API 570
Flexible Hoses	**VE**			**HY**		**RE**	VE per SAE ARP1658
Relief Valves	**VE**		**FT**		**SI**	**RE**	FT per NASA-STD-8719.17 and NB23, VE per NASA-STD-8719.17, SI per NB23
Pressure Gauges	**VE**		**CA**			**RE**	
Other Components	**VE**					**RE**	VE per API 570

Inspection Legend

CA Calibration
FT Set Pressure Test
HY Hydrostat at MAWP
RE Recertification
SI Service Interval
VE External Visual Examination
VI Internal Visual Examination

APPENDIX C. MEMORANDUM OF INTERPRETATION, LEAK TESTING OF PRESSURE VESSELS AND PRESSURIZED SYSTEMS (PVS) ABOVE DESIGN PRESSURE



National Aeronautics and Space Administration

Kennedy Space Center
Kennedy Space Center, FL 32899

April 28, 2017

Reply to Attn of: MEMORANDUM FOR THE RECORD

LEAK TESTING OF PRESSURE VESSELS AND PRESSURIZED SYSTEMS (PVS) ABOVE DESIGN PRESSURE MEMORANDUM OF INTERPRETATION

1. Problem Statement and Technical Background

To meet American Society of Mechanical Engineers (ASME) B31.3 Section 345, newly-constructed PVS must be leak tested by pressurizing the PVS above "design pressure", defined by ASME B31.3 as "not less than the pressure at the most severe condition of coincident internal or external pressure and temperature". Therefore, the design pressure of a particular PVS segment is in most cases, the set point of the relief valve that protects that segment.

To meet NASA and KSC design standards (e.g., KSC-DE-512-SM, NASA-STD-8719.17), KSC PVS are constructed from listed components in accordance with ASME B31.3, unlisted components that meet one of the criteria of ASME B31.3 paragraph 304.7.2 or components that meet the requirements of another applicable National Consensus Standard (NCS). Tube assemblies are fabricated, tested, and installed in accordance with KSC-SPEC-Z-0008, and all tubing assemblies and many components (e.g. valves, regulators, filters) are hydrostatically tested to 1.5 times the tube or component's maximum allowable working pressure, which is greater than or equal to the design pressure of the PVS in which they are installed.

ASME B31.3 paragraph 345.2.3(a) states, "Components and subassemblies may be leak tested individually". Therefore, the hydrostatic test performed on individual tube assemblies and components meet the requirements of ASME B31.3 paragraph 345.4. However, it was interpreted that to meet the intent of ASME B31.3 that after final assembly, PVS must be leak tested above design pressure again to verify tightness of the mechanical joints formed during assembly. To conduct this leak test required testing to a pressure of 1.5 times design pressure for a hydrostatic test or at least 1.1 times design pressure for a pneumatic test. The additional leak test also entailed removal of relief valves and acquisition of special test equipment to supply the required pressure. This practice introduced several safety-related concerns with performing leak tests, including introducing contamination into previously cleaned PVS, and creating new and unconventional PVS configurations that are not controlled by any drawing release process.

Two key additions were made in the 2016 revision of ASME B31.3, specifically, paragraph 345.2.3 (d) states, "Threaded joints, tubing joints, or a combination of these joints used to connect instruments to previously leak tested piping need not be leak tested in accordance with paragraph 345.1". Paragraph 345.2.3(e) references non-mandatory Appendix F, paragraph F345.2.3, which provides guidance and precautionary considerations for performing additional

leak testing after a subassembly has been taken apart and reassembled, implicitly stating that additional testing is recommended but not required. These additions provide the basis to supersede the previous interpretation from the 2014 revision of ASME B31.3, that after final assembly, the PVS must be leak tested above design pressure again to verify tightness of the mechanical joints formed during assembly.

The benefits of performing additional leak tests of fully-assembled PVS above design pressure do not justify the safety-related concerns introduced. KSC has a well-established process and requirements for designing and fabricating PVS. With Safety and Mission Assurance's guidance provided in this memorandum, the Program or Project Office may choose to exempt PVS from additional leak testing above design pressure. Section 2 provides the conditions under which an owner-operator may make this choice. Section 3 provides a list of inherent risks involving PVS that owner-operators must consider before deciding to exempt any PVS from additional leak testing above design pressure.

2. Exemptions to Leak Testing Assembled PVS Above Design Pressure

The following PVS may be exempted from leak testing above design pressure after full assembly at the discretion of the owner-operator:

- **Unmodified heritage PVS that has been previously certified and placed in service. In accordance with ASME B31.3, Section's 300 and 345,** these PVS do not require evidence of a leak test. Paragraph 300(c) (2) of ASME B31.3 states, "This code is not intended to apply to the operation, examination, inspection, testing, maintenance, or repair of piping that has been placed in service." Paragraph 345.1 states, "Prior to initial operation … each piping system shall be leak tested to ensure tightness." The leak test requirements in Section 345 do not apply retroactively to PVS that have previously been in service and are being used in their original configuration at a new location or for a new purpose. However, these PVS must be leak tested to maximum expected operating pressure prior to being recertified and placed back into service.
- **PVS in Normal Fluid Service per ASME B31.3.** In accordance with ASME B31.3, these PVS may be exempted if all of the following conditions are met:
    a) Components are listed in ASME B31.3 Table 326.1 or Appendix D, meet at least one criterion for unlisted components in ASME B31.3 Section 304.7.2, or meet the requirements of another applicable NCS.
    b) All pipe and tube assemblies have been individually hydrostatically tested to 1.5 times the assembly or component's maximum allowable working pressure.
    c) All joints created during assembly are mechanical (i.e. not joined by welding or brazing).
    d) The fully assembled PVS is leak tested to maximum expected operating pressure. All other PVS must be leak tested above design pressure in accordance with ASME B31.3 Section 345. Additionally, PVS in lethal service[1] must be subjected to a sensitive leak test in accordance with ASME B31.3 Section 345.8.

[1] Lethal service at KSC includes reactive, energetic, and cryogenics fluids. Other methods for performing leak tests may be used after being evaluated and approved by the Pressure Systems Manager.

3. **Risks Inherent to PVS Not Subjected to Additional Leak Testing Above Design Pressure**

The following risks must be considered and accepted by the owner-operator prior to exempting any PVS from additional leak testing above design pressure:

- **PVS may leak if pressurized above design pressure.** This risk can be mitigated by the following:
  a) Set relief valves no higher than the maximum allowable working pressure of the weakest component in a particular PVS segment.
  b) Perform a risk and hazard assessment for the PVS.
  c) Do not use the PVS in lethal service.
- **PVS may have components that have not been properly hydrostatically tested.** This risk can be mitigated by the following:
  a) Put in place a robust configuration management system.
  b) Ensure appropriate documents (e.g., Acceptance Data Packages) provide traceability to hydrostatically-tested components.
- **PVS may have component with suspect materials or workmanship.** This risk can be mitigated by ensuring all PVS components meet the following:
  a) Components are approved by the organization's Design Authority and come from reputable suppliers (such as through the 79K80000 component specification series).
  b) Components are listed in ASME B31.3, meet one of the criteria for unlisted components in ASME B31.3 Section 304.7.2, or meet the requirements of another applicable NCS.
  c) Components are assembled and tested by qualified personnel with appropriate quality assurance oversight.

4. **Alternative Test Methods to Meet Intent of ASME B31.3 for PVS Requiring an Additional Leak Test Above Design Pressure**

If the Fabricator, Lead Designer, Program or Project choose to perform a leak test above operating pressure, then the following methods are acceptable to Safety and Mission Assurance:

- Use a pressure source that cannot exceed the allowable test pressure. This method ensures that the PVS being tested cannot be pressurized beyond the allowable test pressure. This can be accomplished by isolating the PVS to be tested from its normal pressure source, and connecting the inlet of the PVS to a compressed gas bottle or trailer that is supplied at a pressure no greater than 1.33 times design pressure. This allows the leak test to be performed without the cost and schedule delay of replacing all the system relief values for the test.
- Use two pressure-reducing regulators in series. This method, which is frequently utilized in certified laboratory PVS at KSC, ensures that at least two simultaneous component failures (two regulators failed fully open) are required to pressurize the PVS being tested above the allowable test pressure. This can be accomplished by connecting two portable pressure reducing units (PPRU) in series, connecting one PPRU to a regulator on the PVS being tested in series, or utilizing two regulators in

series on the PVS. This method also allows the leak test to be performed without replacing all the system relief valves for the test.

- Additional standard practices also prevent over-pressuring PVS. Regardless of the method used, an orifice will be installed where required to limit the flow rate from the pressure source to no greater than the flow capacity of the vent valves on the PVS being tested. Additionally, downstream portions of the PVS with lower design pressures will be isolated and configured with all vent valves open. These practices ensure that (1) if a closed valve or regulator begins to leak into a downstream segment of the PVS not being tested, that segment cannot be pressurized since it is configured with vent valves open; and (2) in the unlikely event that two regulators fail fully open simultaneously, vent valves on the segment of the PVS being tested can be opened to prevent pressurization beyond the allowable test pressure.

5. Documentation and Approval of Leak Test Configurations

Temporary test configurations to leak test PVS above design pressure may be documented and approved through one of the following processes:

- **PVS Exclusion Request (KSC Form 50-261).** This method can be used if the exclusion request is prepared in accordance with NASA-STD-8719.17, paragraph 4.2.4, Assessed Hazard Exclusion, and signed by the KSC Pressure Systems Manager. A configuration-controlled drawing may be required, at the discretion of the organization's Design Authority and the KSC Pressure Systems Manager. Typical requirements for such an exclusion request include:
  a) Test schematic
  b) Parts list
  c) Component specifications (if not available in a KSC-managed system)
  d) Analysis (such as relief valve sizing calculations, if not included in another configuration-controlled document)
  e) Risk Assessment Code determination
  f) Risk and Hazard Assessment (if not included in another configuration-controlled document)
- **Test configuration sheet in PVS design drawing.** This method can be used for newly-designed PVS that go through a formal design review process (e.g., KDP-P-2713 for standard design reviews). The test configuration must be included in the appropriate design review(s), approved by the organization's Design Authority, and released in the organization's configuration management system (e.g., TechDoc, KDDMS).
- **Separate test configuration drawing.** This method can be used for PVS that have already been reviewed and approved through a formal design review process. The test configuration drawing must go through a formal design review process (e.g., KDP-P-2723 for streamlined design reviews), approved by the organization's Design Authority, and released in the organization's configuration management system.

AGREED:

Eric A. Thaxton 4/28/17

Eric A. Thaxton, Ph.D., P.E. Date
Chief Mechanical Engineer, NE

Alan Dumont 4/28/17

Alan Dumont P.E. Date
Acting Pressure Systems Manager
Branch Chief, SA-E3