KSC-SPEC-Z-0008C
JUNE 13, 1978
SUPERSEDES
KSC-SPEC-Z-0008B

FABRICATION AND INSTALLATION OF FLARED TUBE ASSEMBLIES AND INSTALLATION OF FITTINGS AND FITTING ASSEMBLIES, SPECIFICATION FOR

DESIGN ENGINEERING DIRECTORATE

National Aeronautics and
Space Administration

John F. Kennedy Space Center

KSC-SPEC-Z-0008C

JUNE 13, 1978

FABRICATION AND INSTALLATION OF FLARED TUBE ASSEMBLIES AND INSTALLATION OF FITTINGS AND FITTING ASSEMBLIES, SPECIFICATION FOR

APPROVED:

Raymond L. Clark
Director of Design Engineering

JOHN F. KENNEDY SPACE CENTER, NASA

TABLE OF CONTENTS

Section	Title	Page
1.	SCOPE	1
2.	APPLICABLE DOCUMENTS	1
2.1	Governmental	1
2.1.1	Specifications	1
2.1.2	Standards	2
2.1.3	Publications	2
2.1.4	Drawings	3
2.2	Non-Governmental	3
3.	FABRICATION OF TUBE ASSEMBLIES	3
3.1	General Process Requirements	3
3.1.1	Tubing	3
3.1.2	Fittings	3
3.2	Flaring Operations	3
3.2.1	Formed Flares	3
3.2.1.1	Tubing Preparation	4
3.2.1.2	Flaring Equipment	4
3.2.1.3	Formed Flare Configuration	4
3.2.1.4	Minimum Straight Tube Dimensions	4
3.2.2	Buttweld Flares	4
3.2.2.1	Tubing Preparation	4
3.2.2.2	Machined Flare Fittings (Spuds)	4
3.2.2.3	Welding Equipment	4
3.2.2.4	Spud Sizes	4
3.2.2.5	Minimum Straight Tube Dimensions	6
3.3	Bent-Tube Operations	6
3.3.1	Bending Equipment	6
3.3.2	Dimensions of Bent-Tube Assemblies	6
3.3.3	Tube Flatness (Ovality)	6
3.3.4	Wrinkle Depth	6
3.3.5	Scratch Depth	6
3.4	Welded Fitting Operations	6
3.4.1	Welded Fittings	6
3.4.2	Weld Fitting Configurations	6
3.4.3	Weld Fitting Sizes	11
3.4.4	Tubing Preparation	11
3.4.5	Pressure Limitations	11
3.4.6	Welding Method	11
3.4.7	Weld Inspection	11
3.4.8	In-Place Welding	11
3.5	Pressure/Temperature Requirements - Tube and Fittings	11
3.5.1	Maximum Working Pressure	11
3.5.2	Temperature Range	11
3.5.3	Proof Test Pressure	11
3.5.4	Leak Checking	11

TABLE OF CONTENTS (cont)

Section	Title	Page
3.6	Tubing Size Selection	14
3.6.1	Preferred Tube Size	14
3.6.2	Tubing Size Limitation	14
3.7	Identification of Tube Assemblies	14
4.	INSTALLATION OF TUBE ASSEMBLIES, FITTINGS, FITTING ASSEMBLIES, AND COMPONENTS	14
4.1	Examination of System Components	14
4.2	Cleanliness	14
4.2.1	Cleanliness of Tube Assemblies and Fittings	14
4.2.2	Contamination	14
4.3	Installation Clearances	15
4.3.1	Clearance Between Tubing Runs and Stationary Components	15
4.3.2	Clearance Between Tubing Runs and Moving Components	15
4.3.3	Clearance Between Multiple Tubing Runs	15
4.4	Tube and Fitting Assembly Fit-Up	15
4.4.1	Alignment	15
4.4.2	Length	15
4.4.3	Tightness	15
4.4.4	Visual Check	15
4.5	Tube Supports	15
4.5.1	Support of Tube Assemblies and Fittings	15
4.5.2	Support Installation	15
4.5.3	Support Spacing Within Consoles or Modules	19
4.5.4	Support Spacing Between Consoles and Modules	19
4.5.5	Support Alignment	19
4.6	Component Mounting	19
4.7	Torque Requirements	19
4.7.1	Torque Application Devices	19
4.7.2	Torque Application	21
4.7.3	Erratic Indications	21
4.7.4	Torque Wrench Calibration	23
4.8	Lubrication	23
4.8.1	Optional Requirement	23
4.8.2	New Design	23
4.9	Fittings Into Bosses	23
4.9.1	Installation of Nonpositioning-Type Fittings	23
4.9.2	Installation of Positioning-Type Fittings	24
4.10	Bulkhead-Type Fittings	24
4.10.1	Fitting Styles	24
4.10.2	Pass Throughs	24
4.10.3	Bulkhead Holes	24
4.10.4	Mounting Bulkhead Fittings	24

TABLE OF CONTENTS (cont)

Section	Title	Page
4.11	Fitting and Seal Ring Assembly	26
4.11.1	Assembly of New Parts	26
4.11.2	Disassembly and Assembly for Maintenance, Repair or Modification	27
5.	QUALITY ASSURANCE PROVISIONS	28
5.1	Responsibility for Inspection	28
5.1.1	Performing Activity	28
5.1.2	Contracting Officer	28
5.2	Certification	28
5.2.1	Tube Bending, Flaring, and Welding	28
5.2.2	Torque Wrench Calibration	28
5.3	Examination of Fittings, Tubes, and Fitting Assemblies	28
5.3.1	Alignment (Mechanical Check)	28
5.3.2	Tube Inside Diameter	28
5.3.3	Fittings and Bosses	28
5.3.3.1	Nonpositioning-Type Fittings	30
5.3.3.2	Positioning-Type Fittings	30
5.3.4	Bulkhead-Type Fittings	30
5.3.5	Welded Fittings	30
5.4	Rejection Procedure	30
6.	NOTES	30
6.1	Intended Use	30
6.2	Citation Data	30

LIST OF ILLUSTRATIONS

Figure	Title	Page
1	Wrinkle Depth	10
2	Tube-to-Fitting Misalignment	18
3	Short Tube Gaps	19
4	Support Measurement Method on Bent Tube	21
5	Installation of Nonpositioning-Type Fitting Into Boss	23
6	Installation of Positioning-Type Fitting Into Boss	25
7	Bulkhead Fitting Installation	26
8	Typical Tube Fitting Seal Ring Installation	27

LIST OF TABLES

Table	Title	Page
1	Minimum Lengths of Straight Tube Assemblies (Formed Flares) Shown for Standard Tube Sizes	5
2	Minimum Lengths of Straight Tube Assemblies (Buttweld Flares)	7
3	Minimum Dimensions for Tube Assemblies With 90-Degree Bend for Use Within Consoles and Modules Only	8
4	Minimum Dimensions for Tube Assemblies With 90-Degree or S-Bend for Use With Interconnecting Consoles and Modules Only	9
5	Weld Fitting Configurations	10
6	In-Place Welding Space Allowances	12
7	Pressures for Tube and Fittings at 300 to Minus 320 Degrees F, Types 304 and 316 SST	13
8	Minimum Spacing of Tubes With Formed Flares for Parallel Coplanar Tube Runs With Adjacent Unions	16
9	Minimum Spacing of Tubes With Formed Flares for Parallel Coplanar Tube Runs With Staggered Unions	17
10	Maximum Tube Support Spaces	20
11	Installation Torque	22
12	Test Ball Diameters	29

This specification revision has been approved by the Design Engineering Directorate of the John F. Kennedy Space Center (KSC) and is mandatory for use by KSC and associated contractors.

1. SCOPE

This specification covers the requirements for the fabrication and the installation of 37-degree flared tube assemblies and the installation of 37-degree flared tube fitting assemblies used in fluid pressure systems of KSC.

2. APPLICABLE DOCUMENTS

The following documents of the issue in effect on date of invitation for bids or request for proposal form a part of the specification to the extent specified herein. In the event of conflict between the documents referenced herein and the contents of this specification, the contents of this specification shall be considered a superseding requirement.

2.1 Governmental.

2.1.1 Specifications.

John F. Kennedy Space Center (KSC), NASA

KSC-SPEC-Z-0007	Tubing, Steel, Corrosion Resistant, Seamless, Types 304 and 316
KSC-SPEC-Z-0009	Lubrication, Thread, Corrosion-Resistant Steel Tube Fittings
KSC-SPEC-Z-0016	Automatic Welding, Stainless Steel Pipe and Tubing, Invar 36 Pipe, Carbon Steel Pipe, Aluminum Pipe

George C. Marshall Space Flight Center (MSFC)

MSFC-SPEC-384	Leak Test Compound, Lox Compatible

Federal

GGG-W-645	Wrench, Open End Box (and Box Combination Crowfoot, Ratchet, and Ratchet Crowfoot)
GGG-W-646	Wrench, Open End, Ratchet (TAC pattern) for Tube Fittings, Electrical Cable Terminals and Stuffing Tube Gland Nuts
GGG-W-686	Wrench, Torque

Military

MIL-L-25567	Leak Detection Compound, Oxygen Systems

2.1.2 Standards.

John F. Kennedy Space Center (KSC), NASA

KSC-STD-E-0015	Marking of Ground Support Equipment

George C. Marshall Space Flight Center (MSFC), NASA

MC240	Boss, Standard Dimensions for Straight Thread

Military

MS9461	Ball, Bearing, Precision Grade
MS9956	Packing, Preformed - AMS3668, Seal
MS150451	Ball, Steel, Grade 1
MS28778	Packing, Preformed, Straight Thread Tube Fitting Boss
MS33649	Bosses, Fluid Connection, Internal Straight Thread

Air Force - Navy Aeronautical

AN924	Nut, Plain Hexagon, Tube, Bulkhead and Universal Fitting
AN960	Washer, Flat
AND10050	Bosses, Standard Dimensions for Gasket Seal Straight Thread

2.1.3 Publications.

National Aeronautics and Space Administration (NASA)

NHB 5300.4(1C)	Inspection System Provisions for Aeronautical and Space System Materials, Parts, Components and Services

John F. Kennedy Space Center (KSC), NASA

KSC-GP-425	Engineering Standards
KSC-GP-730	KSC Standards and Calibration Manual

2.1.4 Drawings.

John F. Kennedy Space Center (KSC), NASA

75M04185	Identification Tag, Tubing and Hose Lines
79K80245	Spud, Buttweld
79K80246	Union, Buttweld
79K80247	Ell, 90° Buttweld
79K80248	Tee, Buttweld
79K80249	Ell, 45° Buttweld
79K80265	Spud, Buttweld Reducer-Adapter
79K80266	Union, Buttweld Reducer
79K80267	Cross, Buttweld

(Copies of specifications, standards, drawings, and publications required by contractors in connection with official Government functions should be obtained from the procuring activity or as directed by the Contracting Officer.)

2.2 Non-Governmental.

American Society for Testing and Materials (ASTM)

ASTM A 312	Seamless and Welded Austenitic Stainless Steel Pipe

(Application for copies should be addressed to the American Society for Testing and Materials, 1916 Race Street, Philadelphia, Pa. 19103.)

3. FABRICATION OF TUBE ASSEMBLIES

3.1 General Process Requirements.

3.1.1 Tubing. Unless otherwise specified by KSC Design Engineering, tubing shall conform to KSC-SPEC-Z-0007.

3.1.2 Fittings. Unless otherwise specified by KSC Design Engineering, connections to tube assemblies shall be made by fittings selected from KSC-GP-425 or from drawings 79K80245 through 79K80249 and 79K80265 through 79K80267.

3.2 Flaring Operations. Ends of tubing shall be flared either by forming the tube ends or by welding a machined fitting (spud) with the basic flare shape to a plain tube end.

3.2.1 Formed Flares. A formed flare shall be made by deforming the end of the tubing. Each formed flare necessitates the use of a coupling nut and sleeve

described in GP-425, KC142 and KC143, respectively. For new design, flare forming on tubing with a wall thickness greater than 0.109 inch is restricted to applications that have the specific approval by KSC Design Engineering.

3.2.1.1 Tubing Preparation. Tubing shall be cut to required length with a metal saw, squared, deburred, and chamfered.

NOTE

Tube cutters shall not be used.

3.2.1.2 Flaring Equipment. The choice of method and flaring equipment shall be left to the discretion of the contractor or performing activity, except that all tube flaring equipment using split dies shall have provisions for die adjustments. Such adjustments shall provide alignment within 0.001 inch in the vertical, horizontal, and longitudinal axes.

3.2.1.3 Formed Flare Configuration. The completed formed flare shall conform in every respect to the design requirements of KC154 as described in GP-425. The finished flare shall be free from fins on the back side, cracks, or other defects that would prevent a fluid-tight seal. Fins resulting from the use of split die flaring machines may be removed, but the contour of the back of the flare must not be distorted.

3.2.1.4 Minimum Straight Tube Dimensions. The minimum straight tube lengths for tubes with formed flares are shown on table 1.

3.2.2 Buttweld Flares. Buttwelded flares shall be made using machined fittings (spuds) with the flare form similar to that made on ends of tubing but designed to be welded to tubing ends by automatic welding equipment.

3.2.2.1 Tubing Preparation. Tubes shall be squared and deburred prior to the automatic welding operation. Tubes shall not be chamfered inside or outside. Additionally, approximately 3 inches of the ends shall be degreased.

3.2.2.2 Machined Flare Fittings (Spuds). Machined flare fittings shall conform to KSC drawing 79K80245 or 79K80265.

3.2.2.3 Welding Equipment. Machined flares shall be joined to tube ends by tungsten inert gas (TIG) welds. Welding shall be accomplished by automatic welding equipment similar to that manufactured by Astro-Arc Co. Welding equipment selected shall be approved by KSC design Engineering or Contracting Officer.

NOTE

The tube assembly requires the installation of both coupling nuts prior to welding the second flare. Sleeves are not required.

3.2.2.4 Spud Sizes. Buttweld flare ends per KSC drawings 79K80245 and 79K80265 should only be used with the standard tube sizes described in 3.6.1.

Table 1. Minimum Lengths of Straight Tube Assemblies (Formed Flares) Shown for Standard Tube Sizes

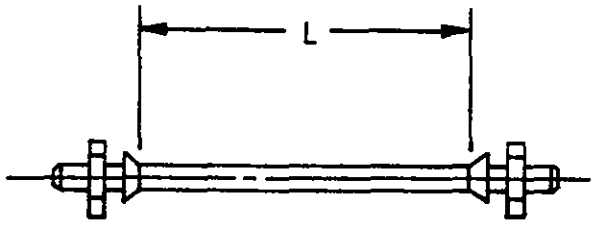

TUBE O.D. & WALL	L
1/4 x 0.035	1-3/4
3/8 x 0.035	2
3/8 x 0.058	2
1/2 x 0.049	2-1/4
1/2 x 0.072	2-1/4
3/4 x 0.065	2-1/2
3/4 x 0.109	2-1/2
1 x 0.095	2-3/4
1-1/4 x 0.049	4-3/4
1-1/2 x 0.049	4-3/4
2 x 0.065	4-3/4

Dimensions are in inches.
"L" Dim. is measured from the base of flared ends.

3.2.2.5 Minimum Straight Tube Dimensions. Tube assemblies with welded flares shall be fabricated to the minimum dimensions shown in table 2.

3.3 Bent-Tube Operations.

3.3.1 Bending Equipment. The choice of bending equipment shall be left to the discretion of the contractor or performing activity.

3.3.2 Dimensions of Bent-Tube Assemblies. The dimensions of bent-tube assemblies are tabulated according to the place of application of the assemblies. The minimum dimensions for 90-degree bent-tube assemblies to be used within consoles or modules are listed in table 3. Bent-tube assemblies to be used between consoles and modules are dimensioned in table 4. Dimensions are [illegible] to and from the base of flared ends along tube centerlines.

3.3.3 Tube Flatness (Ovality). Tube flatness along the length of the bend shall be not greater than 5 percent of the tube diameter for tubing to be used in ground support equipment systems. Tube flatness shall be determined by the following formula:

$$F = \frac{D_1 - D_2}{N} \times 100$$

where:

F = Flatness or ovality (percent)
D_1 = Maximum tube outside diameter
D_2 = Minimum tube outside diameter
N = Nominal tube outside diameter

3.3.4 Wrinkle Depth. Wrinkle depth on the inside of a bend shall be considered as the perpendicular distance measured from a point on an arc that connects two adjacent crests to the bottom of a wrinkle. (See figure 1.) Wrinkle depth shall not be greater than 2 percent of tube outside diameter for sizes up to 3/4 inch and 1 percent of outside diameter for tubes 1 inch and larger.

3.3.5 Scratch Depth. The depth of any scratch or die marks along the length of the bend shall be not greater than 5 percent of the tube wall thickness.

3.4 Welded Fitting Operations.

3.4.1 Welded Fittings. In addition to the welded spuds referred to in 3.2.2, tubes may be joined by welded fittings and they may be used wherever fluid flow or pressure permits, if allowed in lieu of threaded flared fittings by the drawings, specification, or contract.

3.4.2 Weld Fitting Configurations. The weld fitting configurations and their respective specification control drawing numbers are listed in table 5.

Table 2. Minimum Lengths of Straight Tube Assemblies (Buttweld Flares)

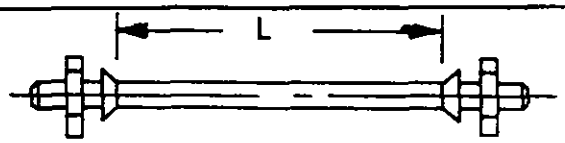

TUBE O.D.	L
1/4	3
3/8	3-1/4
1/2	3-1/2
3/4	4
1	4-1/4
1-1/4	4-1/2
1-1/2	5
2 x 0.065	5-1/2
2 x 0.188	8

Dimensions are in inches.
"L" Dim. is measured between nose of fittings.

Table 3. Minimum Dimensions for Tube Assemblies With 90-Degree Bend for Use Within Consoles and Modules Only

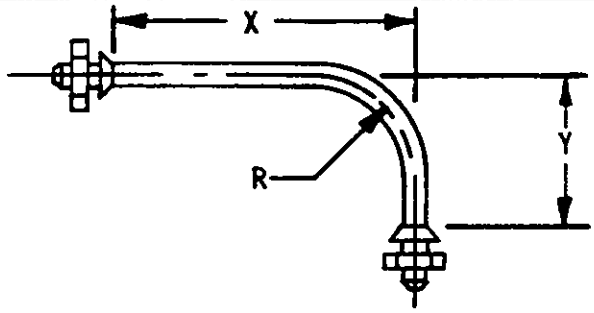

TUBE O.D.	X		Y		R
	FORMED FLARES	BUTTWELD FLARES	FORMED FLARES	BUTTWELD FLARES	
1/4	1-5/8	2-3/4	1-1/8	2-3/4	9/16
3/8	2-1/4	3-1/4	1-5/8	3-1/4	15/16
1/2	2-3/4	3-5/8	2-3/4	3-5/8	1-1/4
3/4	3-3/8	4-3/8	3-3/8	4-3/8	1-3/4
1	4-3/4	5-3/4	4-3/4	5-3/4	3
1-1/4	5-5/8	6-1/2	5-5/8	6-1/2	3-3/4
1-1/2	7-3/8	7-1/2	7	7-1/2	4-1/2
2 x 0.065	8-3/4	9-1/4	7-3/4	9-1/4	6
2 x 0.188	8-3/4	13-1/2	7-3/4	13-1/2	6

Dimensions are in inches
"X" and "Y" dimensions on tubes with formed flares are from base of flared end to extended centerline of tube leg.
"X" and "Y" dimensions on tubes with buttweld flares are from nose of fitting to extended centerline of tube leg.

Table 4. Minimum Dimensions for Tube Assemblies With 90-Degree or S-Band for Use With Interconnecting Consoles and Modules Only

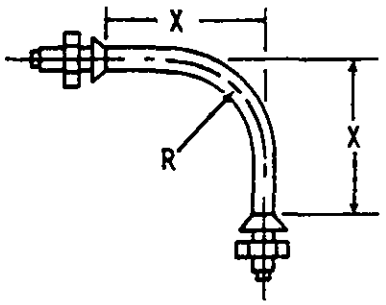

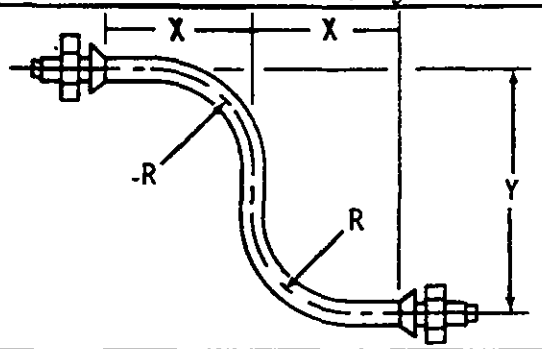

TUBE O.D. & WALL	X		Y		R
	FORMED FLARES	BUTTWELD FLARES	FORMED FLARES	BUTTWELD FLARES	
1/4 x 0.035	2	2-3/4	2-3/4	2-3/4	3/4
3/8 x 0.035	2-1/2	3-1/4	3-7/8	3-7/8	1-1/4
3/8 x 0.058	2-3/4	3-1/4	3-7/8	3-7/8	1-1/4
1/2 x 0.049	3-5/16	3-5/8	5-3/8	5-3/8	2
1/2 x 0.072	4-5/16	3-5/8	5-3/8	5-3/8	2
3/4 x 0.065	4-9/16	4-3/8	7-3/4	7-3/4	3
3/4 x 0.109	5-11/16	4-3/8	7-3/4	7-3/4	3
1 x 0.095	8-1/32	5-3/4	10-1/16	10-1/16	4
1 x 0.120	9-1/4	5-3/4	10-1/16	10-1/16	4
1-1/4 x 0.049	7-21/32	6-1/2	13-3/4	13-3/4	5
1-1/4 x 0.134	8-7/8	6-1/2	13-3/4	13-3/4	5
1-1/2 x 0.049	8-7/8	7-1/2	16-1/2	16-1/2	6
1-1/2 x 0.188	10-3/8	7-1/2	16-1/2	16-1/2	6
2 x 0.065	11	9-1/4	24-1/2	24-1/2	8
2 x 0.188	12-1/2	13-1/2	24-1/2	24-1/2	8

Dimensions are in inches
"X" and "Y" dimensions on tubes with formed flares are from base of flared end to extended centerline of tube leg.
"X" and "Y" dimensions on tubes with buttweld flares are from nose of fitting to extended centerline of tube leg.

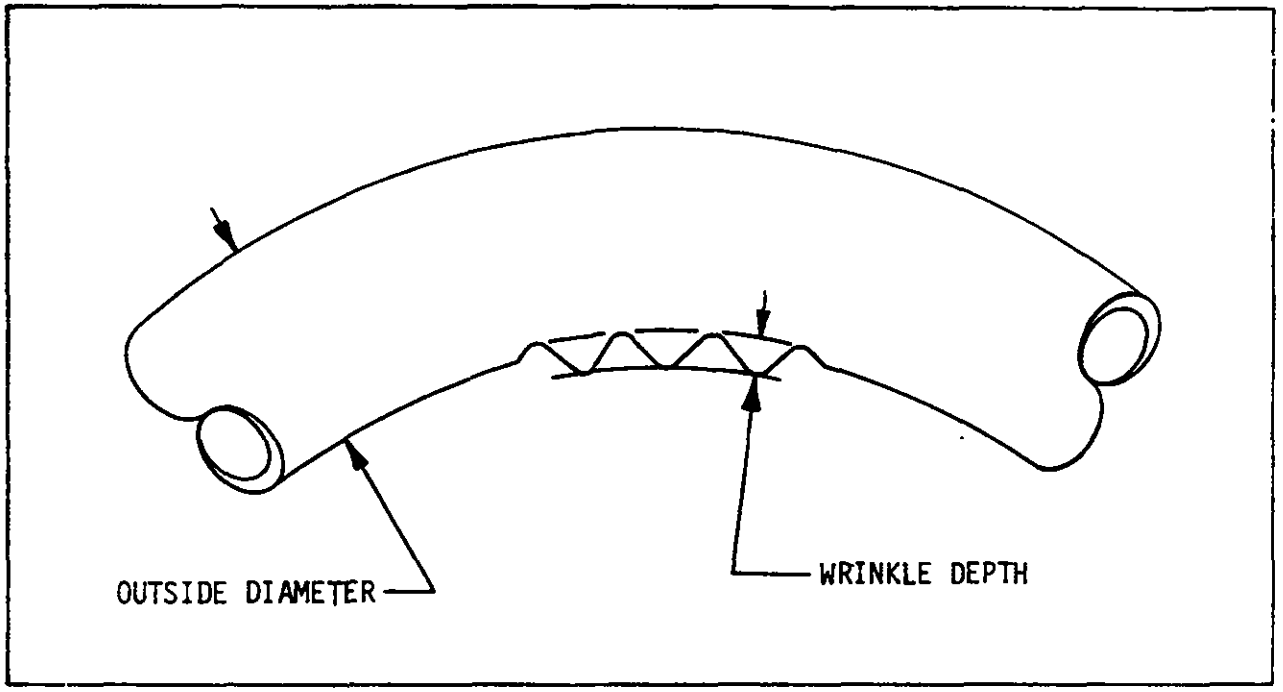

Figure 1. Wrinkle Depth

Table 5. Weld Fitting Configurations

STYLE	SIZE RANGE TUBING O.D. (INCHES)	FITTING KSC DWG NO.
BUTTWELD SPUD	1/4 TO 2	79K80245
BUTTWELD UNION	1/4 TO 2	79K80246
90° BUTTWELD ELL	1/4 TO 2	79K80247
BUTTWELD TEE	1/4 TO 2	79K80248
45° BUTTWELD ELL	1/4 TO 2	79K80249
BUTTWELD REDUCER-ADAPTER SPUD	1/4 TO 2	79K80265
BUTTWELD REDUCER UNION	1/4 TO 2	79K80266
BUTTWELD CROSS	1/4 TO 2	79K80267

3.4.3 Weld Fitting Sizes. Buttweld spuds, unions, ells, tees, and crosses should only be used with the standard tubing sizes shown in table 7.

3.4.4 Tubing Preparation. Tube ends shall be prepared as specified in 3.2.2.1.

3.4.5 Pressure Limitations. Welded fittings shall require the same pressure limitations as that applied to tubing. See 3.5.1.

3.4.6 Welding Method. The shape of the welded fittings provides the weld filler material when fittings are welded to tubing. The welding process shall be TIG using automatic welding equipment. The welding process shall be per KSC-SPEC-Z-0016.

3.4.7 Weld Inspection. Inspection of all welds shall be per KSC-SPEC-Z-0016.

3.4.8 In-Place Welding. The welding head of automatic welding equipment shall have the capability of encircling in-place fluid lines to produce the welded joint. In-place welding may be anticipated for both normal installation of tubes and fittings and for repair work. Table 6 defines space allocation around the various tube sizes for in-place welding.

3.5 Pressure/Temperature Requirements - Tube and Fittings.

3.5.1 Maximum Working Pressure. The maximum working pressure for standard sizes of tube and fittings for continuous use at temperatures indicated in 3.5.2 is tabulated in table 7. Use at higher pressure requires KSC Design Engineering approval.

3.5.2 Temperature Range. The working temperature range shall be between plus 300 and minus 320 degrees F. Use at temperatures beyond these limits requires KSC Design Engineering approval.

3.5.3 Proof Test Pressure. Each completed tube assembly shall be proof tested to the pressures listed in table 7. Deviations require KSC Design Engineering approval. A tube size used for replacement in an existing system shall be tested at its respective proof pressure listed in table 7 regardless of the test pressure specified in the system drawing. Buttwelded tube assemblies comprised of more than one tubing size shall be proof tested to the proof pressure of the lowest rated tube size.

3.5.4 Leak Checking. Tube-to-fitting joints shall be leak checked at the design working pressure. Unless otherwise specified on the design drawings, pneumatic systems shall be tested with MIL-L-25567 type I leak detection compound. MSFC-SPEC-384 leak detection compound shall be used for systems requiring oxygen compatibility. Liquid systems do not require special equipment or compounds to detect leaks. Inert media may be used in lieu of hazardous media for shop leak tests when safety requirements would be compromised. Sensitive detection devices such as mass spectrometers or halogen detectors need not be used unless they are required by the drawings or the acceptance checkout procedure for the equipment under test.

Table 6. In-Place Welding Space Allowances

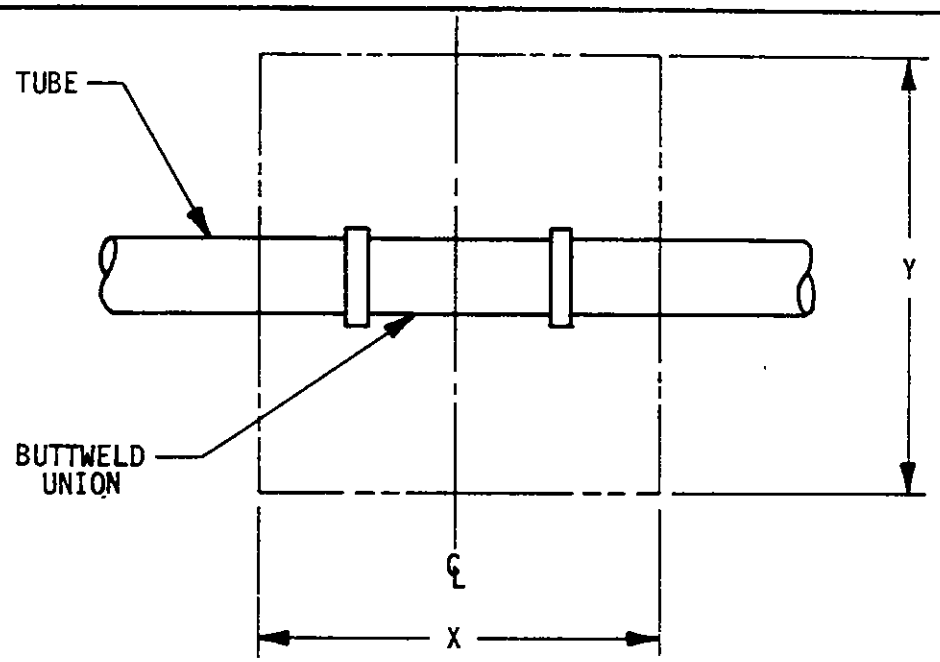

TUBE O.D.	WELDING TOOL ENVELOPE		REPAIR TOOL ENVELOPE	
	X	Y	X	Y
1/4	1-3/4	2	1-1/2	2-1/4
3/8	1-3/4	2	1-5/8	2-1/4
1/2	2-1/4	2-1/4	1-3/4	2-1/4
3/4	2-1/4	2-1/4	2	2-1/4
1	3-1/2	2-1/2	3	3
1-1/4	3-1/2	2-1/2	3-1/4	3
1-1/2	3-1/2	2-1/2	3-1/2	3-1/8
2 x 0.065	4-1/2	3-1/4	2	3-3/8
2 x 0.188	8-1/2	8-1/2	2	3-3/8

Dimensions are in inches

Table 7. Pressures for Tube and Fittings at 300 to Minus 320 Degrees F, Types 304 and 316 SST

TUBE O.D. INCHES	TUBE WALL THK. INCHES	TUBE MAX. WORKING PRESSURE LB/IN^2	TUBE HYDROSTATIC TEST PRESSURE LB/IN^2	FLARED TUBE FITTINGS MAX WORKING PRESSURE LB/IN^2
1/4	0.035**	6000	9000	9600
	0.049	8600	12900	
3/8	0.035**	3800	5700	6900
	0.049	5500	8300	
	0.058**	6700	10100	
	0.065	7500	11300	
1/2	0.035	2800	4200	7400
	0.042	3400	5100	
	0.049**	4000	6000	
	0.058	4900	7400	
	0.065	5500	8300	
	0.072**	6100	9200	
	0.083	7200	10800	
3/4	0.049	2600	3900	6500
	0.058	3000	4500	
	0.065**	3500	5300	
	0.072	4000	6000	
	0.083	4600	6900	
	0.095	5300	8000	
	0.109**	6200	9300	
	0.120	6900	10400	
1	0.065	2600	3900	5300
	0.072	2900	4400	
	0.083	3400	5100	
	0.095**	3900	5900	
	0.109	4500	6800	
	* 0.120**	5000	7500	
1-1/4	0.049**	1500	2300	5200
	0.065	2000	3000	
	0.083	2700	4100	
	0.120	3900	5900	
	* 0.134**	4400	6600	
1-1/2	0.049**	1200	1800	4600
	0.065	1700	2600	
	0.095	2500	3800	
	0.109	2900	4400	
	0.120	3200	4800	
	0.134	3500	5300	
	0.156	4000	6000	
	* 0.188**	5200	7800	
2	0.065**	1300	2000	4600
	* 0.188**	3800	5700	

* This size is not recommended for formed flaring
** Standard size which shall be used for all new designs unless deviation is approved by Design Engineering.

3.6 Tubing Size Selection.

3.6.1 Preferred Tube Size. The tubing wall thickness indicated by a double asterisk in table 7 should be used for all future work on KSC ground support equipment.

NOTE

If flow or pressure requirements cannot be satisfied by the preferred sizes indicated in table 7, use stainless steel pipe of the appropriate size and wall thickness per ASTM A 312.

3.6.2 Tubing Size Limitation. Tubing size with wall thicknesses greater than 0.109 inch are not recommended for form flaring. Machined flares may be used for all tubing outside diameters from 1/4 inch to 2 inches, but are restricted for new design to the preferred sizes shown in table 7.

3.7 Identification of Tube Assemblies. Fabricated tube assemblies shall be identified by an attached metal band per KSC drawing 75M04185 and die stamped or electrochemically etched per KSC-STD-E-0015 with the tube assembly part number or the contractor's tracking number, tube size, test pressure, and date of test. Buttwelded tube assemblies which have more than one tube size shall be identified in the same manner, but the tube size shall not be required. Buttweld tube assemblies which extend over 100 feet in length must have additional metal identification bands spaced at intervals of 100 feet.

4. INSTALLATION OF TUBE ASSEMBLIES, FITTINGS, FITTING ASSEMBLIES, AND COMPONENTS

4.1 Examination of System Components. Prior to installation in a system, sleeves, nuts, tubes, and fittings shall be examined to determine that they are free from damage and that they are properly marked and packaged to maintain the appropriate cleanliness requirements.

4.2 Cleanliness.

4.2.1 Cleanliness of Tube Assemblies and Fittings. Tube assemblies and fittings shall be cleaned to the requirements on the design drawings. Any protective closures (caps, plugs, etc.) shall remain in place after cleaning until the part or assembly is installed.

4.2.2 Contamination. To prevent contamination of a system when an assembly or part is disconnected, all openings shall be capped or plugged immediately.

NOTE

Care must be exercised in removing or replacing closures to prevent depositing plug or cap material in a system.

4.3 Installation Clearances.

4.3.1 Clearance Between Tubing Runs and Stationary Components. Clearance between tubing outside diameter and stationary components shall be 1/8 inch minimum.

4.3.2 Clearance Between Tubing Runs and Moving Components. Clearance between tubing and moving components shall be at least 1/2 inch between the tubing outside diameter and the maximum clearance envelope of the moving component.

4.3.3 Clearance Between Multiple Tubing Runs. For multiple formed flare tube runs, the minimum dimension centerline of tube to centerline of adjacent tube shall be as specified in table 8 or 9. Use table 6 for buttweld welding head and repair tool clearances.

4.4 Tube and Fitting Assembly Fit-Up.

4.4.1 Alignment. The tube assembly shall be placed and aligned so that the flare on the tubing (machined or formed) and the fitting sealing surfaces will meet squarely. Figures 2a and 2b illustrate two sources of misalignment. If properly fitted, the coupling nut shall be moved to the tube end and turned on the fitting to a finger-tight position. The fitting shall be held in a stationary position while the coupling nut is tightened.

4.4.2 Length. In addition to the requirement for flare and fitting to meet squarely, the tube length shall be sufficient to allow contact between flare and fitting sealing surfaces. Figure 3 illustrates undesirable gap between tube and fitting.

4.4.3 Tightness. If properly fitted, the coupling nut shall be moved to the tube end and turned on the fitting to a finger-tight position. The fitting shall be held stationary while torque is applied to the nut per 4.7.

4.4.4 Visual Check. A visual check shall be made to determine whether any mismatch exists between flare and fitting as described in 4.4.1 and 4.4.2. If the assembly is questionable, a mechanical check as specified in 5.3.. shall be performed.

4.5 Tube Supports.

4.5.1 Support of Tube Assemblies and Fittings. All rigid tubing and fitting assemblies shall be supported by suitable holding devices, such as clamps and line blocks.

4.5.2 Support Installation. The installation of clamps and supports shall be specified on design drawings.

Table 8. Minimum Spacing of Tubes With Formed Flares for Parallel Coplanar Tube Runs With Adjacent Unions

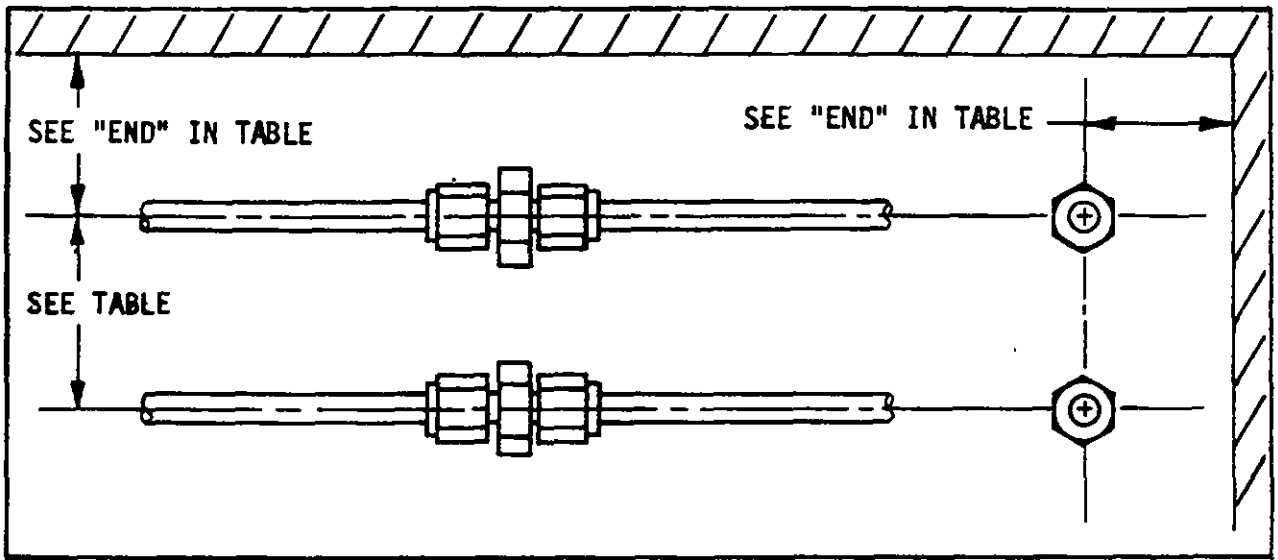

TUBE O.D.	1/4	3/8	1/2	3/4	1	1 1/4	1 1/2	2	END*
1/4	1-3/8								11/16
3/8	1-1/2	1-9/16							3/4
1/2	1-5/8	1-3/4	1-13/16						7/8
3/4	2-1/8	2-3/16	2-5/16	2-1/2					1-3/16
1	2-5/16	2-3/8	2-1/2	2-3/4	2-7/8				1-3/8
1-1/4	2-11/16	2-3/4	2-7/8	3-1/8	3-1/4	3-3/8			1-5/8
1-1/2	3-1/4	3-5/16	3-7/16	3-11/16	3-3/4	3-15/16	4-1/8		1-15/16
2	4	4-1/16	4-3/16	4-3/8	4-9/16	4-11/16	5	5-5/8	2-9/16

Dimensions are in inches
*"End" is defined as the minimum distance from a wall or component to the centerline of an adjacent tube run where wrench clearance is required.

Table 9. Minimum Spacing of Tubes With Formed Flares for Parallel Coplanar Tube Runs With Staggered Unions

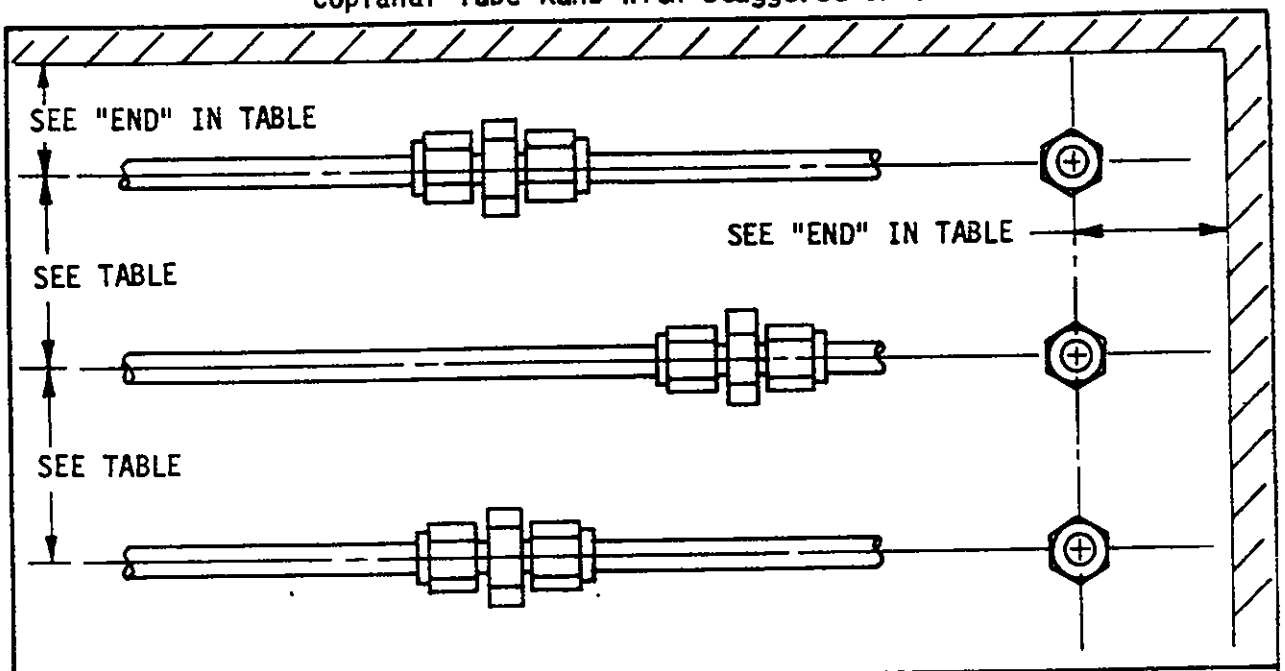

TUBE O.D.	1/4	3/8	1/2	3/4	1	1 1/4	1 1/2	2	END*
1/4	13/16								11/16
3/8	7/8	15/16							3/4
1/2	1	1-1/8	1-3/16						7/8
3/4	1-3/8	1-7/16	1-9/16	1-11/16					1-3/16
1	1-1/2	1-9/16	1-5/8	1-3/4	1-7/8				1-3/8
1-1/4	1-3/4	1-13/16	1-7/8	2	2-1/8	2-1/4			1-5/8
1-1/2	2-1/16	2-1/8	2-3/16	2-5/16	2-7/16	2-9/16	2-11/16		1-15/16
2	2-11/16	2-3/4	2-13/16	2-15/16	3-1/16	3-3/16	3-5/16	3-7/16	2-9/16

Dimensions are in inches
*"End" is defined as the minimum distance from a wall or component to the centerline of an adjacent tube run where wrench clearance is required.

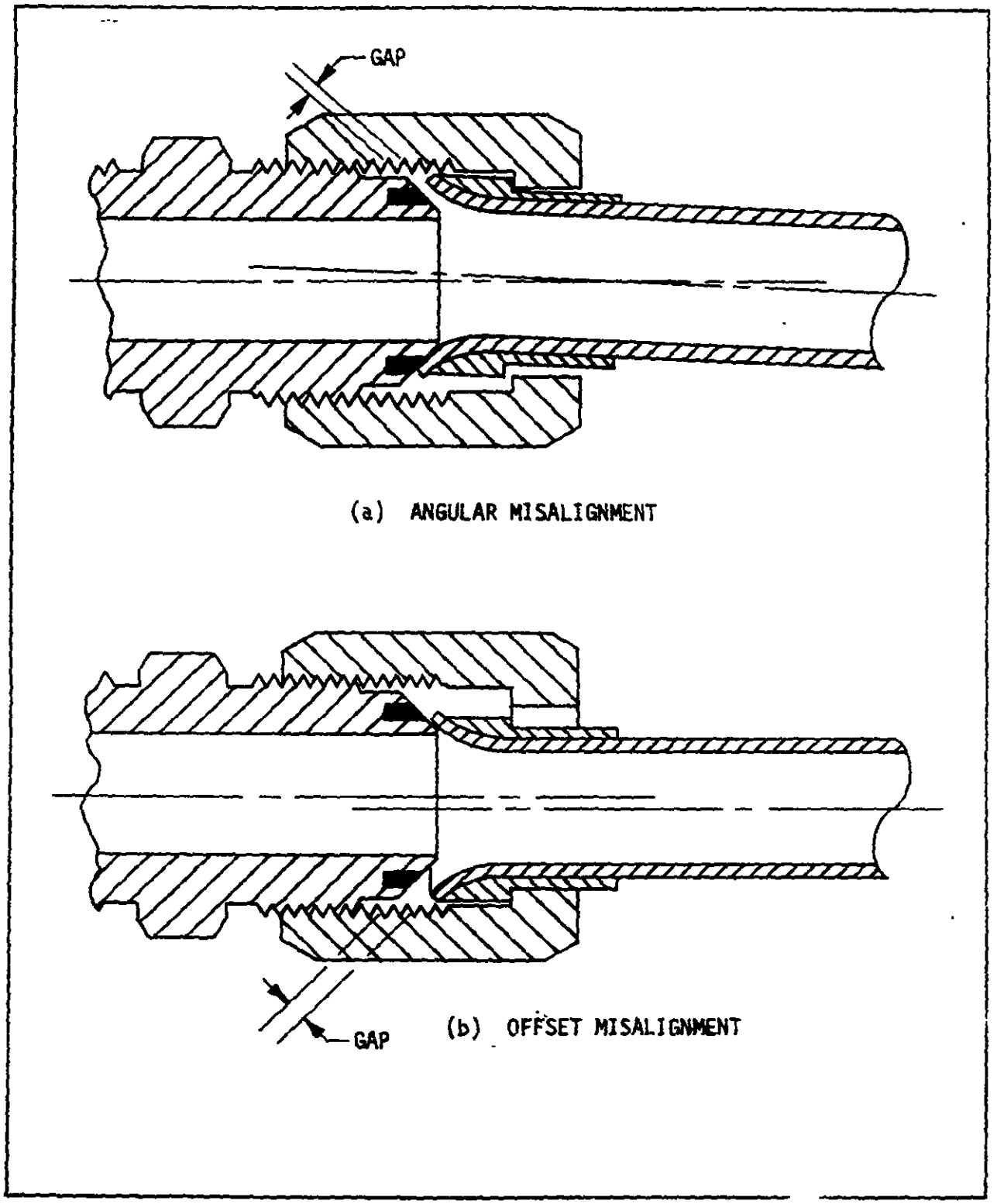

Figure 2. Tube-to-Fitting Misalignment

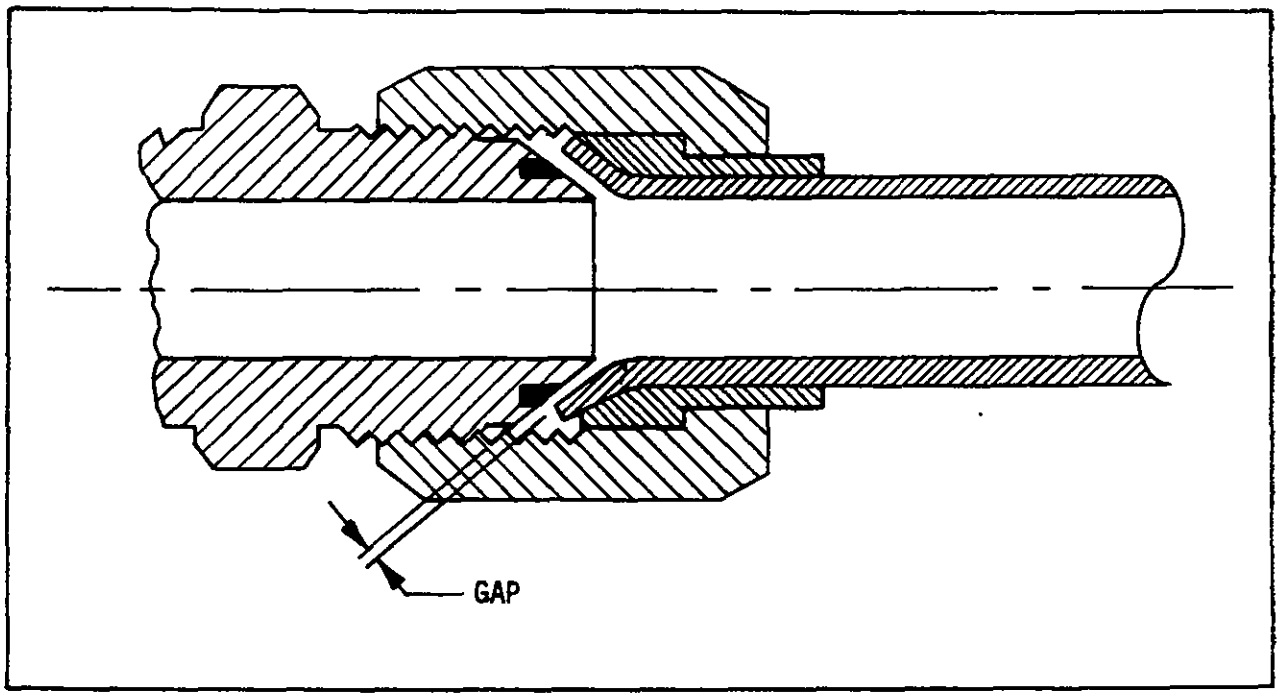

Figure 3. Short Tube Gaps

4.5.3 Support Spacing Within Consoles or Modules. Tube supports within consoles or modules shall be spaced according to the maximum spacing listed in table 10(a). Figure 4 illustrates the method for measuring support distances from tube bends.

4.5.4 Support Spacing Between Consoles and Modules. Tube supports between consoles or modules shall be spaced according to the maximum spacing listed in table 10(b).

4.5.5 Support Alignment. After the tube assembly is connected, the assembly shall be aligned by adjusting supports so it is strain free. No external force shall be applied to the tube assembly to correct such defects as described in 4.4.

4.6 Component Mounting. A component attached to a bulkhead fitting mounted through a supporting structure may not require any additional support. Components shall not be line mounted without approval by KSC Design Engineering.

4.7 Torque Requirements.

4.7.1 Torque Application Devices. Torque wrenches shall conform to GGG-W-686. It is recommended that wrench heads, adapters, plain hand wrenches, and other devices for applying torque conform to the open end box pattern defined by GGG-W-645 and GGG-W-646.

Table 10. Maximum Tube Support Spaces

NOMINAL TUBING DIAMETER (INCHES)	STAINLESS STEEL TUBING. MAXIMUM DISTANCE BETWEEN SUPPORT (INCHES)*
1/4	18
3/8	18
1/2	25
3/4	25
1 AND OVER	30

*One third of the specified distance shall be the maximum distance to unsupported line fittings or to bends greater than 75 degrees. The tube fittings on individually mounted components shall be considered as a tubing support.

(a) Maximum tube support spaces within consoles or modules.

NOMINAL TUBE O.D. (INCHES)	MAXIMUM SUPPORT SPACING - FEET*	
	HORIZONTAL RUNS	VERTICAL RUNS
1/4 thru 3/8	4	5
1/2 thru 3/4	6	7
1 thru 2	9	10

*A support shall be provided within one foot of all fittings such as unions, tees, etc., and tubing bends of greater than 75 degrees. Support spacing utilized for multiple tubing runs shall be based on the smallest tubing size used.

(b) Maximum tube support spaces between consoles or modules.

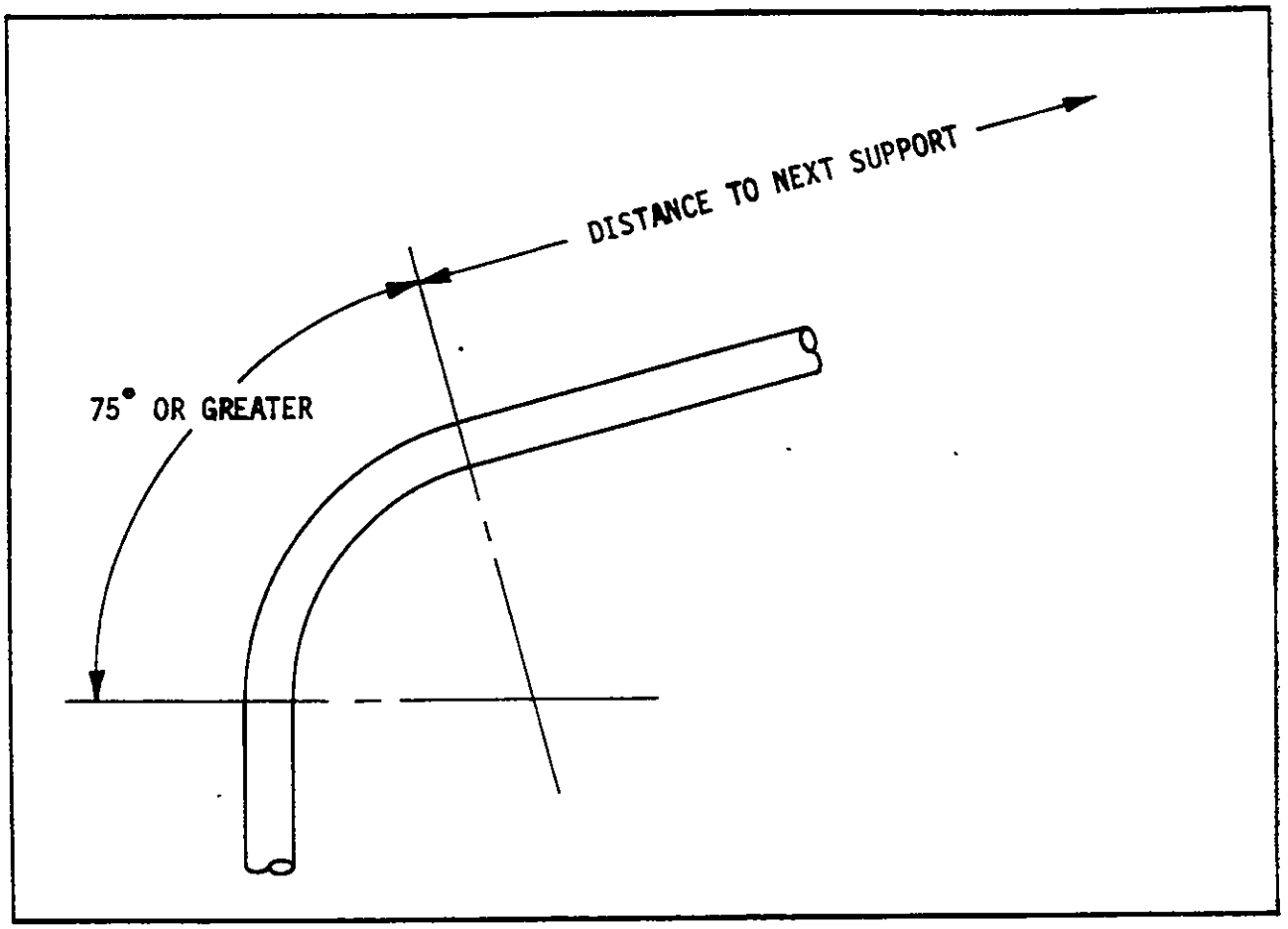

Figure 4. Support Measurement Method on Bent Tube

4.7.2 Torque Application. The specified torque values shall be applied slowly, smoothly, at a uniform rate after mating, to the minimum values in table II. Fittings shall be backed off one-quarter turn and then retightened to the minimum value. If the fitting leaks, vent line pressure and tighten nut to maximum torque. If leakage continues, the joint is defective and must be reworked.

4.7.3 Erratic Indications. When erratic torque indications are observed, the particular components shall be disassembled and checked for galling and other damage (cross-threading, broken coupling nuts, broken sleeves, foreign material, etc.).

Table 11. Installation Torque

	FITTINGS		FITTINGS		TUBE ASSYS		BLKHD FITTINGS	
	KC105 fitting end, KC136 fitting end, or KC138 fitting end with AN924 nut and KC140 washer installed with O-Ring seal in MC240 boss		KC139 nut over KC-137 or KC141 fitting end installed on fitting end per KC104 or KC105		Tube assembly coupling nuts per KC142 installed on fitting end per KC104 or KC105		AN924 locknuts installed on bulkhead fitting end KC104	
APPLICABLE FITTINGS	KC108, 110, 111 112, 113, 114, 115, 119, 120, 124, 125 126, 127, 128, 129, 130, 133, 134, 135, 144, 164		KC106, 107, 109, 131, 132, 150		KC142		KC113, 114, 119, 120, 124, 127, 128, 134, 144	
TUBE O.D.	TORQUE (inch-pounds)		TORQUE (inch-pounds)		TORQUE (inch-pounds)		TORQUE (inch-pounds)	
	Min.	Max.	Min.	Max.	Min.	Max.	Min.	Max.
1/4	55	80	135	185	135	185	75	100
3/8	100	150	270	345	270	345	150	200
1/2	180	230	450	525	450	525	200	250
3/4	420	600	900	1,100	900	1,100	450	650
1	600	840	1,200	1,400	1,200	1,400	650	900
1-1/4	720	960	1,500	1,800	1,500	1,800	800	1,000
1-1/2	840	1,080	2,000	2,300	2,000	2,300	900	1,100
2	1,000	1,300	3,200	3,600	3,200	3,600	900	1,100

4.7.4 Torque Wrench Calibration. Torque wrenches shall be calibrated in accordance with the performance requirements of GGG-W-686, at intervals specified in KSC-GP-730, or whenever damage has occurred. Damaged wrenches shall not be used until they are repaired or recalibrated.

4.8 Lubrication.

4.8.1 Optional Requirement. If not prohibited by design documentation, fitting threads may be lubricated at the option of the installer. Fitting threads, when lubricated, shall be lubricated in accordance with KSC-SPEC-Z-0009.

4.8.2 New Design. New designs shall specify by general note or flag note: "Lubricate tube fitting threads per KSC-SPEC-Z-0009," unless lubrication is not desired. If not desired, design documentation shall specify by general note or flag note: "Do not lubricate tube fitting threads."

4.9 Fittings Into Bosses.

4.9.1 Installation of Nonpositioning-Type Fittings. Nonpositioning-type fittings shall be those fittings that do not require specific orientation when installed in bosses. They employ an O-ring to provide a sealed joint. The O-ring seal shall be protected from damage and carefully installed on the fitting as shown in figure 5(a). The fitting shall be screwed into the boss to the finger-tight position as shown in figure 5(b). The fitting shall then be tightened to the applicable torque value specified in table 11. (See 4.7.) The fitting hex must then be in contact with the surface of the boss.

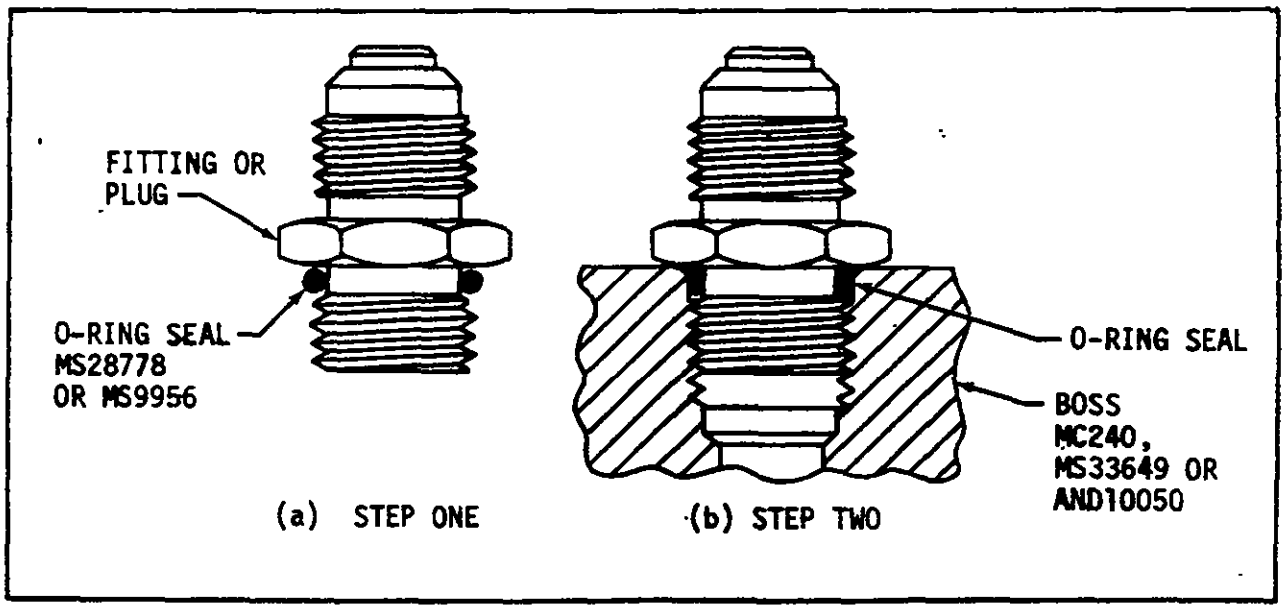

Figure 5. Installation of Nonpositioning-Type Fitting Into Boss

4.9.2 Installation of Positioning-Type Fittings. Positioning-type fittings shall be those fittings that require specific orientation when installed into threaded bosses. In addition to the O-ring seal, they employ a nut and a captive steel backup washer. The procedures as specified below shall be applicable to positioning-type fittings:

a. Run the nut and the captive steel backup washer to the top of the seal groove. The O-ring shall be protected from damage and carefully installed and placed in firm contact with the backup washer. [See figure 6(a).]

b. Screw the fitting-nut-washer-O-ring assembly into the boss as a unit until the O-ring contacts the boss. This point is determined by the sudden increase in torque. [See figure 6(b).]

c. Set fitting direction by turning in as much as 3/4 turn (270 degrees) or backing out as much as 1/4 turn (90 degrees). Hold positioned fitting stationary and tighten the nut to the applicable torque value in table 11. (See 4.7.) The backup washer must now be in contact with the surface of the boss. [See figure 6(c).]

4.10 Bulkhead-Type Fittings.

4.10.1 Fitting Styles. Bulkhead-type fittings shall be those fittings that conform to style E or style S of KC104 in KSC GP-425. For pressures up to 20,000 lb/in^2 in 1/4-inch outside diameter tubing, the bulkhead fittings shall be in accordance with KC169.

4.10.2 Pass Throughs. All bulkhead fittings used as "pass throughs" must be installed with the fixed hex (style E) or shoulder (style S) on the side of the least permanent joint; e.g., on the outside of consoles and modules or at a hose connection side.

4.10.3 Bulkhead Holes. Holes made to accommodate bulkhead fittings shall be a maximum of 0.015 inch over the basic thread diameter of the fittings.

4.10.4 Mounting Bulkhead Fittings. The procedures specified below shall be applicable to those fittings installed in brackets and pressurized or unpressurized modules:

a. The fitting, washer(s), and nut shall be assembled to the bulkhead in the order shown in figure 7. Only one washer is required for the connection if the bulkhead is over 0.125 inch thick.

b. The fitting shall be positioned and held stationary while the nut is tightened to the applicable torque value specified in table 11.

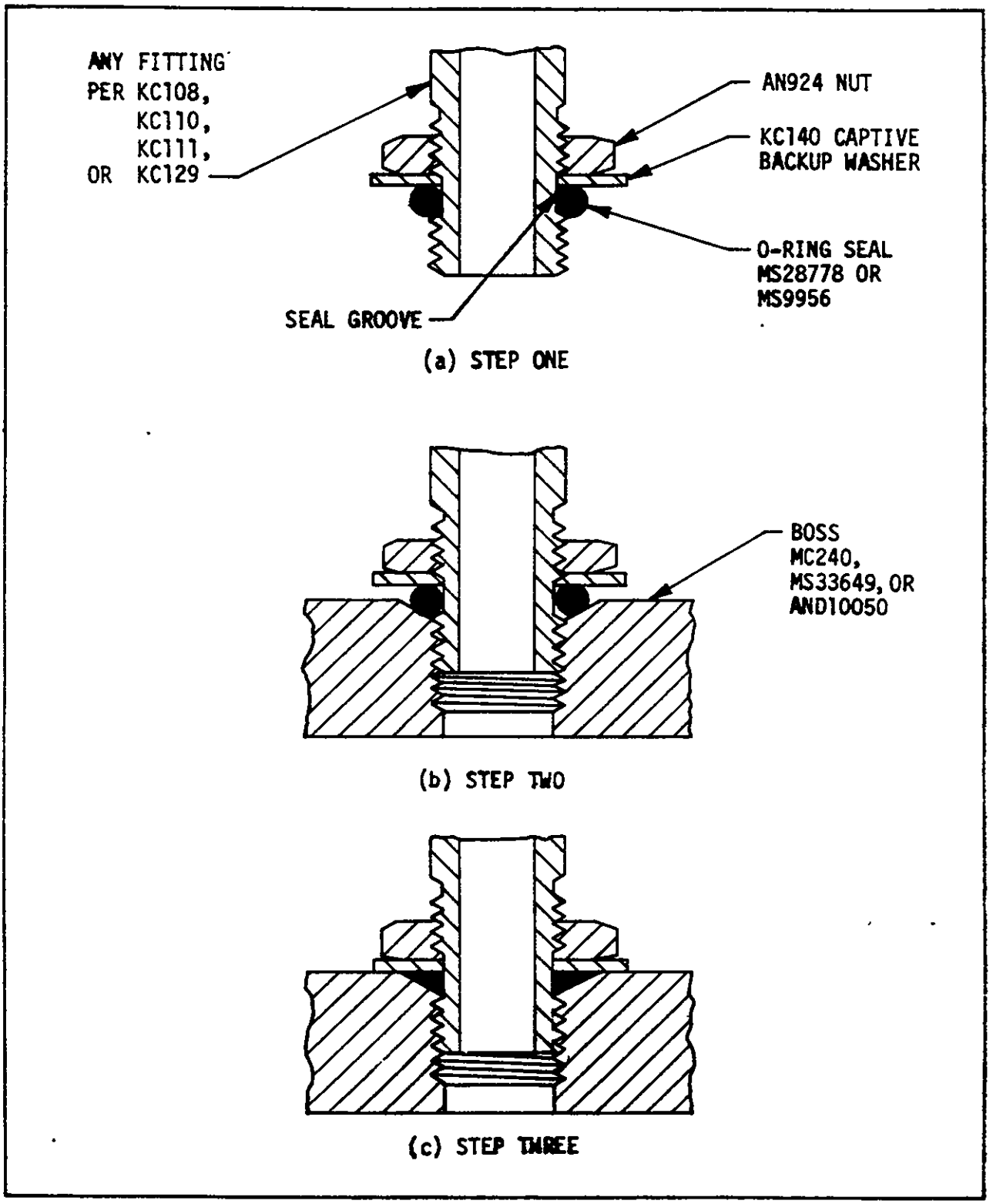

Figure 6. Installation of Positioning-Type Fitting Into Boss

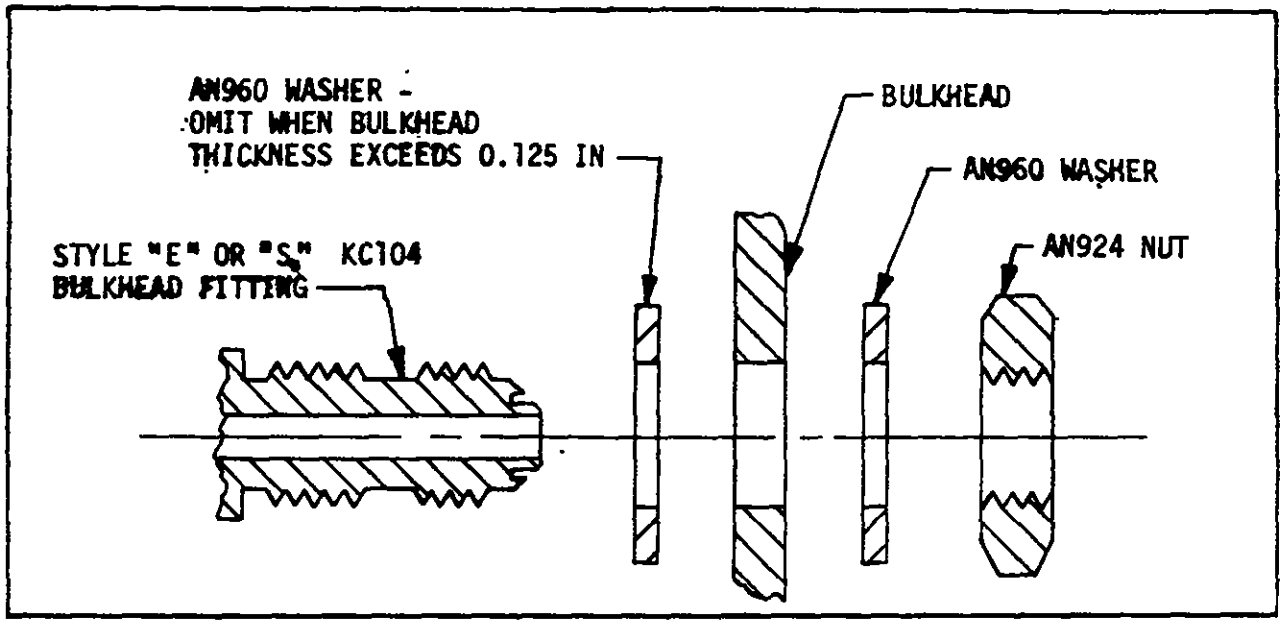

Figure 7. Bulkhead Fitting Installation

4.11 Fitting and Seal Ring Assembly.

4.11.1 Assembly of New Parts. When practical, new KC tube fittings and seal rings should be preassembled from common stock fittings and KC103 seal rings as illustrated in figure 8. Use the following sequence:

a. With the fitting held firmly, select a KC103 seal ring of corresponding dash number to the fitting end and place it on the fitting's flared surface as indicated in figure 8. Verify that the surfaces of the seal ring's chamfer and the fitting's flared surface are parallel and then attempt to manually press the seal ring into the groove using a slight rotary motion.

NOTE

No tools or other devices shall be used to assist in the installation of seal rings.

b. If the seal ring fails to enter the groove with relative ease, remove it and repeat the procedure using another seal ring until one enters the groove properly and perceptibly seats against the bottom of the groove.

NOTE

Seal ring removal shall be done manually, if possible. Only non-metallic instruments may be used to dislodge the seal ring and any particles lodged in the groove.

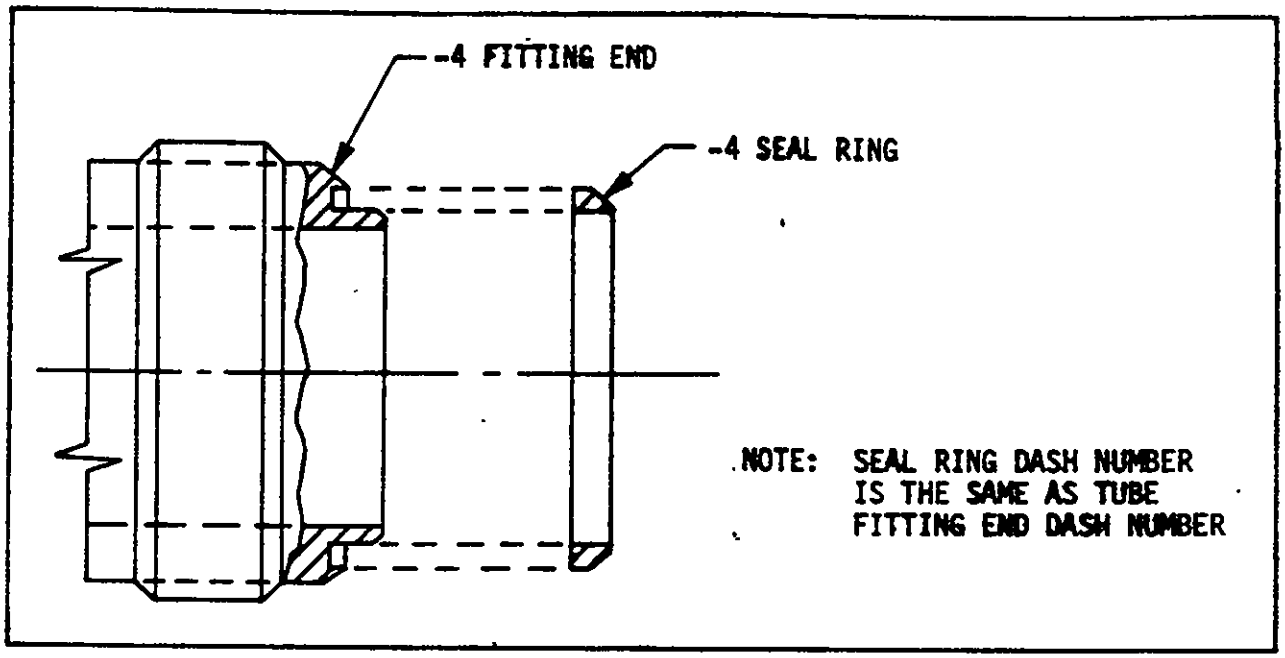

Figure 8. Typical Tube Fitting Seal Ring Installation

c. Visually examine the assembly to ensure that the seal ring's chamfer projects uniformly above the groove around the circumference of the flared surface. If the ring cannot be properly seated, remove it and replace it with another seal ring by the above procedure until one is properly seated. See note under 4.11.1b.

4.11.2 Disassembly and Assembly for Maintenance, Repair or Modification. Tubing assemblies disconnected from KC fittings for any reasons such as maintenance, repair or modification shall be handled as follows:

a. Remove the KC103 seal ring. See note under 4.11.1b.

b. Carefully clean and inspect the groove to ensure that contaminants or particles which might interfere with a new seal ring installation are not present.

c. Select and install a new KC103 seal ring as indicated in paragraph 4.11.1.

5. QUALITY ASSURANCE PROVISIONS

5.1 Responsibility for Inspection.

5.1.1 Performing Activity. The performing activity or contractor shall be responsible for the performance of all inspection requirements as specified herein.

5.1.2 Contracting Officer. The Contracting Officer reserves the right to perform any of the inspections set forth in this specification to assure that the requirements specified herein have been met.

5.2 Certification.

5.2.1 Tube Bending, Flaring, and Welding. The contractor shall certify in writing that his personnel and procedures are capable of meeting the forming and welding requirements specified herein.

5.2.2 Torque Wrench Calibration. Certification of conformance to the requirements of 4.7.4 shall be furnished in writing.

5.3 Examination of Fittings, Tubes, and Fitting Assemblies.

5.3.1 Alignment (Mechanical Check). It shall be ascertained by the following steps that the tube assembly is free of restraint so that relative movement of the ends can be observed.

a. Disengage the coupling nuts at both ends, and disengage the flare from the fitting nose at one end.

b. Tighten the coupling nut finger tight at the other end, allowing the tube assembly to seek its natural position.

c. Observe the orientation of the free end relative to the proper location of the fitting with which it mates.

If the fitting at the free end can be moved and engaged with the tube assembly so that the fitting nose meets the flare squarely without any of the defects shown in figures 2 and 3, the tube assembly is acceptable. No force may be applied to the tube assembly to achieve alignment.

5.3.2 Tube Inside Diameter. The inside diameter of form-flared and bent tubing shall be checked to determine conformance to tube flatness (3.3.3) and wrinkle depth (3.3.4). In addition, to assure other restrictions do not exist, a spherical ball shall be passed through the flared or bent tube. The ball diameter to be used for the specific size tubing undergoing testing shall be selected from table 12. For form-flared and bent-tube assemblies which also contain welded fittings, the ball check must be performed prior to welding.

5.3.3 Fittings and Bosses. Nonpositioning and positioning-type fittings shall be examined for proper installation.

Table 12. Test Ball Diameters

NOMINAL TUBE SIZE	NOMINAL I.D.	TEST BALL DIAMETER DIA = .949 X I.D. NOM.	TEST BALL PART NUMBER
1/4 x 0.035	0.180	0.156 (5/32)	MS150454
1/4 x 0.049	0.152	0.125 (1/8)	MS150453
3/8 x 0.035	0.305	0.281 (9/32)	MS150458
3/8 x 0.049	0.277	0.250 (1/4)	MS150457
3/8 x 0.058	0.259	0.219 (7/32)	MS150456
3/8 x 0.065	0.245	0.219 (7/32)	MS150456
1/2 x 0.035	0.430	0.406 (13/32)	MS150462
1/2 x 0.042	0.416	0.375 (3/8)	MS150461
1/2 x 0.049	0.402	0.375 (3/8)	MS150461
1/2 x 0.058	0.384	0.344 (11/32)	MS150460
1/2 x 0.065	0.370	0.344 (11/32)	MS150460
1/2 x 0.072	0.356	0.312 (5/16)	MS150459
1/2 x 0.083	0.334	0.312 (5/16)	MS150459
3/4 x 0.049	0.652	0.594 (19/32)	MS150468
3/4 x 0.058	0.634	0.594 (19/32)	MS150468
3/4 x 0.065	0.620	0.562 (9/16)	MS150467
3/4 x 0.072	0.606	0.562 (9/16)	MS150467
3/4 x 0.083	0.584	0.531 (17/32)	MS150466
3/4 x 0.095	0.560	0.531 (17/32)	MS150466
3/4 x 0.109	0.532	0.500 (1/2)	MS150465
3/4 x 0.120	0.510	0.469 (15/32)	MS150464
1 x 0.065	0.870	0.812 (13/16)	MS150475
1 x 0.072	0.856	0.812 (13/16)	MS150475
1 x 0.083	0.834	0.781 (25/32)	MS150474
1 x 0.095	0.810	0.750 (3/4)	MS150473
1 x 0.109	0.782	0.719 (23/32)	MS150472
1 x 0.120	0.760	0.719 (23/32)	MS150472
1 1/4 x 0.049	1.152	1.094 (1 3/32)	MS150484
1 1/4 x 0.065	1.120	1.062 (1 1/16)	MS150483
1 1/4 x 0.083	1.084	1.000 (1)	MS150481
1 1/4 x 0.120	1.010	0.938 (15/16)	MS150479
1 1/4 x 0.134	0.982	0.906 (29/32)	MS150478
1 1/2 x 0.049	1.402	1.312 (1 5/16)	SPECIAL
1 1/2 x 0.065	1.370	1.281 (1 9/32)	SPECIAL
1 1/2 x 0.095	1.310	1.219 (1 7/32)	MS150488
1 1/2 x 0.109	1.282	1.187 (1 3/16)	MS150487
1 1/2 x 0.120	1.260	1.187 (1 3/16)	MS150487
1 1/2 x 0.134	1.232	1.156 (1 5/32)	MS150486
1 1/2 x 0.156	1.188	1.094 (1 3/32)	MS150484
1 1/2 x 0.188	1.126	1.031 (1 1/32)	MS150482
2 x 0.065	1.870	1.750 (1 3/4)	MS9461-55
2 x 0.188	1.626	1.500 (1 1/2)	MS9461-47

5.3.3.1 Nonpositioning-Type Fittings. Nonpositioning-type fittings installed into bosses shall be examined to determine conformance to the requirements of 4.9.1.

5.3.3.2 Positioning-Type Fittings. Positioning-type fittings installed into bosses shall be examined to determine conformance to 4.9.2.

5.3.4 Bulkhead-Type Fittings. Bulkhead-type fittings installed in brackets or bulkheads shall be examined to determine conformance to the requirements of 4.10.

5.3.5 Welded Fittings. The identification of a fitting weld, its inspection records, and its test records shall be provided by the contractor or performing activity per KSC-SPEC-Z-0016. The method used for complying with this requirement shall provide a cross-reference that may be readily used for tracing weld to records or records to weld. X-rays shall be provided to KSC by the contractor or performing activity. A suggested method of marking the individual records and radiographs is with the x-ray code mark that is placed on the x-ray film and identifies an individual x-ray with the weld x-rayed.

5.4 Rejection Procedure. Nonconformance to the requirements of this specification shall be cause for rejection. Nonconforming articles shall be reviewed by the Contracting Officer and disposed of according to NHB 5300.4(1C).

6. NOTES

6.1 Intended Use. This specification is intended to cover the fabrication and the installation of tube assemblies and the installation of fittings and fitting assemblies for fluid pressure systems.

6.2 Citation Data. Contract documents should cite this specification by number, title, and date. Drawings should cite this specification by number in a general note.

Notice -- When Government drawings, specifications, or other data are used for any purpose other than in connection with a definitely related Government procurement operation, the United States Government thereby incurs no responsibility nor any obligation whatsoever; and the fact that the Government may have formulated, furnished, or in any way supplied the said drawings, specifications, or other data is not to be regarded by implication or otherwise as in any manner licensing the holder or any other person or corporation, or conveying any rights or permission to manufacture, use, or sell any patented invention that may in any way be related thereto.

Custodian:

NASA-John F. Kennedy Space Center
Kennedy Space Center, Florida 32899

Preparing Activity:

John F. Kennedy Space Center
Mechanical Engineering Division