National Aeronautics and
Space Administration

MSFC-STD-3528
REVISION D
EFFECTIVE DATE: September 8, 2011

George C. Marshall Space Flight Center
Marshall Space Flight Center, Alabama 35812

EV32

MSFC TECHNICAL STANDARD

COMPUTER-AIDED DESIGN (CAD) STANDARD

Approved for Public Release; Distribution Unlimited

DOCUMENT HISTORY LOG

Status (Baseline/ Revision/ Canceled)	Document Revision	Effective Date	Description
Baseline	-	September 30, 2008	Initial release of document.
Revision	A	January 14, 2009	General throughout: Changed “As-Manufactured” to “As-Designed”. Section 3.1: Changed MKS for Meter Kilogram Second to mmKS for millimeter Kilogram Second Section 3.2: Inserted definition of Configuration Item and renumbered accordingly. Updated definition of End Item. Section 4.1.5.1 b: Changed Meter Kilogram Second (MKS) to millimeter Kilogram Second (mmKS). Section 4.1.6.1: Added “inches for English start parts and 0.00127 millimeters for metric start parts” to the end of the first sentence. Section 8.6.8 was: “A WT Part that is to be used outside of its product context is typically an “End Item” and will have a special WT Part object assigned. These end items are normally “Major Assemblies” such as an Aft Skirt or an Instrument Unit.” Section 8.10.1: Inserted Latest Design as a Configuration and updated the definition for Latest, Latest Workgroup Approved, and Latest Released. Section 8.13.2: Updated role names. Replaced Specification Documents with Skeleton Files in 8.13.2.2. Section 8.13.3: Updated all Access by Lifecycle States information. Section 8.14: Updated Workgroup Approval information. Section 8.17: Updated requirements for Viewables. Section 12.10: Updated requirements regarding Named Views and Cross-Section Datums. Designer’s Checklist: Updated C-21, C-22, A-15, and A-16 in accordance with Section 12.10 changes and made them N/A to Checkers. Deleted A-14.
Revision	B	May 19, 2009	Section 2 - Added Authority Documents to the title, made Authority Documents para. 2.1 and renumbered the remaining para.; Added (Draft) after CxP 72142 title. Assigned titles to Desktop Instructions ED-CAD-DI-025 and ED-CAD-DI-026. Section 3.2 - Added definitions for Common Parts and Standard Parts. Section 4.1.3.4 - Replaced "REV-" with "*" in the template file name, with "*" representing the latest revision. Section 4.2.4 - Added reference to ED-CAD-DI-026. Section 5.4.3 - Added -BULK1, -BULK2, etc. as a companion file type. Section 6.5.4.1 - Modified the Description, Part Number and Part Type parameter requirements. Section 6.8.1 - Added exceptions to the requirements for Bulk Items, and a reference to ED-CAD-DI-025. Section 7.2.2 - Added exceptions to 7.2.2.1. Added 7.2.2.3 to define the exceptions. Section 7.3, 8.1.4, 12.1.2.5, 13.6, Appendix B6, Designer's Checklist A-13 - Changed Standard Parts Library to Common Parts Library. Section 7.6.2 - Deleted. Section 8.6.12, 8.12.2, 8.13.1.3 - Deleted. Section 8.9.2 - Added "for assemblies or non-latest revisions of parts" to Item c. Section 12.1.2.1 Para. c. and 12.7.4 - Added " promoting the model to the "Design" state and prior to submitting the model for WGA or" before "release". Section 12.1.2.5 - Added "parts in flat or formed states" to the list for use of family tables. Added Sections 12.7.2.1 and 12.7.2.2 regarding feature and edge references.

			Section 12.13.5 - Added requirements regarding rounds and chamfer children. Changed Appendix B reference to 12.13.6. Appendix B - Corrected paragraph reference for B1, B6, B14. and B16. Deleted ModelCHECK errors and warning list from B2. Deleted B9, B12, and B13. Deleted "lifecycle" two places and the last bullet from B10. Appendix C - Deleted the Optimum Workstation Settings. Appendix D - Added C-25 to check for round and chamfer children. Added reference to ED-CAD-DI-025 to A-7. Appendix E - Assigned titles to Desktop Instructions ED-CAD-DI-025 and ED-CAD-DI-026.
Revision	C	February 08, 2010	Changed the Office of Primary Responsibility from EV83 to EV32. Section 2.1 - Corrected the document number and title. Section 2.3 - Inserted ED-OWI-005 and renumbered; changed the title of Desktop Instruction ED-CAD-DI-014 to Cable Routing; added six new Desktop Instructions at the end of the list. Section 3.2 - Updated the definitions of Effectivity, Hpgl Format, and WT Part. Section 4.1.3.4 - Corrected the template names and clarified the meaning of the "*". Section 4.3.3.1 - Added an exception and the appropriate reference within the document regarding composite views. Section 5.4.3 - Added -PATL as a companion file extension for partial assemblies. Section 5.5 - Added requirements from NASA-STD-(I)-0007 for the file name. Section 6.5.4.2 - Changed "FABRICATION" to "NEXTASSY" and reordered the listing in the tables to match the order the designer fills them out. Section 6.7.2 - Updated the requirements for the OML rep and added requirements for a Graphics rep. Section 6.7.3.1.d – Clarified that fasteners are included in SIMPLE rep. Section 7.2.2 - Added note requirements for Altered Item, Source Control, Vendor Item Control, and Envelope drawings. Section 8.9, 8.10 - Updated the requirements for Managed Baselines. Section 8.10, 8.13, 8.14 - Changed "design data" to CAD and "WT Parts". Section 8.10.1.5 - Added reference to ED-CAD-DI-030. Section 8.13.3.1 - Updated Access to include CAD-WT Part In Work-Read Only. Section 8.15.1.1 - Added reference to ED-OWI-005. Section 12.16.3 - Change DI title to Cable Routing. Section 12.22 - Added additional requirements for Composite Parts. Section 12.23, 13.13 - Added new requirement for Layouts. Section 13.12 - Added new requirements for Large File Management and Partial Assemblies. Section 14.3.8 - Added the exception of adding a new dash number to existing released design data and re-formatted the section to use bullets. Section 14.3.9 - Modified the requirement to reflect that every drawing has an EPL. Section 14.3.11 - Added new section to add requirements for Drawings of Composites. Section 14.4.2 - Added details for drawing notes for other types of drawings added in Section 7.2.2. Section 14.4.5 - Changed "shall" to "should" regarding use of Standard Notes. Section 14.6.2 - Changed the viewable format from hpgl to pdf. Appendix D - Added reference to Paragraph 14.3.8 to C-13. Added C-26 through C-29. Modified D-7 and D-14 to be consistent with new requirements. Added D-17 through D-19. Appendix E - Changed the title of Desktop Instruction ED-CAD-DI-014 to Cable Routing; added two new Desktop Instructions at the end of the list.
Revision	D	9/8/2011	Revision D released; document authorized through MPDMS. Section 1.1.4 – Added "and parts list" after drawing. Section 1.1.9 – Corrected the web address for Pro/ENGINEER Tips and Techniques. Section 2.2 – Deleted CxP 72142 from the list of Required Documents. Section 2.3, Appendix E – Added Desktop Instructions ED-CAD-DI-031, -032, -033, -034, -035, -036.

			Section 3.1 – Deleted CLV, DAC, IE, PIM from the Acronym list. Section 3.2 – Updated definitions of Baseline, Inseparable Assembly, Mono-detail Drawing, and added definitions for Bottom-Up Design Methodology, DDMS Baseline, Design Layout Drawing, Modular Product Architecture, Pro/ENGINEER Layout, and Top-Down Design Methodology. Deleted Hpgl from the list. Section 4.1.5.1 – Changed dashes in Start Part file names to underbars. Section 4.2.4 – Added reference to ED-CAD-DI-026 for acceptable exceptions to ModelCHECK errors. Section 5.1.2.1 Table 2 – Added file extension information to Number field. Section 5.2.2 – Replaced “Part Number” with Dash Number”. Section 5.2.2.7 – Replaced “Part Number” with Dash Number”; replaced MFSC-STD-555 with ED-OWI-005; deleted item d. Section 5.3.1.1 Table 3 – Updated information for Filename and Number. Section 5.3.1.2 – Inserted “base” after “Final”. Section 5.3.1.3 – Replaced final CAD file name requirement with requirement for who assigns the dash number. Section 5.3.1.4 – Added -101, etc., for dash numbers for inseparable assemblies. Section 5.4.1 – Changed “Companion Files...” to “Companion CAD Files...”. Section 5.4.3 – Updated descriptions for ENV, LAY, and REL companion files. Section 5.6 – Updated requirements to change from WGA Promotion Notice to WGA CR; deleted the option of the drawing number for multiple assemblies being in the name. Section 5.7.2 – Added. Section 6.5.4.2 – Changed the drawing parameter name from “NEXTASSY” to “NEXTHIGHER”. Section 6.7.2.1.d – Added “shaded” in front of GRAPHICS in (1) and (2). Section 6.7.3.1.a – Added item (3). Section 6.7.3.1.e – Updated (1) and (2). Section 7.2.2.1 – Added “schematics, etc. to the list of exceptions. Section 7.2.2.5 – Changed “Approved” to “Suggested” in item 4. Section 7.2.2.6 – Added “schematics” after “Envelope”. Section 7.2.2.7 – Added. Section 7.3.5 – Deleted. Section 8.2.3 – Added reference to ED-CAD-DI-033 and ED-CAD-DI-035. Section 8.4.1 – Added reference to ED-CAD-DI-032. Section 8.8.1.3 – Deleted “mono-detail”. Section 8.9, 8.10, Appendix B – Change “Managed Baseline” to “DDMS Baseline”. Section 8.11.4 – Added. Section 8.13.3.6 – Inserted “Rework” state and renumbered “Released” state. Section 8.14.1 – Change “promotion” to “CR”. Section 8.15.1.1 – Added reference to ED-CAD-DI-036. Section 8.17.2 – Deleted references to solid geometry and managed baseline. Section 9 – Changed section from “Top Down Design Methodology” to “Design Methodology”. Section 10 – Changed section from “SPECIFIC GUIDELINES FOR TDD INTEGRAL METHODOLOGY AND CONTROL STRUCTURE” to “BOTTOM-UP DESIGN METHODOLOGY”. Section 11 – Rewrote the requirements regarding Modular Product Architecture and moved old information to ED-CAD-DI-034. Section 12.1.2.1.c – Updated wording to apply to Copy Geometry features Section 12.1.2.1.d – Added. Section 12.4 – Corrected the numbering of the sub-sections. Section 12.7.3 – Added “something logical and meaningful to the designer” as the naming criteria. Section 12.7.4 – Added to delete dependencies prior to release. Section 12.8.2 – Added “or missing details” to the end of the requirement. Section 12.18 – Updated requirements for UDFs. Section 12.22 – Added “or surface” to requirements for boundary curves. Section 12.23 – Added requirements for Pro/ENGINEER layouts.

			Section 12.24 – Added requirements for Envelope Models. Section 13.3.2 – Added requirement regarding Design State and WGA, and to delete prior to release. Section 13.4.1 – Replaced “etc.” with “or any other feature that removes material.” Section 13.14 – Added requirements for Inseparable Assemblies. Section 14.2.2 – Added exception for drawings of 2D geometry and Kit Drawings. Section 14.3.6 – Added “common” between “insert symbols.” Section 14.3.8 Clarified that mono-detail applies to assembly drawings and deleted the last bullet. Added reference to Section 13.14. Section 14.3.13 – Added requirements for Kit Drawings. Section 14.3.14 – Added requirements for Design Layout Drawings. Section 14.3.15 – Added requirements for Envelope/Vendor Item Control/Source Control Drawings. Section 14.4.1 – Added exception for 2D drawings and Kit drawings. Appendix B1 – Changed “increased” to “adjusted” in the first sentence and deleted the last sentence. Appendix B3, B15 – Deleted. Appendix B14 – Changed “hpgl” to pdf”. Appendix D – Updated C-4, C-6, C-15, C-16, C-25, C-26, C-27, C-28, A-1, A-2, A-11, D-2, D-3. Appendix D – Deleted C-20. Appendix D – Added C-30, A-19, W-6. Appendix E – Added six Desktop Instructions to the end of the list.

This page left blank intentionally.

TABLE OF CONTENTS

PARAGRAPH **PAGE**

1. SCOPE/PURPOSE 12
1.1 Application 12

2. AUTHORITY AND APPLICABLE DOCUMENTS 13
2.1 Authority Documents 13
2.2 Required Documents 13
2.3 Reference Documents 13

3. ACRONYMS/DEFINITIONS 14
3.1 Acronyms 14
3.2 Definitions 15

4. GENERAL GUIDELINES 18
4.1 Default Settings 18
4.1.1 Start Part 18
4.1.2 Start Assembly 18
4.1.3 Start Drawing/Drawing Template 19
4.1.4 Dimensional and Angular Tolerances 19
4.1.5 Systems of Units 20
4.1.6 Part Accuracy 20
4.2 Model and Drawing Integrity 21
4.3 General Drafting Requirements 21

5. NAMING CONVENTION 22
5.1 Initial CAD Identification 22
5.1.1 Initial Pro/ENGINEER Design Software CAD Name, Common Name, and Filename 22
5.1.2 Initial DDMS CAD Number, Name, and Filename 23
5.2 Initial CAD File Name 24
5.3 Final CAD Identification for “As-Designed” Model 25
5.3.1 Final DDMS and Pro/ENGINEER Design Software CAD Identification 25
5.4 Companion CAD File Identification 27
5.5 CAD File Name for Vendor Parts 28
5.6 Numbering and Naming of DDMS Baseline and DDMS Change Requests (CRs) for WGA and Other Release 29
5.6.1 DDMS Baseline Numbering and Naming 29
5.6.2 DDMS CR Numbering and Naming for WGA 29
5.6.3 DDMS CR Numbering and Naming for Release 30
5.7 WT Part Identification 31

TABLE OF CONTENTS
(Continued)

PARAGRAPH **PAGE**

6. STANDARD PRACTICES 31
6.1 Layers 31
6.1.1 Layer Usage 31
6.1.2 Default Layers 32
6.2 Colors 33
6.3 Materials 33
6.4 Mass Properties 34
6.5 Parameters 34
6.6 Relations 36
6.7 Simplified Representations 36
6.7.1 Use of Simplified Representations 36
6.7.2 Part Simplified Representations 36
6.7.3 Assembly Simplified Representations 37
6.8 Bulk Items 38

7. STANDARDIZATION 38
7.1 Settings and Scripts 38
7.2 Standard Notes List 38
7.3 Common Parts Library 40
7.4 Symbol Library 40
7.5 Startup Script 40
7.6 Configuration Settings 41

8. PRODUCT LIFECYCLE MANAGEMENT USING DDMS 41
8.1 DDMS 41
8.2 CAD Entry into DDMS 42
8.3 CAD Object and CAD Structure Creation in DDMS 42
8.4 DDMS Product Areas 42
8.5 DDMS CAD Object Versions (Revisions/Iterations) 42
8.5.1 Version Schemes 42
8.5.2 Numeric Version Schemes 43
8.5.3 Alpha-Numeric Version Schemes 43
8.6 DDMS Product Structure 43
8.7 Defining a DDMS Product Structure 44
8.8 WT Part Digital Data Sets 44
8.8.1 Active Model (“As-Designed”) 44
8.8.2 Related Models 45
8.9 DDMS Baselines 45
8.10 Configurations (Options for Gathering Data within DDMS) 46
8.10.1 Description of Configuration for Designers 46

TABLE OF CONTENTS
(Continued)

PARAGRAPH **PAGE**

8.11 Parts List 47
8.12 Lifecycle Scheme 47
8.13 Access Methodology 48
8.13.1 General Requirements 48
8.13.2 Access by Folder 48
8.13.3 Access by Lifecycle State 48
8.14 Workgroup Approval (WGA) 50
8.15 Release 50
8.15.1 Initiation 50
8.15.2 Initial Release 50
8.15.3 Changes to Released Design 50
8.16 Security (SBU) 51
8.17 Viewables 51
8.18 Expedited Release 51

9. DESIGN METHODOLOGY 51
9.1 Guidelines for Selecting Design Methodology 51

10. BOTTOM-UP DESIGN METHODOLOGY 52

11. MODULAR PRODUCT ARCHITECTURE (MPA) 52
11.1 General Requirements 52
11.2 Locator Skeletons 53
11.3 Interface Control Skeletons 53
11.4 Model Requirements 53

12. PART MODELING 54
12.1 Modeling Requirements 54
12.2 Design Intent 55
12.3 Part Initialization 55
12.4 Model Creation 55
12.5 Sketcher 56
12.6 Part/Sketcher Relations 56
12.7 Feature References 56
12.8 Feature Modification/Verification 57
12.9 Part Assembly Datums 57
12.10 Named Views and Cross-Section Datums 57
12.11 Family Tables 57
12.12 Holes 58
12.13 Rounds and Chamfers 58

TABLE OF CONTENTS
(Continued)

PARAGRAPH **PAGE**

12.14 Drafts 58
12.15 Castings and Forgings 59
12.16 Piping/Cabling 59
12.17 Sheet Metal 59
12.18 User Defined Features (UDF) 59
12.19 Gears, Splines and Sprockets 59
12.20 Variable Geometry Components 60
12.21 Pro/PROGRAM™ 60
12.22 Composite Parts 60
12.23 Pro/ENGINEER Layouts 61
12.24 Envelope Models 61

13. ASSEMBLY MODELING 62
13.1 Start Assembly 62
13.2 Skeleton Parts 62
13.3 Assembly Level Dependencies 62
13.4 Assembly Created Features 62
13.5 Component Placement Constraints 63
13.6 Common Parts 63
13.7 Named Views and Cross-Section Datum Planes 63
13.8 Related Level Drawing Model 63
13.9 Shrinkwrap™ Files 64
13.10 Exploded Views 64
13.11 Extraneous Entities 64
13.12 Large File Management 64
13.12.1 Partial Assemblies 64
13.13 Layouts 64
13.14 Inseparable Assemblies 65

14. DRAWING GUIDELINES 65
14.1 Drawing Standards 65
14.2 Drawing Template and Format 65
14.3 Drawing Content and Types of Drawings 66
14.4 Drawing Notes 68
14.5 Tabulated Drawing 69
14.6 Drawing Information from DDMS 69

APPENDIX A Upper Stage Initial Naming Convention 70
APPENDIX B Additional Information For Reference Only 73
APPENDIX C (Deleted) 80
APPENDIX D Designer's Checklist 81
APPENDIX E List of Desktop Instructions 95
APPENDIX F Recommended Hole Sizes 96

LIST OF FIGURES

FIGURE NO. **PAGE**

Figure 1. Pro/ENGINEER Design Software Name Entry Interface 23
Figure 2. DDMS Name Entry Interface 24

LIST OF TABLES

TABLE NO. **PAGE**

Table 1. Pro/ENGINEER Design Software CAD Initial Naming Requirements 22
Table 2. DDMS CAD Initial Numbering/Naming Requirements 23
Table 3. DDMS CAD Final Numbering/Naming Requirements 26
Table 4. DDMS WT Part Identification Requirements 31

1. SCOPE/PURPOSE

This document establishes the requirements and procedures for the creation and modification of Pro/ENGINEER® design software Computer-Aided Design (CAD) models and drawings for use at MSFC. The goal is to produce robust models that relate correct dimensional data directly to manufacturing processes. This document identifies modeling methodology so that all design groups produce consistent electronic deliverables within MSFC. Future revisions of this standard will address other CAD tools used at MSFC.

1.1 Application

1.1.1 All Pro/ENGINEER objects created at MSFC **shall** adhere to the practices described within this document, except Ground Support Equipment (GSE), Special Test Equipment (STE), and other non-flight hardware development entities which typically utilize existing or modified legacy hardware.

1.1.2 GSE, STE, and other non-flight hardware development entities should use this standard as a guide for modeling practices and adhere to it wherever practical.

1.1.3 The solid geometry in the CAD model **shall** be the authority, supplemented by 2-Dimensional (2D) drawings.

1.1.4 The drawing and parts list **shall** be used to define the notes, Geometric Dimensioning and Tolerancing (GD&T), and other information necessary to fully define the configuration.

1.1.5 Full Model Based Definition (MBD) will be addressed in a future appendix or revision to this document. All model annotations and tolerances until full MBD is implemented **shall** be ignored for manufacturing and quality assurance purposes.

1.1.6 This document will be applicable to all subcontractors preparing Pro/ENGINEER models that will be integrated into MSFC designs.

1.1.7 The Designer's Checklist in Appendix D **shall** be used to check design packages for compliance with this Standard.

1.1.8 Models **shall** meet the Designer's Checklist in Appendix D.

1.1.9 Pro/ENGINEER Tips and Techniques which are outside the scope of this document can be found at the following website:
http://iesweb.ndc.nasa.gov/ies/Mechanical/ProE/ProEtipsn.asp.

1.1.10 Information regarding the Design and Data Management System (DDMS) can be found at the following website: https://iec.msfc.nasa.gov/ddms.html. Refer to Desktop Instruction ED-CAD-DI-001, Workspace Use and Troubleshooting, for additional information.

1.1.11 Desktop Instructions (DIs) provide specific information on implementation techniques for certain requirements within the Standard and are listed in Appendix E. These DIs can be found at the Engineering Directorate Operational Instruction website: https://masterlist.msfc.nasa.gov/lvl4_queries_new/iso9000_level4.taf?function=search.

2. AUTHORITY AND APPLICABLE DOCUMENTS

2.1 Authority Documents

a. NASA-STD-(I)-0007 — NASA Computer-Aided Design Interoperability

2.2 Required Documents

a. MSFC-STD-555 Rev. H Para. 4.3.8 — MSFC Engineering Documentation Standard
b. MSFC-STD-2806 — MSFC Tailoring Guide for the Global Drawing Requirements Manual
c. Global Engineering — Drawing Requirements Manual 10th Edition
d. ASME Y14.100 – 2000 — Engineering Drawing Practices
e. ASME Y14.41 – 2003 — Digital Product Definition Data Practices

2.3 Reference Documents

a. ASME Y14.5M – 1994 — Dimensioning and Tolerancing
b. ED-OWI-005 — MSFC Engineering Release
c. IEC DDMS User's Guide Module — Product Structure Creation and Management
d. IEC DDMS User's Guide Module — Baseline Creation and Management
e. IEC DDMS User's Guide Module — Informal Workgroup Approval Process
f. IEC DDMS User's Guide Module — Data Collection and Configuration Specifications
g. Desktop Instruction ED-CAD-DI-001 — Workspace Use and Troubleshooting
h. Desktop Instruction ED-CAD-DI-002 — Naming and Renaming Files in DDMS
i. Desktop Instruction ED-CAD-DI-003 — Library Components
j. Desktop Instruction ED-CAD-DI-004 — Standard Drawing Notes
k. Desktop Instruction ED-CAD-DI-005 — Simplified Representation Creation and Maintenance
l. Desktop Instruction ED-CAD-DI-006 — Creation of Skeleton Files
m. Desktop Instruction ED-CAD-DI-007 — Standard Symbols
n. Desktop Instruction ED-CAD-DI-008 — Updating Drawing Formats
o. Desktop Instruction ED-CAD-DI-009 — MOD File Creation
p. Desktop Instruction ED-CAD-DI-010 — Shrinkwrap Creation
q. Desktop Instruction ED-CAD-DI-011 — Data Transfer
r. Desktop Instruction ED-CAD-DI-012 — Casting and Forging Creation
s. Desktop Instruction ED-CAD-DI-013 — Standard Barrel Panels
t. Desktop Instruction ED-CAD-DI-014 — Cable Routing
u. Desktop Instruction ED-CAD-DI-015 — Piping
v. Desktop Instruction ED-CAD-DI-016 — Related Companion Files

w. Desktop Instruction ED-CAD-DI-017 Creating Standard Layers
x. Desktop Instruction ED-CAD-DI-018 Sheet Metal Parts
y. Desktop Instruction ED-CAD-DI-019 Adding Materials and Generating Mass Properties
z. Desktop Instruction ED-CAD-DI-020 User-Defined Features
aa. Desktop Instruction ED-CAD-DI-021 Gears, Splines, and Sprockets
ab. Desktop Instruction ED-CAD-DI-022 Vendor Item Modeling
ac. Desktop Instruction ED-CAD-DI-023 Exploded Views
ad. Desktop Instruction ED-CAD-DI-024 Tables and Tabulated Drawings
ae. Desktop Instruction ED-CAD-DI-025 Bulk Items
af. Desktop Instruction ED-CAD-DI-026 Verifying 3-Dimensional CAD Models
ag. Desktop Instruction ED-CAD-DI-027 Revising CAD Documents and WT Parts
ah. Desktop Instruction ED-CAD-DI-028 Physical Interface Matrix Creation
ai. Desktop Instruction ED-CAD-DI-029 Modeling of Composites
aj. Desktop Instruction ED-CAD-DI-030 Gathering Released Data in DDMS
ak. Desktop Instruction ED-CAD-DI-031 Ground Strap Creation
al. Desktop Instruction ED-CAD-DI-032 Folder Structure
am. Desktop Instruction ED-CAD-DI-033 Create, Revise, Modify, and Promote
an. Desktop Instruction ED-CAD-DI-034 Modular Product Architecture
ao. Desktop Instruction ED-CAD-DI-035 Computer-Aided Design (CAD) Management Prior to Release
ap. Desktop Instruction ED-CAD-DI-036 Preparation and Processing of a DDMS Change Request for CAD and WT Part Release

3. ACRONYMS/DEFINITIONS

3.1 Acronyms

2D	2-Dimensional
3D	3-Dimensional
BOM	Bill of Materials
CAD	Computer-Aided Design
CDR	Critical Design Review
CM	Configuration Management
DI	Desktop Instruction
DDMS	Design and Data Management System
EPL	Engineering Parts List
GDRM	Global Drawing Requirements Manual
GD&T	Geometric Dimensioning and Tolerancing

GSE	Ground Support Equipment
ICD	Interface Control Document or Interface Control Drawing
IEC	Integrated Engineering Capability
IES	Integrated Engineering System
Lbm	Pounds Mass
MBD	Model Based Definition
mmKS	millimeter Kilogram Second
MPA	Modular Product Architecture
MSFC	Marshall Space Flight Center
OML	Outer Mold Line
PDR	Preliminary Design Review
PLM	Product Lifecycle Management
RMB	Right Mouse Button
STE	Special Test Equipment
TDD	Top-Down Design
UDF	User Defined Feature
US	Upper Stage
WGA	Workgroup Approval

3.2 Definitions

3.2.1	Backward Inheritance	A method of creating -MOD and -MFG files. All features necessary to show all manufacturing or mod states are created in one part. This part is inherited into a new part and features inside the inheritance are erased to show that particular manufacturing state.
3.2.2	Baseline	See DDMS Baseline.
3.2.3	Bill of Material (BOM)	A listing of all parts for an assembly. Also called Engineering Parts List.
3.2.4	Bulk Item	Any item with a quantity of “As Required” on the EPL.
3.2.5	Bottom-Up Design Methodology	Design of individual components independent of external references or controls.
3.2.6	CAD Document	A version controlled object on DDMS that can contain one primary CAD file, as well as other secondary reference files.
3.2.7	CAD File	A file used within the Pro/ENGINEER design software which includes CAD parts, assemblies, drawings, formats,

		sketches, layouts, etc. (.prt, .asm, .drw, etc.)
3.2.8	CAD Model Structure	The relationships between models and where those models are used or referenced.
3.2.9	CAD Object	See CAD Document.
3.2.10	Common Parts	Those items listed on the Common Parts List; can be standard parts and vendor parts.
3.2.11	Configuration Item	An aggregate of hardware, firmware, software, or any of its discrete portions, which satisfies an end-use function and is designated for CM. Configuration Items may vary widely in complexity, size, and type. The following are typically designated as Configuration Items: Top assemblies, main assemblies, components with specifications, spares units, and orbital/logistics replacement units.
3.2.12	DDMS Baseline	A list of a particular collection of models at a certain point in time within DDMS. This does not mean under configuration control. Referred as Managed Baseline within DDMS.
3.2.13	Design Layout Drawing	Type of drawing created to define the overall configuration of a design; serves as an engineering work sheet from which engineering drawings are made; is not used for fabrication, procurement or inspection.
3.2.14	Effectivity	Defines the usage of a specific as-designed configuration for an event or range of events (flight(s), mission(s), test(s), etc.) by use of alpha-numeric values. It is NOT equivalent to as-built serial numbers, lot numbers, or calendar dates. Effectivity for subordinate components of an assembly must be equal to or greater than each applicable assembly effectivity where the component is used.
3.2.15	End Item	A type of WT Part that represents a Configuration Item. Effectivity can be designated against End Item WT Parts in DDMS.
3.2.16	Forward Inheritance	A method of creating -MOD and -MFG files. Enough features are created in a part to show the first manufacturing state. This part is inherited into a new part and new features are created to show the next state. This is continued as many times as necessary to get a finished product.
3.2.17	Inseparable Assembly	An assembly whose piece parts cannot be separated and still retain their original form.
3.2.18	Lateral Dependency	Creating a direct dependency between components in an assembly without using a skeleton.
3.2.19	Lateral Inheritance	Creating an inheritance feature between unrelated parts.
3.2.20	Modular Product Architecture	A type of Top-Down Design Methodology which focuses on the explicit identification and control of the physical/mechanical interfaces and/or their location in the design through the use of skeletons, but does not control the

		overall geometry of the design.
3.2.21	Mono-detail Drawing	Drawing of only one part or assembly.
3.2.22	Part	1) A physical representation of a component or assembly as defined in the EPL or Bill of Material. 2) A Pro/ENGINEER design software model file with a .prt extension
3.2.23	Pro/ENGINEER Layout	Type of file used to create and modify models based on parameters and/or relations. Serves as a vital communication tool that controls all corresponding geometry in one central location, pictorially reflecting what each parameter drives and how.
3.2.24	Promotion Notice	Also called a Promotion Request. Enables the designer to set the state of one or more items to a new lifecycle state with a selection of review processes; allows the designer to promote objects to a WGA state using the WGA process.
3.2.25	Release	Configuration control of a file.
3.2.26	Reps	Short term for simplified representations.
3.2.27	Standard Parts	Those items governed by a national (e.g., National Aerospace Standard) or international (e.g., SAE Aerospace) standard; a non-vendor item part.
3.2.28	Top-Down Design Methodology	Method of placing critical information in a high-level location and communicating that information to the lower levels of the product structure.
3.2.29	WT Part	A version controlled object in DDMS that contains attributes (e.g., number, name, CAGE Code, material, mass) and usage attributes (e.g. quantity, find numbers) for a part item (e.g., detail part, assembly, bulk item, skeleton, schematic) that will be released and/or utilized on the Parts List/Bill of Materials/Product Structure. Item definition data (e.g., CAD models, drawings, parts lists, documents) are related to the WT Part to capture the complete design definition of the item. Relationships (i.e., component, assembly, next higher assembly) are created between WT Parts to create the Product Structure/Indentured Parts List.

4. GENERAL GUIDELINES

4.1 Default Settings

4.1.1 Start Part

4.1.1.1 English and metric start part files **shall** be used in the creation of all parts.

4.1.1.2 If English parts are to be modeled, the English start part file **shall** be used.

4.1.1.3 Use of metric hardware should be avoided where possible.

4.1.1.4 If metric parts are to be modeled, the metric start part file **shall** be used.

4.1.1.5 These start parts are located on a controlled server and maintained by the Integrated Engineering System, (IES). The files are as follows:

a. Msfc-startpart_std - This default start part **shall** be used on all English units designs. This part contains standard views, parameters, relations, datum planes, layers, simplified representations, and a coordinate system.

b. Msfc_startprt_metric - This default start part **shall** be used on all metric designs. This part contains all standard views, parameters, relations, datum planes, and a coordinate system.

4.1.2 Start Assembly

4.1.2.1 English and metric start assembly files **shall** be used in the creation of all assemblies.

4.1.2.2 If English assemblies are to be modeled, the English start assembly file **shall** be used.

4.1.2.3 If metric assemblies are to be modeled, the metric start assembly file **shall** be used.

4.1.2.4 These start assemblies are located on a controlled server and maintained by IES. The files are as follows:

a. Msfc-startassy_std - This default start assembly **shall** be used on all English units. This assembly contains all standard views, parameters, relations, datum planes, and a coordinate system.

b. Msfc_startasy_metric - This is the default start assembly to be used on all metric designs. This assembly contains all standard views, parameters, relations, datum planes, and a coordinate system.

4.1.3 Start Drawing/Drawing Template

4.1.3.1 Drawing templates **shall** be utilized to assist users in quickly beginning a drawing.

4.1.3.2 The start parts, start assemblies, and drawing templates have parameters that **shall** control various fields in the title block.

4.1.3.3 These fields **shall** NOT be overridden by text such that the parameter is no longer controlling them.

4.1.3.4 The following drawing templates **shall** be used:

a. MSFC_DWG_B_TEMPLATE_REV*.DRW

b. MSFC_DWG_C_TEMPLATE_ REV *. DRW

c. MSFC_DWG_D_TEMPLATE_ REV *. DRW

d. MSFC_DWG_E_TEMPLATE_ REV *. DRW

e. MSFC_DWG_J_TEMPLATE_ REV *. DRW

where the "*" will be replaced with the latest revision, such as -, A, B, etc.

4.1.4 Dimensional and Angular Tolerances

4.1.4.1 All MSFC English start parts and assemblies **shall** have the following default tolerance values:

a. Linear X.XX +/- .03

b. Linear X.XXX +/- .010

c. Angular X.X +/- 0.5

These values control the default tolerance for all dimensional values whose tolerance is not otherwise explicitly displayed on the drawing.

4.1.4.2 Limit tolerancing **shall** NOT be used.

4.1.4.3 All tolerances **shall** be equal-bilateral, and all parts **shall** be modeled at the geometric mean of the tolerance band, except for drilled/reamed holes which may be modeled using the Recommended Holes Sizes in Appendix F and use positive unilateral tolerances.

4.1.4.4 If a specific dimension needs to have a tolerance other than the default values in Paragraph 4.1.4.1, the dimension **shall** be displayed using only the equal-bilateral tolerance format and the tolerance values adjusted as needed for that dimension on the face of the drawing.

4.1.4.5 The title block tolerances displayed on the drawing **shall** be driven by the default tolerances defined in the Pro/ENGINEER part and assembly models.

4.1.4.6 The drawing title block **shall** reference the following model parameters:

a. linear_tol_0_00

b. linear_tol_0_000

c. angular_tol_0_0

4.1.4.7 If the default tolerances in Paragraph 4.1.4.1 need to be changed, they **shall** be changed only by updating the tolerance parameters in the part or assembly model. This change would then be reflected in the drawing title block.

4.1.4.8 The drawing title block fields for default tolerances **shall** NOT be manually overridden.

4.1.5 Systems of Units

4.1.5.1 The units of the start parts/assemblies are as follows:

a. Inch Lbm Second for Msfc_startpart_std and Msfc_startassy_std. This is the Pro/ENGINEER default.

b. Millimeter Kilogram Second (mmKS) for Msfc_startprt_metric and Msfc_startasy_metric.

4.1.6 Part Accuracy

4.1.6.1 MSFC default start parts **shall** use an absolute accuracy of 0.0005 inches for English start parts and 0.0127 millimeters for metric start parts. The default value may be increased if geometry errors are produced with this value. After changing the accuracy, the model must be regenerated.

4.1.6.2 Relative accuracy **shall** NOT be used.

4.1.6.3 See Appendix B for additional information.

4.2 Model and Drawing Integrity

4.2.1 ModelCHECK™ is an integrated application that runs transparently within Pro/ENGINEER. ModelCHECK uses a configurable list of design standards and best modeling practices. It can be configured to run interactively as well as automatically when the designer regenerates or saves a model.

4.2.2 All designers **shall** run ModelCHECK interactively at the following points, at a minimum:

a. Prior to submittal for Workgroup Approval (WGA)

b. Prior to submittal for Preliminary Design Review (PDR) and Critical Design Review (CDR)

c. Prior to submittal for Configuration Management (CM) Release

4.2.3 All designers should run ModelCHECK interactively at the following points, at a minimum:

a. At regular intervals throughout the design activity

b. After creating Primary, Secondary, and Tertiary features for parts. Refer to Section 12 for additional information

c. At initial check in for external or vendor parts

4.2.4 Errors found by ModelCHECK **shall** be resolved prior to check in to DDMS when changing state to design, for creation of a baseline, for WGA, at release, and other times as required at a minimum. Refer to Desktop Instruction ED-CAD-DI-026, Verifying 3-Dimensional CAD Models, for acceptable occurrences of modeling techniques that ModelCHECK lists as an error.

Warnings **shall** be evaluated and resolved where possible. Refer to Desktop Instruction ED-CAD-DI-026, Verifying 3-Dimensional CAD Models, for information on running ModelCHECK and resolving resulting errors and warnings.

4.2.5 See Appendix B for additional information.

4.3 General Drafting Requirements

4.3.1 Drawings **shall** be prepared in accordance MSFC-STD-2806 and the Global Drawing Requirements Manual (GDRM) 10th Edition. The GDRM contains requirements from ASME Y14.100 and its subtier documents.

4.3.2 The EPLs **shall** be generated within DDMS and be separate from the drawing for MSFC released drawings. (Refer to Paragraph 8.11)

4.3.3 When preparing a drawing utilizing Pro/ENGINEER design software, the following requirements apply:

4.3.3.1 All views and dimensions **shall** be derived from the model, except as allowed in Paragraph 14.3.11.

4.3.3.2 Sketching in of model geometry and overriding of dimensions **shall** NOT be allowed.

4.3.3.3 Notes on drawings **shall** come from the Standard Notes List (Refer to Paragraph 7.2) when an appropriate note is available. Other notes not covered in the standard notes list may be added to the drawing as required.

4.3.4 Detailed Drawing Guidelines are given in Section 14.

5. NAMING CONVENTION

5.1 Initial CAD Identification

5.1.1 Initial Pro/ENGINEER Design Software CAD Name, Common Name, and Filename

5.1.1.1 The naming requirements in Table 1 **shall** be used when creating a Pro/ENGINEER object prior to official MSFC numbers being assigned. Figure 1 shows the Pro/ENGINEER interface where the identification is entered. If MSFC numbers have already been assigned, the MSFC numbers may be used in accordance with Paragraph 5.3.1.

TABLE 1. Pro/ENGINEER CAD Initial Naming Requirements

Pro/ENGINEER Field Name	3D CAD Model or 2D CAD Drawing
Name (Filename) (User entered)	Utilize Project CAD Naming Convention described in Section 5 of this standard. NOTE: A file extension .prt, .asm, or .drw is automatically added to the Name field value to create the filename based on the type of file selected.
Common Name (User entered)	Assign name using all CAPS in a format specified by the drawing title requirements of GDRM Sec 8.0 Procedures or ASME Y 14.100 Section 5.0/Appendix C. (See Para. 6.5.3)
Filename (System generated)	Software completes the filename from the Pro/ENGINEER Name field by adding the file extension .prt, .asm, or .drw

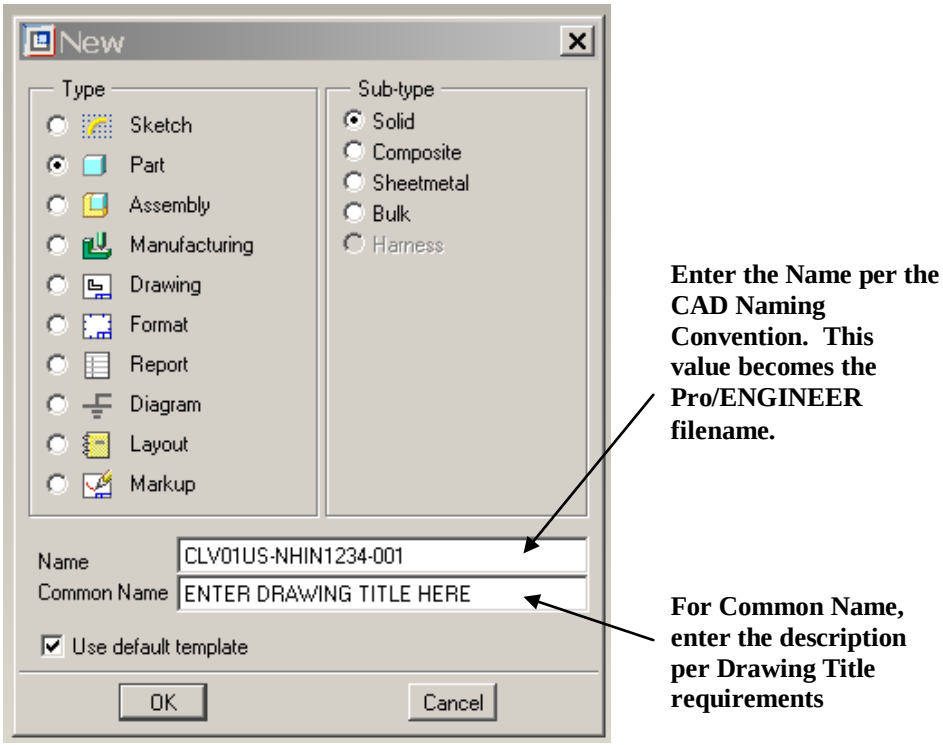

Figure 1. Pro/ENGINEER Design Software Name Entry Interface

5.1.2 Initial DDMS CAD Number, Name, and Filename

5.1.2.1 The naming requirements in Table 2 **shall** be used when creating a DDMS CAD Document prior to official MSFC numbers being assigned. Figure 2 shows how the Pro/ENGINEER naming maps to the DDMS CAD model fields. If MSFC numbers have already been assigned, the MSFC numbers may be used in accordance with Paragraph 5.3.1.

TABLE 2. DDMS CAD Initial Numbering/Naming Requirements

DDMS Field Name	3D CAD Model or 2D CAD Drawing
Number	Utilize Project CAD Numbering Convention described in Section 5 of this standard. (NOTE: When Pro/ENGINEER is uploaded to DDMS, this value is automatically mapped from the Pro/ENGINEER Name (Filename) field including the file extension .prt, .asm, of drw.)
Name	Assign name using all CAPS in a format specified by the GDRM Sec 8.0 Procedures or ASME Y 14.100 Section 5.0/Appendix C (NOTE: When Pro/ENGINEER is uploaded to DDMS, this field value is automatically mapped from the Pro/ENGINEER Common Name field)
Filename	Utilize Project CAD Numbering Convention described in Section 5. (NOTE: When Pro/ENGINEER is saved to DDMS workspace, this field value displays the Pro/ENGINEER Name (Filename) field with file extension .prt, .asm, of drw)

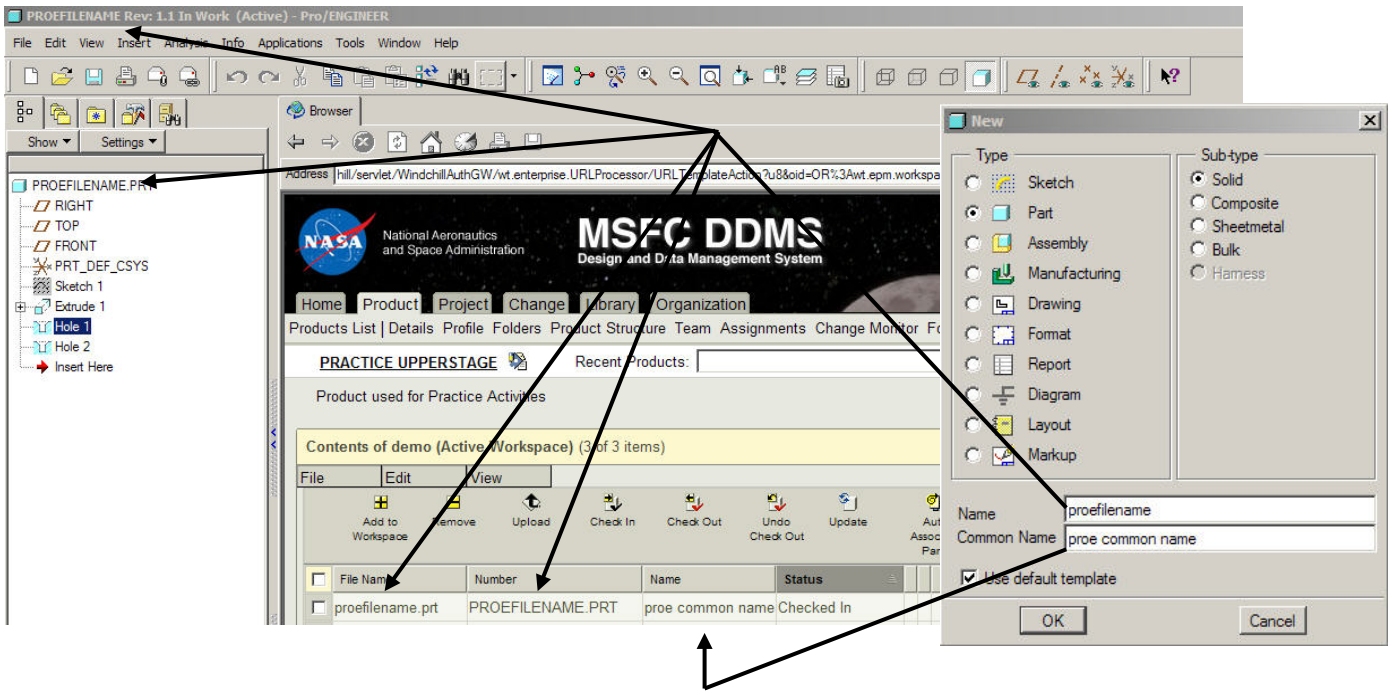

Figure 2. DDMS Name Entry Interface

5.2 Initial CAD File Name

5.2.1 If MSFC numbers have already been assigned, the MSFC numbers may be used in accordance with Paragraph 5.3.1. Otherwise, the initial CAD file name **shall** be set up to make the file name more intuitive of its content, location, and function, while keeping the number of characters the same for all files for the first 20 characters. This is useful during trades and exporting files into other software packages early in the design cycle. Because 32 characters are the most that are allowed within Pro/ENGINEER, limiting the name to 20 initially provides flexibility to add extensions as needed during trades.

5.2.2 The initial CAD file name **shall** have seven or eight distinct parts which define the Project Code, Concept ID, Element, Location, Subsystem/Component Function, Sequence Number, Dash Number, and Companion File Type (when applicable):

5.2.2.1 Project Code

a. 3 alpha characters assigned by CM.

5.2.2.2 Concept ID

a. 2 numeric characters
b. All files should be named 01 initially
c. 02, 03, etc., can be used for trades

5.2.2.3 Element

a. 2 alpha characters defined within each project
b. Represents major divisions of a project

5.2.2.4 Location

a. Dash (-) followed by 2 alpha characters defined within each project
b. Represents the physical location of the hardware
c. NH for Next Higher Level is used when the location is not confined to a single place

5.2.2.5 Subsystem/Component Function

a. 2 alpha characters determined by the project
b. Represents the subsystem or function of the hardware
c. IN for integration is used when there is not a single subsystem or function involved, such as an assembly of the avionics and pyrotechnics within the Interstage

5.2.2.6 Sequence Number

a. 4 numeric characters determined by the designer with the following restrictions:
   (1) Part and assembly files must have different model numbers in case the file extension is dropped
   (2) 9000 series will be used to specify the file type other than part, assembly, and drawing files
   For example: 9021 could be the sequence number for a skeleton file
   (3) 0000 should be used for the top assembly file within a subsystem and vehicle location
b. Each group **shall** have control over its set of numbers
c. A log **shall** be created for management of numbers within each subsystem.

5.2.2.7 Dash Number

a. Dash (-) followed by 3 numeric characters
b. Dash numbers will follow the convention defined in Organizational Work Instruction ED-OWI-005, MSFC Engineering Release, Section C.2 regarding odd dash numbers, even dash numbers, etc.
c. Most dash numbers will be -001

5.2.2.8 Companion File Type (when applicable)

a. "As-Designed" does not use a type extension
b. Refer to Paragraph 5.4 for additional information

5.2.2.9 See Appendix A for an example of project specific initial CAD file naming details and examples.

5.3 <u>Final CAD Identification for "As-Designed" Model</u>

5.3.1 <u>Final DDMS and Pro/ENGINEER Design Software CAD Identification</u>

5.3.1.1 The numbering and naming convention in Table 3 **shall** be assigned to DDMS Objects prior to release. It is recommended that this naming convention is utilized as soon as official MSFC numbers have been assigned:

TABLE 3. DDMS CAD Final Numbering/Naming Requirements

DDMS Field Name	3D CAD Model	2D CAD Drawing
Filename	Part number plus file extension assigned by CAD package (e.g., .prt or .asm for Pro/ENGINEER files)	a. The shown part number for drawings with a shown and opposite configuration; or b. The base drawing number with no dash number for other drawings with multiple dash numbers on the same drawing per C.2.3; or c. The same as the part number for all other drawings.
Number	Same as Filename.	Same as Filename.
Name	Assign name from Drawing Title requirements in the GDRM Sec 8.0 Procedures or ASME Y 14.100 Section 5.0/Appendix C. (See Para. 6.5.3)	Assign name from Drawing Title requirements in the GDRM Sec 8.0 Procedures or ASME Y 14.100 Section 5.0/Appendix C

5.3.1.2 Final base drawing numbers **shall** be obtained from the MSFC Release Desk.

5.3.1.3 The dash number **shall** be assigned by the project or design organization.

5.3.1.4 Dash Numbers for part and assembly files **shall** be -001, -003, etc., or -002, -004, etc. for opposites, or -101, -103, etc. for parts/assemblies defined in an inseparable assembly and not detailed on their own drawing.

5.3.1.5 Drawing numbers **shall** NOT be re-used. If a drawing number is assigned and a change deletes that part, then that drawing number is discarded and not ever used.

5.3.1.6 Files **shall** be renamed from the initial CAD file name to the final CAD file name as follows, whichever comes first:

a. Rename files when ready for formal approval cycle

(1) This keeps the file name meaningful to those not working that subsystem

(2) This would help keep from wasting drawing numbers

(3) This would be most applicable to assembly files and associated drawings that would be released later than part files

b. Rename files when ready for design review deliverable

(1) This allows the manufacturing organization to track the files and get their system in place using the number for which they will ultimately deliver hardware

(2) This would be most applicable to parts, especially long lead items

(3) The drawing number assignment spreadsheet **shall** be available so that those not working that subsystem would know who owned any given file at least down to the subsystem level

5.3.1.7 Parts and related objects **shall** only be renamed in DDMS. DDMS tracks all file relationships, and objects renamed outside of DDMS will lose all references to objects within DDMS. Refer to Desktop Instruction ED-CAD-DI-002, Naming and Renaming Files in DDMS, for additional information. See Appendix B for additional information on how to sort by part number within DDMS.

5.4 Companion CAD File Identification

5.4.1 Companion CAD Files are CAD models created in order to manage CAD data (i.e. Shrinkwrap™ files, skeletons, envelopes, related assemblies, etc.) or provide additional part information (modified models, manufacturing models, Stress and Analysis models, etc.). These companion models **shall** have the same part number as the active model plus a type extension.

5.4.2 File extensions **shall** be used to differentiate between the "As-Designed" CAD model which uses the base part number and other types of companion CAD models. (Refer to Paragraph 8.8.2.3 for additional information on companion models.)

5.4.3 The following extensions **shall** be added after the dash number for the part or assembly when applicable:

EXTENSION	DESCRIPTION
-ALT1, -ALT2, etc.	Model created to provide an alternate representation of the active CAD model such as simplified substitutes
-DEP1, -DEP2, etc.	Deployed models
-DYN1, -DYN2, etc.	Dynamics models
-ENV1, -ENV2, etc.	1) Envelope part models, accurately representing the Outer Mold Line (OML) of the part/assembly as a single part 2) Envelope models for Envelope, Source Control Drawings, Vendor Item Control Drawings
-FLAT1, -FLAT2, etc.	Flat state of sheet metal parts or flat pattern for cables

EXTENSION	DESCRIPTION
-GEN1, -GEN2, etc.	Generic of family table part instance. The generic should be associated to all WT Parts whose master defining model is a family table instance.
-HRN1, -HRN2, etc.	Harness subassembly models
-ICD1, -ICD2, etc.	Interface Control Document (ICD) skeleton models
-BULK1, BULK2, etc.	Any modeled bulk items, such as Spray on Pipe Insulation and Propellant (See Section 6.8)
-LAY1, -LAY2, etc.	Design Layout drawing models (not Pro/ENGINEER Layouts)
-MASS1, -MASS2, etc.	Mass properties models
-MVA1, -MVA2, etc.	Model View Assembly facilitates copying geometry from simplified reps
-MFG1, -MFG2, etc.	Models created to support manufacturing (typically captures intermediate manufacturing states of the part).
-MOD1, -MOD2, etc.	Modified representation of the part design such as an “As-Installed” model.
-NOTE1, -NOTE2, etc.	Notebooks
-PATL1, -PATL2, etc.	Partial assemblies used in large file management
-PIPE1, -PIPE2, etc.	Pipe subassembly models
-PKG1, -PKG2, etc.	Package subassembly models
-REL1, -REL2, etc.	Related model assembly used for creation of drawings for large assemblies, used for installation/integration/design layout drawings.
-SIM1, -SIM2, etc.	Model created to support an analysis or simulation
-SKL1, -SKL2, etc.	Skeleton models (not ICDs)
-SWR1, -SWR2, etc.	Shrinkwrap models
-TRD1, -TRD2, etc.	Trade Study models

5.5 CAD File Name for Vendor Parts

5.5.1 The CAD file name for vendor parts **shall** match the vendor part number. The vendor filename **shall** NOT exceed 25 characters and **shall** be followed by an underbar (_) and the MSFC 2-character identifier of MS; for example NAS1351N3-6_MS. Refer to NASA-STD-(I)-0007, NASA Computer-Aided Design Interoperability, for additional information.

5.5.2 When vendor part numbers include characters that are not allowed, such as a slash (/), an underbar (_) **shall** be substituted for such characters.

5.5.3 The relation PART_NUMBER=REL_MODEL_NAME must be deleted for vendor parts. The exact part number **shall** then be entered using the Part_Number parameter without the _MS identifier.

5.6 Numbering and Naming of DDMS Baseline and DDMS Change Requests (CRs) for WGA and Other Release

5.6.1 DDMS Baseline Numbering and Naming

5.6.1.1 DDMS Baseline Number

DDMS Baselines are either auto-numbered by the DDMS system, or the DDMS Baseline number should be assigned in accordance with the DDMS Baseline Name requirements in Paragraph 5.6.1.2 such that the baseline Number and Name field match.

5.6.1.2 DDMS Baseline Name

DDMS Baselines should be named using the following convention:

(1)_(2)_(3)_(4)

The values for each item are defined below.

(1) Milestone/Reason for Baseline (e.g., DAC, PDR Start, PDR End, PDR Subsystem Start, PDR Subsystem End, WGA, CR Number)

(2) Highest Assembly Part Number (e.g., 97MXXXXX-001), or CR Title

(3) Name/Abbreviation of Assembly or Drawing including where used (e.g., Project Element Subsystem Part/Drawing - ARES US Common Bulkhead Y-Ring Forging)

(4) User defined (Optional)

Example 1: PDR Subsystem Start_97MXXXXX-001_ARES US Common Bulkhead
Example 2: PDR System Start_97MXXXXX-001_ARES US Common Bulkhead
Example 3: WGA PDR System Start_97MXXXXX-001_ARES US Common Bulkhead
Example 4: CR CLV-US-0026_97M12345-001_ARES US Common Bulkhead Y-Ring Forging

5.6.2 DDMS CR Numbering and Naming for WGA

The type of CR for WGA **shall** be IEC WGA Change Request.

5.6.2.1 CR Number for WGA

Each CR number **shall** be a unique number.

5.6.2.2 WGA CR Naming

WGA CRs should be named using the following convention. This convention is identical to the Baseline Naming Convention for a WGA.

(1)_(2)_(3)_(4)

The values for each item are defined below.

(1) "WGA" plus Milestone/Reason for WGA

(2) Highest Assembly Part Number (e.g., 97MXXXXX-001)

(3) Name/Abbreviation of Assembly or Drawing including where used (e.g., Project Element Subsystem Part/Drawing - ARES US Common Bulkhead Y-Ring Forging)

(4) User defined (Optional)

Example 1: WGA PDR System Start_97MXXXXX-001_ARES US Common Bulkhead
Example 2: WGA_97MXXXXX-001_ARES US Common Bulkhead_2008-05-30

5.6.3 DDMS CR Numbering and Naming for Release

The type of CR for release **shall** be IEC Change Request.

5.6.3.1 CR Number for Release

a. Each CR number **shall** be a unique number.

b. CR numbers **shall** be assigned either by the originating organization from the organization's CR log, or assigned by the receiving Project from the Project's CR log.

(1) MSFC organizations **shall** assign CR numbers in the following format:

Org Code-XXXX, where XXXX equals a sequential number starting with 0001

(2) Projects may assign CR numbers per the numbering system established in the Project's CM Plan.

5.6.3.2 CR Name (or Title)

CRs should be named using the following convention. This convention is identical to the Baseline Naming Convention for a CR.

(1)_(2)_(3)_(4)

The values for each item are defined below.

(1) “CR” plus the CR number

(2) Highest Assembly Part Number in the CR Promotion Notice (e.g., 97MXXXXX-001)

(3) Name/Abbreviation of Assembly or Drawing including where used (e.g., Project Element Subsystem Part/Drawing - ARES US Common Bulkhead Y-Ring Forging), or Description of the reason for the CR (e.g., Initial Release)

(4) User defined (Optional)

Example 1: CR CLV-US-0026_97MXXXXX-001_ARES US Common Bulkhead Y-Ring Forging
Example 2: CR CLV-US-0026_97MXXXXX-001_ARES US Common Bulkhead Y-Ring Forging Initial Release

5.7 WT Part Identification

5.7.1 Prior to release, WT Parts **shall** be identified in accordance with Table 4.

TABLE 4. DDMS WT Part Identification Requirements

DDMS Field Name	WT Part
Number	Part number (9XMXXXXX-XXX)
Name	Assign name using the Drawing Title requirements in the GDRM Sec 8.0 procedures or ASME Y 14.100 Section 5.0/Appendix C

5.7.2 The designer **shall** delete the extension (.prt, .asm, .drw, etc.) from the WT Part Number to meet the above requirement.

6. STANDARD PRACTICES

6.1 Layers

6.1.1 Layer Usage

6.1.1.1 All non-solid items **shall** be placed on a layer.

6.1.1.2 Items **shall** reside on one layer only.

6.1.1.3 Visibility of items **shall** NOT be controlled by UNHIDE or HIDE in the model tree at check in. Layers are used to control visibility of items, while UNHIDE or HIDE is for temporary use only.

6.1.1.4 Layers of a drawing **shall** have their status saved such that the appearance of the drawing is retained.

6.1.1.5 All drawings **shall** be controlled by layers at the drawing level, not at the model level.

6.1.1.6 All non-solid layers **shall** be set to hidden when checked into DDMS except for drawings.

6.1.1.7 See Appendix B for additional information.

6.1.2 Default Layers

6.1.2.1 All MSFC start files **shall** have default layers set up with rules or as controlled by the config.pro and the default layer model.

6.1.2.2 The following **shall** be utilized as the default layers within all MSFC CAD part models and assemblies and **shall** NOT be renamed:

01_PLANES	(Created Planes)
01_DEF_PLANES	(Default Planes)
02_CSYS	(Created CSYS)
02_DEF_CSYS	(Default CSYS)
03_AXES	(All Axes)
04_POINTS	(All Points)
05_CURVES	(All Curves)
06_GTOLS	(Geometric Tolerances)
07_SURFACES	(All Surfaces)
08_EXT_GEOM	(Any Copy or External Geometry)
09_COSMETICS	(All Cosmetic Features except Threads)
10_COSMETIC_THREADS	(Cosmetic Threads Only)
11_IMPORTED_GEOM	(Imported Geometry and Neutral Files)
12_PIPELINES	(All Piping features)
13_MODEL_NOTES	(Model Notes, Hole Callouts, other Annotations)

The following **shall** be utilized as the default layers within all MSFC drawings and **shall** NOT be renamed:

01_DRW_DRAFT_GTOL_DTMS (All Drawing Geometric Tolerance Draft Datums)

6.1.2.3 Models or drawings without standard layer assignments **shall** have the above layers assigned using the standard MSFC scripts. Refer to ED-CAD-DI-017, Creating Standard Layers, for additional information on setting up layers within models and drawings.

6.1.2.4 Addition of layers should be kept to a minimum.

6.1.2.5 Additional layers shall have a prefix of 99_ followed by a user-defined description. (Example: 99_CONSTRUCT_DTMS)

6.2 Colors

6.2.1 Colors can be used to give a part or assembly model a certain look or texture that may be desirable to the designer. All MSFC models **shall** have default colors controlled by the config.pro, which points to the appearance.dmt file.
6.2.2 The following colors **shall** be used for the following types of routed lines as defined in the standard color table:

6.2.2.1 Hydrogen lines **shall** be RED.

6.2.2.2 Oxygen lines **shall** be GREEN.

6.2.2.3 Helium lines **shall** be YELLOW.

6.2.2.4 Nitrogen lines **shall** be BLUE.

6.2.2.5 Power cabling **shall** be GRAY.

6.2.2.6 Data cabling **shall** be BROWN.

6.2.2.7 Pyrotechnic lines **shall** be PURPLE.

6.2.3 Colors **shall** NOT be assigned at the assembly level for the above items.

6.2.4 Black or white **shall** NOT be used for any model.

6.3 Materials

6.3.1 Every homogeneous solid body **shall** have material assigned from the standard materials list. The standard materials list includes the appropriate density.

6.3.2 The selected material is automatically populated into the appropriate field in DDMS. A standard materials library **shall** be maintained by IES.

6.3.3 Non-homogeneous or purchased items **shall** NOT have materials assigned.

6.3.4 Refer to Desktop Instruction ED-CAD-DI-019, Adding Materials and Generating Mass Properties.

6.4 Mass Properties

6.4.1 Every part **shall** have Mass Properties.

6.4.2 When a component solid body is modeled with sufficient detail, mass properties **shall** be calculated by Pro/ENGINEER and updated prior to WGA or other approval cycle and at intermediate points at the designer's discretion.

6.4.3 Otherwise, mass properties **shall** be manually entered using the alternate mass properties parameters.

6.4.4 The parameter Mass **shall** contain the correct value for the calculated mass of the part or the manually entered value for the part.

6.4.5 Refer to Desktop Instruction ED-CAD-DI-019, Adding Materials and Generating Mass Properties.

6.5 Parameters

6.5.1 All user defined parameters controlling solid geometry **shall** have units assigned.

6.5.2 Dimensionless units (number of places, etc.) **shall** NOT have units assigned.

6.5.3 The Drawing Title **shall** match the Common Name field in DDMS and Pro/ENGINEER.

6.5.4 The designer **shall** correctly populate or verify the accuracy of the following standard parameters.

6.5.4.1 Part/Assembly Parameters

Parameter Name	Designer Responsibility
DESCRIPTION	Controlled through a relation. Designer **shall** verify the information matches the Common Name/ Drawing Title
FRACTURE_CRITICAL	Defaulted to no. Designer **shall** verify no is correct or change to yes.
MATERIAL	Controlled through a relation. Designer **shall** verify the information is correct. (Part Parameter only)
METRIC UNITS	Defaulted to no. Designer **shall** verify no is selected.
PART_NUMBER	Controlled through a relation. Designer **shall** verify the information matches the file name with part number extension. (Example: 97M25000-**001**) For vendor parts, the designer may delete the relation and manually enter the part number when the part number contains special characters. See Section 5.5.

PART_TYPE	Designer may enter one of the following numbers or verify the number in the field is correct: 1 = assemblies, 2 = detail parts, 3 = vendor components (valves, source control items, etc.), 4 = standard parts (fasteners, fittings, connectors, etc.) (optional field)
ENGINEER	Designer **shall** enter the name of the responsible engineer. (FIRST NAME LAST NAME)
TRACE_CODE	Designer **shall** assign number per MPR 8040.2.
CAGE_CODE	Controlled through DDMS. Designer **shall** verify information is correct.
DENSITY	Controlled through a relation. Designer **shall** verify the information is correct. (Part Parameter only)
MASS	Controlled through a relation. Designer **shall** verify the information is correct. (i.e., regenerate, etc.)
PTC_MATERIAL_NAME	Controlled through a relation. Designer **shall** verify the information is correct.

6.5.4.2 Drawing Parameters

Parameter Name	Designer Responsibility
DESIGN_ORG.	Designer **shall** enter his design organization (i.e., EV32)
DRAWN_BY	Designer **shall** enter his name. (FIRST NAME LAST NAME)
TITLE1	Up to first 20 characters of Name per Paragraph 5.3
TITLE2	Up to second 20 characters of Name per Paragraph 5.3
TITLE3	Up to third 20 characters of Name per Paragraph 5.3

The following drawing parameters are for configuration control purposes and **shall** NOT be changed:

Parameter Name	General Information
REVRELEASEDATE	Added by CM
CHECKER	Added by CM
MATERIALS	Added by CM
STRESS	Added by CM
SMA	Added by CM
MANUFAC	Added by CM
CONTRACTOR	Added by CM
NEXTHIGHER	Added by CM
DESIGNBRANCH	Added by CM
RELEASEDATE	Added by CM

6.5.5 See Appendix B for additional information.

6.6 Relations

6.6.1 Relations are user-defined equations written between dimensions and parameters. Relations let the designer control relationships between features and/or parts.

6.6.2 All constant values used in relations **shall** have appropriate units assigned.

6.6.3 Sketcher relations **shall** NOT create references external to the sketch.

6.6.4 Relations **shall** be created at the part level unless limited by Pro/ENGINEER design software.

6.6.5 Assembly level relations **shall** NOT be used to control geometry and features of parts.

6.6.6 Refer to Paragraph 12.6 for additional information on Part/Sketcher relations.

6.7 Simplified Representations

6.7.1 Use of Simplified Representations

Simplified representations (commonly called reps) **shall** be used to improve the regeneration, retrieval, and display times of assemblies to allow the designer to work more efficiently. Refer to Desktop Instruction ED-CAD-DI-005, Simplified Representation Creation, for additional information.

6.7.2 Part Simplified Representations

6.7.2.1 The following simplified reps **shall** be used and maintained for each Pro/ENGINEER part:

a. **MASTER**
   (1) The MASTER rep **shall** be the deliverable end item for all piece-parts.
   (2) The MASTER rep **shall** represent the model of the part "As-Designed" (not "As-Installed").
   (3) The MASTER rep **shall** remain the default rep.

b. **SIMPLE**
   (1) The SIMPLE rep **shall** remove unnecessary features and represent a basic envelope of the part.
   (2) The SIMPLE rep **shall** be created from the MASTER rep.
   (3) The SIMPLE rep **shall** then be redefined as necessary to exclude features such as rounds, small holes, large patterns, pockets, fasteners, etc. Features that should

not be excluded on this rep are features such as major penetrations thru the vehicle skin for vents, feed lines, umbilicals, plumbing, etc.

c. **OML**

(1) The OML rep **shall** represent those components that are visible from outside the vehicle.

(2) The OML rep **shall** be created from the SIMPLE rep.

d. **GRAPHICS**

(1) A shaded GRAPHICS rep **shall** be created automatically upon saving.

(2) The shaded GRAPHICS **shall** be controlled by the config.pro.

6.7.3 Assembly Simplified Representations

6.7.3.1 The following simplified reps are required for all assemblies/sub-assemblies and **shall** be used and maintained for each Pro/ENGINEER assembly/subassembly:

a. **MAIN**

(1) The MAIN rep **shall** be the rep that coincides with the EPL.

(2) The MAIN rep **shall** exclude items such as skeletons and reference geometry.

(3) The default rep **shall** be the geometry rep for parts and the MAIN rep for assemblies.

b. **EMPTY**

(1) The EMPTY rep **shall** be completely empty. The EMPTY rep is set to exclude all components.

c. **MAIN_NO_FASTENERS**

(1) The MAIN_NO_FASTENERS rep **shall** be an exact copy of the MAIN rep with the exception that no fasteners are displayed.

(2) The MAIN_NO_FASTENERS rep **shall** exclude all fasteners.

d. **SIMPLE**

(1) The SIMPLE rep **shall** include all components in the MAIN rep, including fasteners, with the exception that the SIMPLE rep **shall** have all components with their MASTER reps substituted to SIMPLE reps.

e. **OML**

(1) The OML rep **shall** have all components to OML rep.

(2) Fasteners may be included as required.

(3) The OML rep **shall** exclude internal components.

6.8 Bulk Items

6.8.1 Bulk items **shall** only exist as a WT Part within DDMS and **shall** NOT have geometry associated to it, except as noted below. Bulk items are defined as any item with a quantity of "As Required" on the EPL. If a bulk item does not exist in DDMS, refer to Desktop Instruction ED-CAD-DI-003, Library Components, for additional information.

NOTE: Insulation and solid propellant are the only exceptions to this requirement when either needs to be modeled for mass properties, clearances, and design considerations for attaching hardware. Refer to Desktop Instruction ED-CAD-DI-025, Bulk Items, for additional information on modeling these exceptions.

7. STANDARDIZATION

7.1 Setting and Scripts

7.1.1 The following standard settings and supporting data are required to obtain consistent operation of Pro/ENGINEER design software and to perform CAD modeling activities in accordance with this standard. These settings and supporting data **shall** be fully documented and maintained by IES.

7.1.2 Appropriate client software installation scripts **shall** be maintained that are capable of setting up a standard seat of Pro/ENGINEER design software.

7.1.3 These installation scripts **shall** install and/or configure these standard settings and supporting data for both a client machine located inside the MSFC computer network and for a client machine located outside of the MSFC computer network.

7.2 Standard Notes List

7.2.1 A set of standard notes for use on MSFC drawings **shall** be located on a controlled server and maintained by IES.

7.2.2 A standard toolkit **shall** exist that will automate the addition of Common Notes to the drawing.

7.2.2.1 For part drawings (not Altered Item, Envelope, Source Control, or Vendor Item Control drawings, schematics, etc.), the toolkit will place the following notes as the required first notes (Common Notes) on the drawing:

1. GD&T and 14.41 note
2. Burrs and edge break
3. Material
4. Surface Finish
5. Surface treatment/final protective finish

6. Part marking
7. Cleaning
8. Material traceability

7.2.2.2 For assembly drawings, the toolkit will place the following notes as the required first notes (Common Notes) on the drawing:

1. GD&T and 14.41 note
2. Part marking
3. Cleaning

7.2.2.3 For Altered Item drawings, the toolkit will place the following notes as the required first notes (Common Notes) on the drawing:

1. GD&T and 14.41 note
2. Burrs and edge break
3. Make From note
4. Surface Finish
5. Surface treatment/final protective finish
6. Obliterate vendor part number/re-identify with new number
7. Cleaning

7.2.2.4 For Source Control drawings, the toolkit will place the following notes as the required first notes (Common Notes) on the drawing:

1. GD&T and 14.41 note
2. No substitution note
3. No guarantee of future availability from the vendor note
4. Approved source(s) note
5. Part marking

7.2.2.5 For Vendor Item Control drawings, the toolkit will place the following notes as the required first notes (Common Notes) on the drawing:

1. GD&T and 14.41 note
2. No substitution note
3. No guarantee of future availability from the vendor note
4. Suggested source(s) note
5. Part marking

7.2.2.6 For Envelope, schematics, and other types of drawings, the designer will select the applicable notes.

7.2.2.7 When Envelope drawings are planned to become Source Control Drawings or Vendor Item Control drawings, the designer **shall** use the Common Notes for Source Control Drawings or Vendor Item Control drawing, respectively.

7.2.3 When any of the Common Notes do not apply, the designer shall select Not Applicable instead of deleting that note and replacing it with another. Refer to Desktop Instruction ED-CAD-DI-004, Standard Drawing Notes, for additional information, including changes to the Standard Notes List.

7.3 Common Parts Library

7.3.1 A Common Parts Library **shall** be maintained to aid designers in the selection of parts common for the entire vehicle to the greatest extent possible. While not every item a designer needs will be found in the library, this should be the first place a designer looks when selecting parts. The Common Parts Library is comprised of parts that have been commonly used in the past, are known to be flight qualified for certain space flight applications, and are recommended for use in the future. Non-flight library parts are also available for GSE and STE.

7.3.2 The designer **shall** verify the parts are appropriate for a specific application. The availability of parts in the Common Parts Library does not mean a library part can be used for all applications.

7.3.3 Additions/deletions and/or revisions to the Common Parts Library can be made by the designers following the process outlined in the Desktop Instruction ED-CAD-DI-003, Library Components.

7.3.4 See Appendix B for additional information.

7.3.5 Deleted.

7.4 Symbol Library

7.4.1 A standard symbol library located on a controlled server **shall** be created and maintained by IES.

7.4.2 Standard symbols **shall** be documented in Desktop Instruction ED-CAD-DI-007, Standard Symbols.

7.4.3 See Appendix B for additional information.

7.5 Startup Script

7.5.1 A start up script **shall** be created which automatically copies all MSFC standard configuration files to the user and ensures the latest MSFC approved version of Pro/ENGINEER design software is being utilized.

7.5.2 Pro/ENGINEER design software **shall** always be started using the start up script.

7.6 Configuration Settings

7.6.1 MSFC **shall** create and maintain several standard configuration files that define the setup of Pro/ENGINEER and the way it operates. These files are located on a controlled server and maintained by IES. The following is a list of these files:

7.6.1.1 Config.pro - The config.pro file is a text file that stores all of the settings that define the way in which Pro/ENGINEER handles operations.

7.6.1.2 Config.sup - Config.sup is a protected system configuration file. Any values that are set in this file cannot be overridden by other (more local) config.pro or config.win file.

7.6.1.3 Config.win - The config.win file is a database file that stores window configuration settings, such as toolbar visibility settings and Model Tree location settings.

7.6.1.4 Drawing Setup (.dtl) File - This file controls the Pro/ENGINEER drafting application. This setup file options determine such characteristics as the height of dimension and note text, text orientation, geometric tolerance standards, font properties, drafting standards, and arrow lengths.

7.6.1.5 Protk.dat file - The protk.dat file adds a menu to the Pro/ENGINEER design software application for running special toolkit applications written specifically for MSFC.

7.6.2 Deleted.

8. PRODUCT LIFECYCLE MANAGEMENT USING DDMS

8.1 DDMS

8.1.1 The MSFC DDMS is a web-enabled Product Lifecycle Management (PLM) tool that provides an infrastructure for management, access, and control of engineering and project data, including documents, CRs, CAD models, CAD drawings, WT Parts, CAD structure, product structure, parts lists, processes, and records.

8.1.2 DDMS **shall** provide a secure, electronic environment to manage and control CAD and WT Part data, including

- Application of automatic version control and retention of previous versions
- Locking of objects in specified approval states
- Managing the relationship between data objects and processes

8.1.3 DDMS **shall** maintain the controls and relationships between objects and processes as long as the data objects reside within DDMS.

8.1.4 DDMS **shall** provide an electronic Library capability to house standard objects which are utilized across multiple products and assemblies, such as Common Parts and drawing formats.

8.2 CAD Entry into DDMS

8.2.1 DDMS **shall** be used as the PLM tool for product definition.

8.2.2 DDMS **shall** contain all CAD models defining the design.

8.2.3 Creation and maintenance of these files in DDMS **shall** be the responsibility of engineering. Refer to Desktop Instruction ED-CAD-DI-033, Create, Revise, Modify and Promote, and ED-CAD-DI-035, Computer-Aided Design (CAD) Management Prior to Release, for additional information.

8.3 CAD Document and CAD Structure Creation in DDMS

8.3.1 DDMS **shall** automatically create a DDMS CAD Document for each CAD model saved in DDMS.

8.3.2 DDMS **shall** transfer the identity of the CAD model as a part, assembly, or drawing to the DDMS CAD Document.

8.3.3 DDMS **shall** transfer model parameters to the DDMS CAD Document, including number and name fields as specified in Paragraph 5.1.2.

8.3.4 DDMS **shall** replicate the CAD model structure from Pro/ENGINEER and apply those relationships to the CAD Documents in DDMS.

8.4 DDMS Product Areas

8.4.1 CAD document location **shall** be set upon check in to the appropriate DDMS Product folder according to the team assignment and product definition and scope. Refer to Paragraph 8.13.2 and Desktop Instruction ED-CAD-DI-032, Folder Structure, for additional information.

8.5 DDMS CAD Object Versions (Revisions/Iterations)

8.5.1 Version Schemes

8.5.1.1 DDMS object versions are in the format “revision.iteration”. DDMS **shall** contain two version schemes, a numeric version scheme (e.g., 1.1, 1.2; 2.1, 2.2), and an alpha-numeric version scheme (e.g., -.1, -.2; A.1, A.2).

8.5.1.2 The numeric version scheme **shall** be applied to objects that are in a development or pre-release status.

8.5.1.3 The alpha-numeric version scheme **shall** be applied to objects that are being revised prior to submittal for release. The alpha-numeric version scheme applies to all revisions after release.

8.5.2 Numeric Version Scheme

8.5.2.1 DDMS **shall** identify the initial version of each CAD object checked in to DDMS as version 1.l, with each update to that revision adding a new iteration (e.g., 1.1, 1.2, 1.3).

8.5.2.2 When CAD objects are revised, the version **shall** change to 2.1, with each revision adding a new numeric revision (e.g., 2.1, 3.1, 4.1).

8.5.3 Alpha-Numeric Version Scheme

8.5.3.1 When CAD data is ready to be submitted for release, the designer **shall** revise the CAD data to revision dash (-.1) utilizing the instructions in Desktop Instruction ED-CAD-DI-027, Revising CAD Documents and WT Parts.

8.5.3.2 DDMS **shall** reflect a new iteration with each update to that revision (e.g., -.1, -.2, -.3).

8.5.3.3 CAD data **shall** be initially released at revision dash (-).

8.5.3.4 When released CAD objects are revised, the version **shall** change to A.1, with each revision adding a new alpha revision (e.g., A.1, B.1, C.1).

8.6 DDMS Product Structure

8.6.1 The Product Structure within DDMS **shall** match the assembly structure as defined on the top assembly drawing tree or other approved document.

8.6.2 A product structure **shall** be created using WT Parts within DDMS.

8.6.3 Each WT Part **shall** be created on DDMS to represent all parts on the EPL. A “part” may refer to any detail part, assembly, or sub-assembly.

8.6.4 A WT Part **shall** have a part number as defined in Paragraph 5.7.

8.6.5 A WT Part **shall** only have one “active” CAD Document for the part.

8.6.6 This “active” CAD Document **shall** be considered the “master” definition of the part.

8.6.7 Additional CAD documents can be “passively” associated to the WT Part as needed.

8.6.8 A WT Part that is to be linked to other WT Parts outside of its product is typically an "End Item" and will have a special WT Part object assigned.

8.6.9 The product structure for a WT Part **shall** include all related WT Parts needed to capture a complete design definition and will represent the engineering Bill of Materials (BOM) or EPL.

8.6.10 The product structure **shall** capture the definition of the following items:

a. Part Number
b. Part Description
c. Part Quantity
d. Alternate or Substitute Parts
e. Reference Designations
f. Find Number for its associated drawing for assemblies

8.6.11 For more details refer to the Integrated Engineering Capability (IEC) DDMS User's Guide Module on Product Structure Creation and Management.

8.6.12 Deleted.

8.7 Defining a DDMS Product Structure

8.7.1 Refer to the IEC DDMS User's Guide Module on Product Structure Creation and Management.

8.8 WT Part Digital Data Sets

8.8.1 Active Model ("As-Designed")

8.8.1.1 The active model of a WT Part **shall** represent the model of the part in its "As-Designed" condition when opened using the CAD File's MASTER rep for parts and MAIN rep for assemblies. Refer to Paragraphs 6.7 and 12.1 for additional information.

8.8.1.2 WT Parts designed by MSFC **shall** include a 3-Dimensional (3D) model representing the "As-Designed" condition of the part design.

8.8.1.3 WT Parts designed by MSFC **shall** include a drawing containing all information necessary for fabrication, finish, marking and inspection except where required by business practices or by Pro/ENGINEER limitations as a minimum.

8.8.1.4 Each Find Number shown on a drawing **shall** have its own WT Part object.

8.8.1.5 Digital data sets associated to each WT Part **shall** include all required dependencies to other CAD Documents as needed to fully capture and maintain the WT Part's design definition. Other Documents can be associated to a WT Part object on DDMS to fully define the design definition of the WT Part.

8.8.2 Related Models

8.8.2.1 CAD Documents that do not define the active model definition of a WT Part but which are required to fully define or maintain the design definition of the same WT Part **shall** be passively associated to each WT Part. An example of a CAD Document would be an ICD skeleton file. Refer to Paragraph 8.6 for additional information.

8.8.2.2 Models representing earlier designed conditions which are not defined by a WT Part may utilize a forward inheritance, backward inheritance or family table method as appropriate.

8.8.2.3 Companion Files **shall** be passively associated to the WT Part object for the active model by the same part number. Refer to Paragraph 5.4 for list of companion files.

8.8.2.4 Drawing Files **shall** be passively associated to a WT Part object and may be used to document one or more parts.

8.8.2.5 The following types of drawings (per 7.8.7 of GDRM) **shall** be passively associated to their referenced WT Part object, but **shall** NOT have their own WT Part:

a. Schematics
b. Wiring Diagrams
c. Logic Diagrams
d. Elevation Drawings
e. Connection Drawings
f. Printed Wiring Master Pattern

8.9 DDMS Baselines

8.9.1 Any End Item from a product should have a DDMS baseline produced immediately after the End Item has been promoted to the Workgroup Approved lifecycle state. The creator of this baseline is responsible for gathering and capturing ALL dependencies based upon the model structure using the Engineering Development Configuration. Refer to Paragraph 8.10.1.1.

8.9.2 DDMS Baselines for CAD design work **may** be captured by the designer at the following points. The creator of this baseline is responsible for gathering and capturing REQUIRED dependencies based upon the model structure.

a. End of design cycle
b. Export of data outside DDMS
c. Prior to WGA for assemblies or non-latest revisions of parts

d. Prior to Review (PDR, CDR, etc.)
e. Prior to Release
f. "As-Designed" baseline
g. Other designated times

8.9.3 Refer to the IEC DDMS User's Guide Module on Baseline Creation and Management for instructions on this method of creating a baseline.

8.9.4 See Appendix B for additional information.

8.10 Configurations (Options for Gathering Data within DDMS)

8.10.1 Description of Configuration for Designers:

8.10.1.1 Latest

a. **Shall** be used to collect the latest version of CAD and WT Parts for which the user has access.
b. Will only collect Design or higher lifecycle states for products to which the user is only a member.
c. Is the default configuration specification and **shall** be used for most current engineering activities.

8.10.1.2 DDMS Baseline

a. May be used to collect the precise versions of CAD and WT Parts as listed in the specified DDMS Baseline.
b. User must specify a baseline previously created to use this method.
c. The specific version of the initial object selected must be in the baseline.

8.10.1.3 Latest Design

a. May be used to collect the latest version of CAD and WT Parts which are in the Design lifecycle state.

8.10.1.4 Latest Workgroup Approved

a. May be used to collect the latest version of CAD and WT Parts which are in the Workgroup Approved lifecycle state.

8.10.1.5 Latest Released

a. May be used to collect the latest version of CAD and WT Parts which are in the Released lifecycle state. Refer to Desktop Instruction ED-CAD-DI-030, Gathering Released Data in

DDMS, for additional information on how to gather data for previously released versions as well as the latest released.

8.10.1.6 Released by Effectivity

a. **Shall** be used to collect the precise version of CAD and WT Parts effective for an End Item.
b. This collection rule **shall** be used for gathering data for the following cases:
   (1) Manufacturing, Flight Readiness Reviews.
   (2) Creation of effective "As-Designed" Baseline.

8.10.2 Refer to the IEC DDMS User's Guide Module on Data Collection and Configuration Specifications for additional information on Data Gathering.

8.10.3 Refer to Desktop Instruction ED-CAD-DI-011, Data Transfer, for additional information.

8.10.4 See Appendix B for additional information.

8.11 Parts List

8.11.1 The parts list **shall** be generated as a report within DDMS.

8.11.2 Find numbers **shall** match the appropriate callouts on the drawing at WGA, other project specified points at which a baseline is created, and at release.

8.11.3 Find numbers in the parts list **shall** NOT be re-ordered or re-assigned after the drawing and its associated parts list are formally released and under CM, including those that are assigned using a repeat region in a table.

8.11.4 Advanced Parts Lists **shall** consist of WT Parts without any CAD documents associated to them.

8.12 Lifecycle scheme

8.12.1 Lifecycle states are associated to all objects in DDMS (documents, CAD documents, WT Parts).

8.12.2 Deleted.

8.13 Access Methodology

8.13.1 General Requirements

8.13.1.1 Data access within DDMS Products **shall** be controlled by Product Team Roles, Lifecycle States and Folders.

8.13.1.2 Additionally, object based access control for CAD Documents and WT Parts **shall** be implemented using the Sensitive But Unclassified (SBU) restrictions described in Paragraph 8.16.

8.13.1.3 Deleted.

8.13.2 Access by Folder

8.13.2.1 Product Folder

a. **Shall** contain the latest CAD and WT Parts for the product under development.
b. Only members with product roles of “Access: Design” or “Access: Control” **shall** modify data in this folder.

8.13.2.2 Control Folder

a. **Shall** contain controlling CAD and WT Parts such as Interface Control Files and Skeleton Files.
b. Only members with a product role of “Access: Control” **shall** modify data in this folder.

8.13.2.3 Trades Folder

a. **Shall** contain alternate or out of date CAD and WT Parts and data not yet intended for general product development team consideration.
b. Only members with product roles of “Access: Design” or “Access: Control” **shall** modify data in this folder.

8.13.3 Access by Lifecycle State

8.13.3.1 In Work

a. CAD and WT Parts in the “In Work” lifecycle state **shall** be visible and modifiable by members with Product roles of “Access: Design” or “Access: Control” based upon folder access in Para. 8.13.2.

b. CAD and WT Parts in the “In Work” lifecycle state **shall** be visible to personnel in the “CAD-WT Part In Work-Read Only” Product team role.

c. CAD and WT Parts in the "In Work" lifecycle state **shall** NOT be visible to personnel in any other Product team roles.

8.13.3.2 Design

a. CAD and WT Parts **shall** be visible and revisable by members with Product roles of "Access: Design" or "Access: Control".

b. CAD and WT Parts **shall** be visible but not modifiable to all confirmed members of the DDMS Product.

8.13.3.3 Pending Approval

a. CAD and WT Parts **shall** be visible and revisable by members with Product roles of "Access: Design" or "Access: Control", but not modifiable.

b. CAD and WT Parts **shall** be visible but not modifiable to all confirmed members of the DDMS Product.

8.13.3.4 Workgroup Approved

a. CAD and WT Parts **shall** be visible and revisable by members with Product roles of "Access: Design" or "Access: Control", but not modifiable.

b. CAD and WT Parts **shall** be visible but not modifiable to all confirmed members of the DDMS Product.

8.13.3.5 Under Review

a. CAD and WT Parts **shall** be visible and revisable by members with Product roles of "Access: Design" or "Access: Control", but not modifiable.

b. CAD and WT Parts **shall** be visible but not modifiable to all confirmed members of the DDMS Product.

8.13.3.6 Rework

a. CAD and WT Parts **shall** be visible and modifiable by members with Product roles of "Access: Design" or "Access: Control" based upon folder access in Para. 8.13.2.

b. CAD and WT Parts **shall** be visible but not modifiable to all confirmed members of the DDMS Product.

8.13.3.7 Released

a. CAD and WT Parts **shall** be visible and revisable by members with Product roles of "Access: Design" or "Access: Control".

b. CAD and WT Parts **shall** be visible but not modifiable to all confirmed members of the DDMS Product.

8.14 Workgroup Approval (WGA)

8.14.1 The WGA CR process may be used to perform a pre-release review of CAD and WT Parts. Refer to the IEC DDMS User's Guide Module on the Workgroup Approval Process.

8.15 Release

8.15.1 Initiation

8.15.1.1 Design release (both initial release and change release) **shall** be initiated by a DDMS CR. Refer to Organizational Work Instruction ED-OWI-005, MSFC Engineering Release, and ED-CAD-DI-036, Preparation and Processing of a DDMS Change Request for CAD and WT Part Release, for additional information.

8.15.2 Initial Release

8.15.2.1 Design packages for initial release **shall** include the following items for each part being released:

a. WT Part

b. "As-Designed" CAD model object which is actively associated to the WT Part

c. CAD drawing object which is passively associated to the WT Part

d. Other CAD documents necessary for complete product definition of the WT Part, including all companion files, which are passively associated to the WT Part.

8.15.3 Changes to Released Design

8.15.2.1 Changes to released design **shall** be documented in revisions to the released objects.

8.15.2.2 The revised objects **shall** be submitted for release by a DDMS CR.

8.15.2.3 The DDMS CR for design change release **shall** include detailed change descriptions for each object included in the change package.

8.16 Security (SBU)

8.16.1 SBU restrictions **shall** prevent access for certain user groups even though they otherwise meet the access requirements for Paragraph 8.13.

8.16.2 Designers/Engineers **shall** NOT use personal and/or home directories to store SBU files created for any project or program.

8.17 Viewables

8.17.1 DDMS **shall** create viewables of all solid geometry and drawings in the "As-Stored" configuration upon check-in.

8.17.2 The designer **shall** ensure that viewables of all drawings are created prior to the WGA process and release process.

8.17.3 See Appendix B for additional information.

8.18 Expedited Release

Details on the Expedited Release process will be provided in a future revision.

9. DESIGN METHODOLOGY

Design activities can be accomplished using Bottom-Up Design Methodology, Top-Down Design Methodology or a combination of the two.

9.1 Guidelines for Selecting Design Methodology

9.1.1 When all parts are to be independent during the entire design cycle, Bottom-Up Design Methodology should be used. Refer to Section 10 for detailed information.

9.1.2 When wanting to control geometry and/or location of multiple parts parametrically using skeletons during the development of the design, Top-Down Design Methodology should be used.

9.1.2.1 The type of Top-Down Design Methodology used **shall** be Modular Product Architecture methodology. Refer to Section 11 for detailed information.

9.1.2.2 All external references **shall** be broken prior to release.

10. BOTTOM-UP DESIGN METHODOLOGY

10.1 External references shall NOT exist in the models, except for Pro/PIPING and Pro/CABLING which may make external references to skeleton models located within the respective cabling or piping assembly ONLY.

10.1.1 External references may be used to provide a temporary guide during feature creation, but **shall** then be removed from the model immediately. (See Section 13.4.2)

10.2 Skeleton files and Pro/ENGINEER Design layouts **shall** NOT be used to drive geometry.

10.2.1 Locator skeleton files and Pro/ENGINEER Design layouts may be used to drive location and/or orientation. See Section 11.2 for details.

10.3 During creation of an assembly, constraining the parts with actual mating features is recommended. Coordinate systems and datum features may be used for constraining components.

10.4 Inheritance features are allowed as defined in Sections 8.8.2.2, 12.1.2, and 12.15.

10.6 Part family tables are allowed. Part family tables **shall** NOT be broken into single stand-alone parts.

11. MODULAR PRODUCT ARCHITECTURE (MPA)

The MPA process involves the explicit identification and management of interfaces using skeletons.

11.1 <u>General Requirements</u>

11.1.1 The MPA process may be used as a tool to coordinate location and interface definition during design development but all external references **shall** be broken prior to release.

11.1.2 Features using external references **shall** be re-routed to use internal references prior to deleting the external references.

> ***Note**: To allow easy breaking of external references, child features should be kept to a minimum and created in such a way to enable easy re-routing.*

11.2 Locator Skeletons

11.2.1 Locator skeletons are used for location and orientation of interfaces. They **shall** NOT be used to drive parts or other skeletons, including routing, unless the components have multiple interfaces.

11.2.2 Publish geometry sets within locator skeletons should contain coordinate systems only.

11.2.3 Locator skeletons **shall** contain the minimum features necessary to define locator coordinate systems.

11.2.4 Locator skeletons **shall** NOT contain external references.

11.2.5 Locator skeletons **shall** NOT contain solid geometry.

11.3 Interface Control Skeletons

11.3.1 Interface control skeletons are stand alone files.

11.3.2 Interface control skeletons **shall** only control geometry and NOT location.

11.3.3 Because external references will be broken prior to release, it is acceptable for one interface control skeleton to drive multiple components.

11.3.4 Interface control skeletons **shall** NOT contain solid geometry.

11.4 Model Requirements

11.4.1 Models **shall** contain external references that are only dependent upon ~~from~~ publish geometry features from locator or interface control skeletons.

11.4.1.1 Additional external references may be used to provide a temporary guide during feature creation, but **shall** then be removed from the model immediately. (See Section 13.4.2)

11.4.2 Parameters and relations **shall** be controlled at the part level and NOT by other parts, assemblies or layouts.

11.4.3 Because external references will be broken prior to release, it is acceptable for one skeleton to be used for multiple routed lines.

11.4.4 Reference viewer or ModelCHECK **shall** be run prior to release to verify all external references have been deleted.

11.4.5 Refer to the following Desktop Instructions for details on implementing MPA:

- ED-CAD-DI-034 Modular Product Architecture
- ED-CAD-DI-028 Physical Interface Matrix Creation
- ED-CAD-DI-006 Creation of Skeleton Files

12. PART MODELING

12.1 Modeling Requirements

12.1.1 All geometry **shall** be created at full scale.

12.1.2 For the creation of the "As-Designed" model and any part model used in the MAIN rep of assemblies, the following applies:

12.1.2.1 The model **shall** contain the complete feature history.

a. Features as modeled should remain in the model tree.

b. Files **shall** NOT be exported to a neutral format and then imported to clean up features or dependencies. This does not apply to vendor items.

c. Copy Geometry features are acceptable within the model providing they are set to "Independent" prior to promoting the model to the "Design" state or WGA and deleted prior to submitting the model for release.

d. Inheritance features are acceptable within the model providing they are set to "Independent" prior to promoting the model to the "Design" state, WGA and release.

12.1.2.2 All additional part conditions needed for design definition **shall** be captured in companion files and not within simplified representations.

12.1.2.3 Opposite models **shall** be created as a dependent mirror model and **shall** define a master model and a related WT Part.

12.1.2.4 An inheritance between different WT Parts **shall** only be used for a "Make from" condition. An example of this use is applicable for castings to the final machined part.

12.1.2.5 Family table parts **shall** be used only with tabulated drawings, parts with flat and formed states, within Common parts libraries, or as definition of companion files within a data set.

12.1.2.6 Small features such as the standard edge breaks, small inside corner radii, small machined radii, etc., **shall** NOT be added to the model. These **shall** be captured with a general note on the drawing. Examples: Top edge of o-ring grooves, inside corner radii.

12.2 Design Intent

12.2.1 Models **shall** be created such that if a feature is modified, all related features update accordingly.

12.2.2 Models **shall** have no frozen features.

12.2.3 Models **shall** have no suppressed features unless required by family tables.

12.2.4 All extraneous entities should be deleted. An extraneous entity would be any entity that is not needed in the definition of the model geometry.

12.3 Part Initialization

12.3.1 Before beginning a part model, the designer should look for a similar part to copy, mirror, or save from, when applicable.

12.3.2 The existing model **shall** first be evaluated for proper construction before it is copied, mirrored or saved from.

12.4 Model Creation

12.4.1 In order to maintain good downstream usage, the part **shall** be created at the designer's discretion in the following manner:

12.4.1.1 Primary Feature Level

a. Primary level features comprise the functional features of the part. These features include alignment, range of motion, and housing features.
b. Examples: Major bores, datum features, interface surfaces, skeletons, etc.

12.4.1.2 Secondary Feature Level

a. Secondary level features are comprised of features that allow the part to be assembled to other parts, provide clearance with other parts, and reduce the weight of the part.
b. Examples: Holes, lightening cutouts, clearance cuts, etc.

12.4.1.3 Tertiary Feature Level

a. Tertiary features are comprised of finishing features, such as rounds, fillets, chamfers,

drafts and similar details not required for function.

12.5 Sketcher

12.5.1 The designer **shall** select the feature type and attributes that best define design intent and intelligence of a feature.

12.5.2 Sketch entities should be created inside, rather than outside the existing part boundaries when cutting away material.

12.5.3 The designer **shall** verify that the sketch is "Fully Constrained".

12.5.4 All sketcher dimensions **shall** be locked after the sketch is completed.

12.6 Part/Sketcher Relations

12.6.1 Relations may be used when necessary in part models to help facilitate proper design intent. When relations are used, comments **shall** be added to describe the expression.

12.6.2 All errors **shall** be removed from the relations field.

12.6.3 Refer to Paragraph 6.6 for further information.

12.7 Feature References

12.7.1 The design intent of the model **shall** drive the designer's choice of feature references.

12.7.2 When selecting feature references, the designer should select the foundation features when possible.

12.7.2.1 The order in which the designer should select feature references is datums, surfaces, or edges.

12.7.2.2 Edge references should be avoided if possible, by selecting datums or surfaces.

12.7.3 Features other than the default datums that are frequently referenced should be named something logical and meaningful to the designer so that they might be found using the search tool.

12.7.4 All external dependencies within the model **shall** be up-to-date and toggled to "Independent" prior to promoting the model to the "Design" state and prior to submitting the model for WGA and deleted prior to release.

12.8 Feature Modification/Verification

12.8.1 If a part is modified, it **shall** be verified at the next assembly level to ensure that no failures have occurred.

12.8.2 Drawing and companion files **shall** be verified to update without failures or missing details.

12.9 Part Assembly Datums

12.9.1 The designer **shall** add datum features, such as planes, axes, and coordinate systems, to aid in placement at the assembly level.

12.9.2 The designer **shall** name these features accordingly so that they will not accidentally be deleted.

12.10 Named Views and Cross-Section Datums

12.10.1 Separate datum planes should be created for named and cross-section views used on the detail drawing.

12.10.2 If Datum Planes are created for named views, they **shall** be renamed to **"view_*viewname*"**. For example, View A would be renamed "view_A".

12.10.3 If Datum Planes are created for cross-section views, they **shall** be renamed to **"sec_sectionname".** For example, Section A-A would be renamed "sec_A".

12.10.4 Datum planes **shall** NOT be frozen or suppressed due to missing placement references.

12.11 Family Tables

12.11.1 Family table columns **shall** be renamed to clearly represent the information contained in the tabulated table.

12.11.2 Family tables **shall** be verified before they are checked into DDMS.

12.11.3 Family table fields **shall** NOT be populated with an asterisk. The actual value must be inserted.

12.11.4 Family tables **shall** NOT be nested.

12.12 Holes

12.12.1 Threaded hole thread depth and tap drill depth **shall** be modeled to the mean of the tolerance zone as shown on the drawing.

12.12.2 External and internal threads **shall** be modeled as follows:

12.12.2.1 Internal Thread: Hole is nominal tap drill size

12.12.2.2 External Thread: Shaft diameter is nominal major diameter

12.12.3 Detail screw threads **shall** NOT be modeled as helixes but **shall** instead be defined by the applicable specification, unless the thread form must be shown in order to fully specify thread definition or when required for feature orientation. The threads should be modeled as a hole with a flag note callout on the drawing to specify the thread details.

12.12.4 Drilled/reamed holes may be modeled using the Recommended Holes Sizes in Appendix F and use positive unilateral tolerances.

12.12.5 Drilled holes should be created using the hole command.

12.13 Rounds and Chamfers

12.13.1 The designer should place rounds and chamfers at the Tertiary Feature level.

12.13.2 The designer **shall** NOT include different dimensional values in the same feature except for variable rounds.

12.13.3 Rounds and chamfers should be created using “Intent edges” first, then by the “Multi” selection tool.

12.13.4 Rounds and chamfers should be created using the rounds and chamfers command.

12.13.5 Rounds and chamfers **shall** NOT have children. Exceptions to this requirement are given in Desktop Instruction ED-CAD-DI-026, Verifying 3-Dimensional CAD Models.

12.13.6 See Appendix B for additional information.

12.14 Drafts

12.14.1 The designer should place drafts at the Tertiary Feature level. If a draft cannot be applied using the draft functionality, it can be added to the sketch as necessary.

12.14.2 Draft should be created using “Intent surfaces” first, then by the “Multi” selection tool.

12.15 Castings and Forgings

12.15.1 The designer should create casting and forgings models using the “Inheritance” functionality of Pro/ENGINEER design software.

12.15.2 Refer to Desktop Instruction ED-CAD-DI-012, Casting and Forging Creation, for additional information.

12.16 Piping/Cabling

12.16.1 These modules have pre-defined cables/fittings and pipe stock. The designer **shall** insert these files from the standard library.

12.16.2 If a standard part does not exist in DDMS, refer to Desktop Instruction ED-CAD-DI-003, Library Components, for additional information.

12.16.3 Refer to Desktop Instructions ED-CAD-DI-014, Cable Routing, and ED-CAD-DI-015, Piping, for additional information.

12.17 Sheet Metal

12.17.1 Flat Patterns **shall** be created to support drawing creation and for use by manufacturing.

12.17.2 A family table instance **shall** be created of the flat pattern and named in accordance with Section 5.

12.17.3 Refer to Desktop Instruction ED-CAD-DI-018, Sheet Metal Parts, for additional information.

12.18 User Defined Features (UDF)

12.18.1 A UDF **shall** be inserted from the standard UDF library within DDMS if available.

12.18.2 A UDF **shall** be un-grouped after insertion to break the link with the .GPH file.

12.18.3 If a UDF does not exist in the standard UDF library and may be useful to others, refer to Desktop Instruction ED-CAD-DI-020, User Defined Features, for additional information.

12.19 Gears, Splines and Sprockets

12.19.1 All gear, spline, or sprocket models **shall** be created to fully define the part.

12.19.2 The SIMPLE part rep will suppress the display of gear, spline, and sprocket tooth features to simplify viewing at upper level assemblies.

12.19.3 Refer to Desktop Instruction ED-CAD-DI-021, Gears, Splines, and Sprockets, for additional information.

12.20 Variable Geometry Components

12.20.1 A variable geometry component is one that can be used in more than one configuration or shape. The designer **shall** create a -MOD part that is placed into the assembly at the "As-Installed" or fabricated condition.

12.20.2 The designer **shall** verify that all variations of the component are identical except for shape. Examples: Electrical components with a pigtail; ground straps; seals; and hose assemblies.

12.21 Pro/PROGRAM™

12.21.1 Pro/PROGRAM™ may be used at the designer's discretion to help resolve part and assembly issues.

12.22 Composite Parts

12.22.1 Composite Parts **shall** be modeled as a solid.

12.22.2 Each ply boundary **shall** be defined by a curve or surface projected onto its layup surface.

12.22.3 Each ply boundary curve or surface **shall** be named as follows: PLYxxxx, where xxxx represents a four digit number. The ply boundary curves should be numbered by tens initially (PLY0010, PLY0020, PLY0030, etc.) to allow for new plies to be inserted later and the ply boundary curves still be in numerical order.

12.22.4 Each ply boundary curve or surface **shall** be placed on a separate user-defined layer, with the name corresponding to the ply name and the layer hidden when checked into DDMS. For example, PLY0010 will be on layer 99_PLY0010. When ply boundaries are exactly the same, they may be placed on a single layer with the layer named 99_PLY(first layer)-(last layer), where (first layer) and (last layer) correspond to the appropriate four digit numbers.

12.22.5 The tooling surface definition **shall** be extended a minimum of six inches beyond the edges of the part, placed on a user-defined layer named 99_TOOLING_SURFACE, and the layer hidden when checked into DDMS.

12.22.6 Refer to Desktop Instruction, ED-CAD-DI-029, Modeling of Composites, for additional information on modeling techniques for composites.

12.23 Pro/ENGINEER Layouts

12.23.1 Pro/ENGINEER layouts may be used during design development or to support trade studies. If used, Pro/ENGINEER layouts **shall** be undeclared prior to release, but should remain declared until the design is frozen or complete.

12.24 Envelope Models

This section is applicable to models of vendor items that will be procured through Envelope, Source Control, and Vendor Item Control drawings. This section is not applicable to vendor items in the standard library or –ENV companion files created to show the OML of an item only. The term "envelope model" is used to refer to the model for Envelope, Source Control, and Vendor Item Control drawings. Refer to Section 14.3.15 for detailed drawing requirements.

12.24.1 An envelope assembly model **shall** be created to represent the reserved volume and interface requirements, when defined.

12.24.1.1 Datum features **shall** be created in the envelope assembly model for component constraints.

12.24.1.2 An –ENV envelope companion file **shall** be created to represent the overall reserved volume.

12.24.1.3 When a vendor model has been received, the vendor model **shall** be added to the envelope assembly model. Refer to Desktop Instruction ED-CAD-DI-022, Vendor Item Modeling, for information on converting the vendor-supplied model to use in the envelope assembly model.

12.24.1.4 The envelope assembly model (.asm) **shall** have the –ENV envelope companion file assembled until the Source Control/Vendor Item Control drawing is released.

12.24.2 The envelope assembly model **shall** be named in accordance with Section 5. This is not a companion file and will have its own part number.

12.24.3 The envelope assembly model **shall** be assembled in the using assembly.

12.24.4 The envelope assembly model **shall** be actively associated to its own WT Part, and its component and drawing **shall** be passively associated.

12.24.5 The –ENV envelope companion file model **shall** include the following when available:

- The geometry reserved for the part regardless of the vendor
- Mass properties
- Mounting hole patterns
- Electrical/fluid connections with reference designation labels
- Any key structural/mechanical interface
- Any required clearances for interfaces (e.g., wrench clearances)

12.24.6 Notional CAD models representing potential vendor models **shall** NOT be released.

13. ASSEMBLY MODELING

13.1 Start Assembly

13.1.1 The MSFC standard "Start Assembly" **shall** be used when creating a new assembly. The start files contain the foundation features (default datums, csys, parameters, views, and layers) that will ensure cross-departmental consistency.

13.1.2 The foundation features **shall** NOT be deleted or renamed in the assembly model for any reason.

13.2 Skeleton Parts

13.2.1 The skeleton part **shall** contain the foundation features by utilizing the MSFC standard start part.

13.3 Assembly Level Dependencies

13.3.1 Lateral dependencies **shall** NOT be used for dimensional or relational constraints in the assembly model.

13.3.2 All external dependencies within the model **shall** be up-to-date and be toggled to "Independent" prior to promoting to Design State or WGA and deleted prior to release.

13.4 Assembly Created Features

13.4.1 The designer **shall** NOT create assembly level cuts, holes, or any other feature that removes material.

13.4.2 Copy geometry may be used to provide a guide during feature creation, but **shall** then be removed from the model.

13.4.3 The designer **shall** assemble the –MOD or as-fabricated part where applicable. Refer to Desktop Instruction ED-CAD-DI-009, MOD File Creation, for additional information.

13.5 Component Placement Constraints

13.5.1 All components **shall** be fully constrained when placed in an assembly. Components used in mechanisms may be packaged depending on their function.

13.5.2 Packaged components **shall** NOT exist in the final assembly configuration. (While in development, the component can be packaged to facilitate analysis and clearance checks.)

13.5.3 The designer **shall** verify that the mechanism is in the correct state and/or location before being released.

13.5.4 A snapshot **shall** be created of the home position for the mechanism and set as the default location.

13.5.5 Assemblies and/or components **shall** NOT be checked into DDMS while in a "Frozen" or "Suppressed" state due to missing placement references for creation of a baseline, for WGA, at release, and at other times as required at a minimum.

13.5.6 Components **shall** be correctly located with no unintended gaps or interferences.

13.6 Common Parts

13.6.1 Common parts **shall** be inserted from program-approved folders within DDMS.

13.6.2 If a Common part does not exist in DDMS, refer to Desktop Instruction ED-CAD-DI-003, Library Components, for additional information.

13.7 Named Views and Cross-Section Datum Planes

13.7.1 Separate datum planes **shall** be created for named and cross-section views used on the detail drawing.

13.7.2 Datum Planes used for named views **shall** be renamed to **"view_*viewname*"**. For example, View A would be renamed "view_A".

13.7.3 Datum Planes used for cross-section views **shall** be renamed to **"sec_sectionname".** For example, Section A-A would be renamed "sec_A".

13.8 Related Level Drawing Model (i.e., -REL1, etc.)

13.8.1 A related model is used only for the creation of an assembly drawing when the designer does not want to change or impact the engineering model structure. This technique allows the designer to add additional information that is required at the drawing level.

13.8.2 Refer to Desktop Instruction ED-CAD-DI-016, Related Companion Files, for additional information.

13.9 Shrinkwrap™ Files

13.9.1 The designer **shall** create a Shrinkwrap file for each End Item.

13.9.2 All Shrinkwrap files **shall** have geometry to be referenced set to “None”.

13.9.3 Refer to Desktop Instruction ED-CAD-DI-010, Shrinkwrap Creation, for additional information.

13.10 Exploded Views

13.10.1 The designer may create an “Exploded View” to help make an assembly view more easily interpreted and also help facilitate manufacturing.

13.10.2 The exploded view **shall** be created at the assembly level only.

13.10.3 Drawing level exploded views **shall** NOT be created.

13.10.4 Refer to Desktop Instruction ED-CAD-DI-023, Exploded Views, for additional information.

13.11 Extraneous Entities

13.11.1 All extraneous entities should be deleted. An extraneous entity would be any entity that is not needed in the definition of the model geometry.

13.12 Large File Management

13.12.1 Partial Assemblies

Partial assemblies are allowed when an intermediate assembly model would facilitate file management and drawing creation of large assemblies and **shall** use the companion file extension -PATL1, etc.

13.13 Layouts

13.13.1 All models with parameters and/or relations driven by a layout **shall** NOT be undeclared to the layout prior to release.

13.14 Inseparable Assemblies

13.14.1 The following types of inseparable assemblies **shall** be allowed to be detailed on one drawing:

a. An assembly of vendor parts (inserts, pins, bushings, nutplates and their rivets) into a piece part.
b. Weldments in which all parts are detailed at the assembly level and not as piece parts on the same drawing.
c. Assemblies in which parts are bonded or welded together prior to final machining.
d. Flared or welded piping and tubing

13.14.2 The following types of inseparable assemblies **shall** NOT be allowed to be detailed on one drawing:

a. Any other press-fit assembly not included in 13.14.1.a.
b. Weldments which do not have post-weld machining.
c. Assemblies in which rivets are installed, except when rivets are used to attach nutplates.

14. DRAWING GUIDELINES

14.1 Drawing Standards

14.1.1 Drawings **shall** be created in accordance with MSFC-STD-2806.

14.1.2 The standard font for text on drawings **shall** be msfc02.fnt.

14.2 Drawing Template and Format

14.2.1 The designer **shall** use an approved drawing template from DDMS. Refer to Paragraph 4.1.3.

14.2.2 The designer **shall** NOT create a drawing without a model attached, except for drawings of 2D geometry and some Kit Drawings (See Sections 14.3.12 and 14.3.13). If created without a model, then the formats will not properly populate.

14.2.3 The parametric fields of the drawing format **shall** NOT be overridden, except for tabulated drawings which should have the mass in a table and have SEE TAB in the weight block on the format.

14.2.4 The preferred drawing size is a “D” size drawing format. Other drawing format sizes are permissible for those designs that can be adequately defined on them.

14.2.5 Refer to Desktop Instruction ED-CAD-DI-008, Updating Drawing Formats, for additional information.

14.3 Drawing Content and Types of Drawings

14.3.1 The drawing **shall** contain all the information necessary to complete the model definition and to inspect the part and/or assembly.

14.3.2 Parts **shall** be shown on the drawing with all the views necessary to define the part.

14.3.3 Drawing dimensions **shall** be associative to the 3D model including tabulated part tables and opposite parts.

14.3.4 Dimensions **shall** NOT be overridden within a drawing.

14.3.5 Dimensions that are called out in note form should be parametric with their associated model dimensions. See Appendix B for additional information.

14.3.6 The designer **shall** insert common symbols from the standard symbols library. Refer to Desktop Instruction ED-CAD-DI-007, Standard Symbols, for additional information.

14.3.7 Any free symbol **shall** be related to its respective view or object, so that the view and symbol move in unison.

14.3.8 Drawings of parts/assemblies **shall** be created as mono-detail (one part/assembly and one drawing) except when:

- Table driven;
- Opposite parts are detailed on the same drawing;
- Inseparable assemblies are defined on one drawing. See Section 13.14 for details of inseparable assemblies that can be detailed on one drawing.

14.3.9 SEE SEPARATE PARTS LIST **shall** be noted on the face of every drawing above the title block. Refer to Paragraph 8.11 for Parts List.

14.3.10 GSE and STE are permitted to create drawings with multi-detailed parts.

14.3.11 Drawings of Composites

14.3.11.1 A ply table **shall** be placed on the same sheet or next sheet of the representative view.

14.3.11.2 A ply rosette **shall** be placed on every composite drawing view to specify the 0, -45, 45, and 90 degrees orientation of the plies.

14.3.11.3 Section views that show ply layups may be shown at an enlarged scale, and are not required to be associative to the model. These views may be sketched in, and then turned into a drawing symbol, or sketched in as draft entities.

> ***Note:*** *If section views are sketched in, the designer* ***shall*** *group the draft entities together.*

14.3.11.4 When needed, zones for composites **shall** be noted on the drawing and NOT in the model.

14.3.12 Drawings of 2D Geometry

14.3.12.1 Drawings of 2D geometry, such as schematics, drawing trees, layouts, and diagrams, may not have a model from which the drawing is generated.

14.3.13 Kit Drawings

A Kit Drawing is generated to define a group of items that normally do not by themselves constitute a complete functional assembly. A Kit Drawing may not have a model from which the drawing is generated. Acceptable uses of Kit Drawings are:

- Gathering parts to be used for modification of existing hardware;
- Gathering parts to be installed after delivery of a Configuration Item;
- Defining parts used in test configurations.

14.3.13.1 The Kit Drawing **shall** include a list of the entire kit contents, including part numbers, titles, and quantities. The list **shall** be on the face of the drawing in tabulated form using kit_drawing_table.tbl from the tables library.

14.3.13.2 The Kit Drawing **shall** have a general note indicating the Kit's use, e.g., "USE IN CONJUNCTION WITH (APPROPRIATE DRAWING OR PROCEDURE NUMBER)."

14.3.13.3 The Kit Drawing number **shall** NOT be on the Parts List of the using assembly, but should be referenced in the notes of the using assembly as needed for clarity.

14.3.13.4 Parts that are added to the assembly from the kit shall be assigned an assembly find number with a flag note which reads: "PART TO BE OBTAINED FROM KIT DRAWING 9XMXXXXX-XXX."

14.3.14 Design Layout Drawings

14.3.14.1 A Design Layout drawing **shall** be drawn to scale with sufficient accuracy and completeness for its intended use.

14.3.14.2 When a Design Layout drawing needs to include parts or assemblies that are not assembled into the active model, a –REL companion CAD file **shall** be used.

14.3.14.3 DESIGN LAYOUT **shall** be noted on the face of every drawing above the title block.

14.3.14.4 A DDMS baseline **shall** be created upon completion of the Design Layout drawing and named in accordance with Section 5.

14.3.14.5 When a unique drawing number is not assigned, a –LAY companion CAD file **shall** be used.

14.3.15 Envelope/ Vendor Item Control/ Source Control Drawings

14.3.15.1 A specification **shall** be prepared as a separate document if the requirements for the item cannot be readily captured in the drawing notes.

14.3.15.2 The drawing and specification **shall** reference each other, so that both are required to fully define the item.

14.3.15.3 The same data **shall** NOT exist in both the drawing and the specification.

14.3.15.4 The drawing and specification **shall** be released simultaneously for initial release.

14.3.15.5 Refer to Section 12.24 for additional information.

14.4 Drawing Notes

14.4.1 The designer **shall** use the “Insert Notes” toolkit to insert Common Notes on the drawing, except for 2D drawings and Kit drawings which **shall** have notes selected as needed.

14.4.2 The designer **shall** tailor Common Notes 3 through 8 as required for part drawings other than Altered Item, Envelope, Vendor Item Control, or Source Control drawings, and Common Notes 2 and 3 for assembly drawings using the information in the Standard Notes List. The designer **shall** tailor Common Note 1 for Altered Item drawings, and Common Notes 3 and 4 for Vendor Item Control and Source Control drawings.

14.4.3 The order of the Common Notes inserted using the toolkit **shall** NOT be changed.

14.4.4 Additional notes **shall** be added after the Common Notes.

14.4.5 The designer should select any additional note from the Standard Notes List if an appropriate note exists. Refer to Desktop Instruction ED-CAD-DI-004, Standard Drawing Notes, for information on adding notes to the Standard Notes List.

14.5 Tabulated Drawing

14.5.1 The values that are table driven **shall** be shown fully parametric on the face of the drawing utilizing the repeat region functionality.

14.5.2 Refer to Desktop Instruction ED-CAD-DI-024, Tables and Tabulated Drawings, for additional information.

14.6 Drawing Information from DDMS

14.6.1 The drawing approvals captured in DDMS during the release process **shall** be populated onto the face of the drawing by DDMS before release.

14.6.2 A viewable in pdf format of the released drawing **shall** be created automatically by DDMS and associated with the drawing document in DDMS.

14.6.3 The drawing's primary model DDMS file name, lifecycle state, and version **shall** be automatically displayed on the face of the drawing.

14.6.4 The drawing's DDMS drawing object lifecycle state and version, including revision and iteration, **shall** be automatically displayed on the face of the drawing.

Legend: ® Pro/ENGINEER is a registered trademark of Parametric Technology Corporation or its subsidiaries in the U.S. and in other countries.
™ ProductView, ModelCHECK, Shrinkwrap Pro/PROGRAM, Pro/CABLING, and Pro/PIPING are trademarks of Parametric Technology Corporation or its subsidiaries in the U.S. and in other countries.

APPENDIX A

Upper Stage Initial Naming Convention

The initial CAD file name has seven or eight distinct parts which define the Project Code, Concept ID, Element, Location, Subsystem/Component Function, Sequence Number, Part Number, and Companion File Type (when applicable):

- Project Code
  - 3 alpha characters assigned by CM.
  - For US, the Project Code is CLV
- Concept ID
  - 2 numeric characters
  - All files should be named 01 initially
  - 02, 03, etc., can be used for trades
- Element
  - 2 alpha characters defined within each project
  - Represents major divisions of a project
  - For US, the Elements are:
    - CE for Crew Exploration Vehicle
    - FS for First Stage
    - GS for Ground Support Equipment
    - US for Upper Stage
    - VE for Vehicle
- Location
  - Dash (-) followed by 2 alpha characters defined within each project
  - Represents the physical location of the hardware
  - More locations can be defined as needed
  - NH for Next Higher Level is used when the vehicle location is not confined to a single place, such as the top assembly of the US
  - For US, the Locations are:
    - AS for Aft Skirt
    - CB for Common Bulkhead
    - CS for Core Stage
    - CM for Crew Module
    - EN for Engine
    - FS for Forward Skirt
    - FR for Frustum
    - IU for Instrument Unit
    - IS for Interstage
    - LA for Launch Abort System

  - LH for LH2 Tank
  - LO for LO2 Tank
  - MN for Motor and Nozzle
  - NH for Next Higher Assembly
  - PF for Pathfinder
  - SM for Service Module
  - SA for Spacecraft Adapter
  - ST for Systems Tunnel
  - TC for Thrust Cone
  - TR for Transporter
- Subsystem/Component Function
  - 2 alpha characters determined by the project
  - Represents the subsystem or function of the hardware
  - More subsystems/component functions can be defined as needed
  - IN for integration is used when there is not a single subsystem or function involved, such as an assembly of the avionics and pyrotechnics within the Interstage
  - For US, the Subsystem/Component Functions are:
    - AK for Access Kit
    - AV or Avionics (including cabling)
    - DS for Dry Structure
    - FX for Fixturing
    - HD for Handling
    - IN for Integration
    - MP for Main Propulsion System
    - MS for Mechanical System
    - PV for Purge and Vent
    - PY for Pyrotechnics
    - RC for Reaction/Roll Control System
    - SR for Servicing
    - SP for Solid Propulsion
    - TP for Thermal Protection System
    - TV for Thrust Vector Control
    - TS for Transportation
    - UM for Umbilical
    - WS for Wetted Structure (Tankage)
- Sequence Number
  - 4 numeric characters determined by the designer with the following restrictions:
    - Part and assembly files must have different model numbers in case the file extension is dropped

  - 9000 series will be used to specify the file type other than part, assembly, and drawing files
    - For example: 9021 could be the sequence number for a skeleton file
  - 0000 should be used for the top assembly file within a subsystem and vehicle location
- Part Number
  - Dash (-) followed by 3 numeric characters
  - Dash numbers will follow the convention defined in MSFC-STD-555 regarding odd dash numbers, even dash numbers, etc.
  - Most dash numbers will be -001
- Companion File Type
  - "As-Designed" does not use a type extension
  - Refer to Paragraph 5.4 for additional information

Examples of file names:

CLV01CE-LAAV0001-001	CLV part or assembly for the CEV Launch Abort System Avionics
CLV01VE-NHIN0000	CLV top assembly drawing
CLV04GS-IUHD0057-002	CLV part or assembly for the Instrument Unit Handling GSE (mirror image of the -001 part)
CLV01US-CSWS0524-001-MOD1	CLV part or assembly for the Core Stage Liquid Hydrogen Tank "As-Installed" Panel

APPENDIX B

Additional Information For Reference Only

B1 Part Accuracy (4.1.6.3)

The default value may need to be adjusted under the following conditions:

a. Placing a very small feature on a very large part
b. Intersecting (through merge or cutout) two parts of very different size.

Increasing the part accuracy can cause longer regeneration times and larger file sizes. The part will have upper and lower bounds on what the accuracy can be. If an accuracy is too tight, a value should be chosen between the given bounds.

After changing the accuracy, the model must be regenerated. Because the part is now being calculated at a higher accuracy, features may now fail, causing the designer to go into resolve mode.

The accuracy setting controls the computational accuracy of geometry calculations. The accuracy controls the shortest distance between two points that can be seen as two separate points. Pro/ENGINEER has two options for accuracy

- Relative – total accuracy is dependent upon the overall size of the model
- Absolute – directly sets a value regardless of the overall part size.

B2 ModelCHECK (4.2.5)

ModelCHECK:

- Analyzes parts, drawings, and assemblies.
- Verifies compliance with standards and proper Pro/ENGINEER modeling techniques and immediately flags modeling violations.
- Presents the results of the analysis and recommends improvements in the form of a dynamic HTML report. The ModelCHECK report appears in the browser embedded in Pro/ENGINEER.
- Promotes the use of standard design practices to improve the effectiveness of downstream users and design reuse.

ModelCHECK can be configured to identify items in violation of the design standards as either Errors or Warnings. In general, errors are those items that the user must resolve in order to submit the model for approval or release. Warnings are items that the user should resolve prior to approval or release. Even though any items identified as warnings can be considered optional (not required to be fixed), these items do represent MSFC recommended best modeling practices and users should make every attempt to resolve any warnings prior to release.

B3 Deleted

B4 Layers (6.1)

To determine what layer/layers an item is on, Right Mouse Button (RMB) click on the feature and choose Info > Feature. This will bring up a browser window that will show layer the feature is on.

Items can be moved from one layer to another by using the cut and paste option. This is accomplished by expanding the layer in the layer tree and right mouse button clicking on the item and choosing Cut Item. Then choose the correct layer, RMB click, and choose Paste Item. If an item is on multiple layers, choose the Remove Item option.

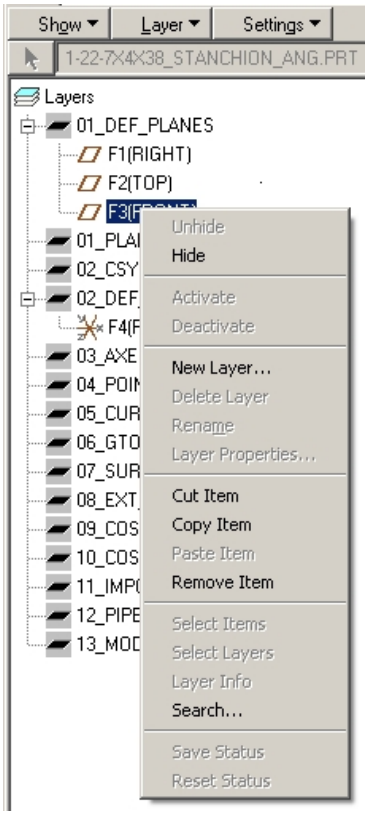

New layers can be created by RMB clicking on the layer tree and choose New Layer. The layer can be named and items can be selected from the model tree. Rules can also be set up using the rules option.

B5 Parameters (6.5)

Parameters are useful for providing information about an object. Pro/ENGINEER allows parameters to be assigned to features, drawings, and part and assembly models.

Parameters are typically used to control information, such as drawing titles, part numbers, and next assembly information.

B6 ***<u>Common Parts Library (7.3.4)</u>***

By selecting the part number from the Master List sheet, the designer can see the specific part numbers that are available in the library. The information on size, material, etc. is for reference only and the designer must refer to the part specification to confirm the proper part is chosen. The part number, CAGE code (if applicable), unit weight, and description given in the list will be automatically populated into the EPL.

B7 ***<u>Symbol Library (7.4.3)</u>***

These symbols can be accessed from the drafting application by choosing the ~~insert~~ custom symbol command and choosing browse.

B8 ***<u>Product Structure (8.6.12)</u>***

A product structure is a hierarchical representation of all assemblies and component parts necessary to assemble an end item. A product structure can be expanded (that is, expand each sub assembly to see its child parts) until the lowest level component parts are shown. A BOM report can be generated from the expanded product structure.

B9 ***<u>Deleted.</u>***

B10 ***<u>DDMS Baselines (8.9.4)</u>***

In DDMS, a “DDMS baseline” is a managed object that provides a mechanism for capturing a set of information at a particular point in time – a DDMS baseline is a “snapshot” of a precise list of PLM objects, specifying both version and iteration. The list may include Documents, CAD Documents, and WT Parts. This list is used to document specific sets of data that have either been uploaded, delivered or are at a significant design milestone.

DDMS Baselines are not formally CM-controlled, but are managed in DDMS. DDMS baselines function as follows:

- Once a DDMS baseline is created, parts and documents can be added/removed from it.
- A DDMS baseline can contain any number of parts and documents, and a part or document can be in any number of baselines.
- A DDMS baseline can contain only one version of any unique part or document

B11 Configurations (8.10)

A configuration is the specification rule that allows the system to retrieve particular versions and iterations of the DDMS objects from the database. The retrieval typically starts by selecting a specific version and iteration of an object from the system and then gathering up related information based upon the specified configuration. This allows the system to provide only the files that match the configuration specification.

The system comes out of the box with two configurations; Latest and As-Stored. Latest is an imprecise configuration that retrieves the latest version and iteration of a DDMS object that has been checked in. As-Stored is a precise configuration that selects precisely the versions and iterations of any related information based upon the "Latest" definition when the object was stored (checked in). Unless manually changed Latest is the default configuration used for retrieving information (except automatic for creation of viewables which uses As-Stored).

DDMS Baselines and Lifecycle States can also be used to specify the files to retrieve from the database. The related information can be based upon either the Model Structure or the Product Structure.

B12 Deleted.

B13 Deleted.

B14 Viewables (8.17.3)

A Viewable is a snapshot of an object's primary content in a format suitable for viewing. The format of the viewable is typically a neutral format. For 3D data this format typically requires significantly less computer resources in order view the data than that needed for the full CAD editing tool. The format for 3D data is in ProductView™ format; the 2D CAD Data is published as pdf format.

B15 Deleted.

B16 Round and Chamfers (12.13.6)

Use the CTRL key to make one round set after creating rounds using the "Intent edges" first, and then by the "Multi" selection tool.

B17 Drawing Content (14.3.5)

The following describes how to make dimensions that are called out in note form parametric with their associated model dimensions:

To let a value drive a note, the dimension symbol name must be determined using the model. All values used to create a model have dimension symbol names. An example is that a length dimension might have the name d67.

1) One way of determining the symbol name is to find the feature in the model tree, RMB click on it, and select Info > Feature. This will bring up a browser window. Scroll down to the Feature's Dimensions section and see the Dimension ID, as shown below:

FEATURE'S DIMENSIONS:

Dimension ID	Dimension Value
d66	.250 Dia
d67	.500
d68	.500
d69	.500

If several dimensions have the same value, it can be difficult to determine the correct ID number.

2) Another way to determine the symbol name is to find the feature in the model tree, RMB click on it, and select Edit. This brings up the values. Select Info, Switch Dimensions and this will change the values to the symbol name, as shown below.

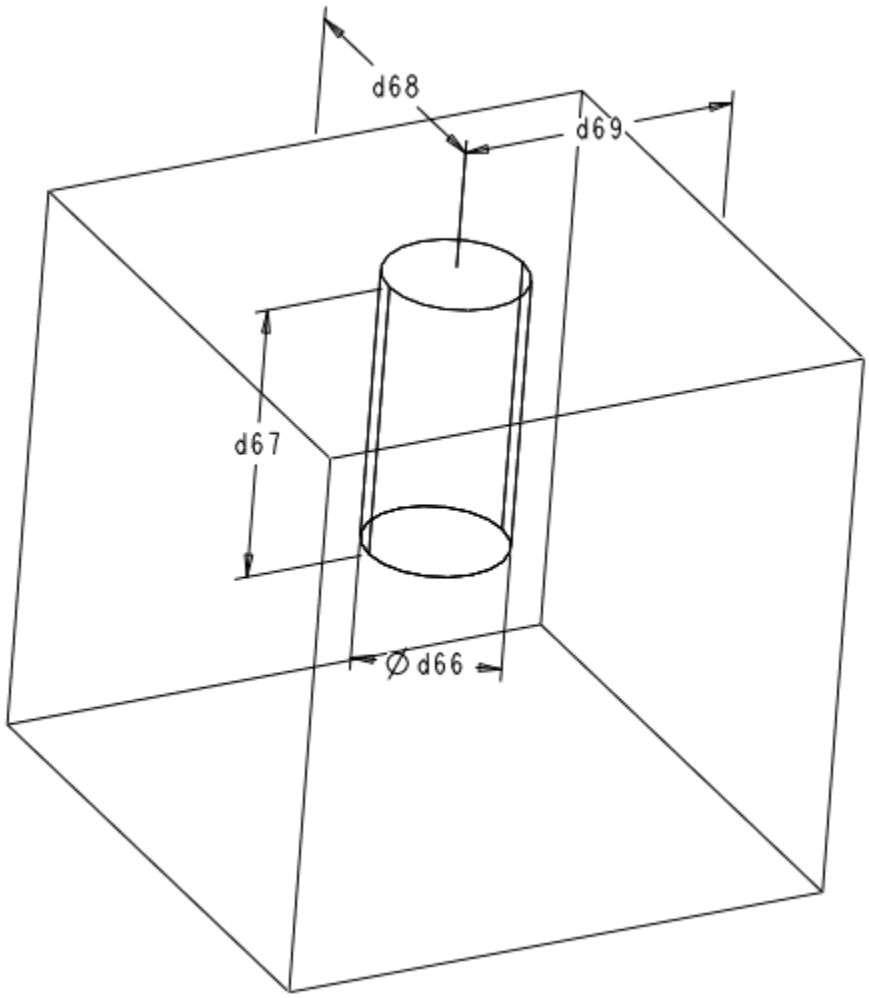

For this example, d66 will be used in a note for the diameter, and d67 will be used for depth. When typing the note, replace the value with a text string of &d## as shown in the following figure:

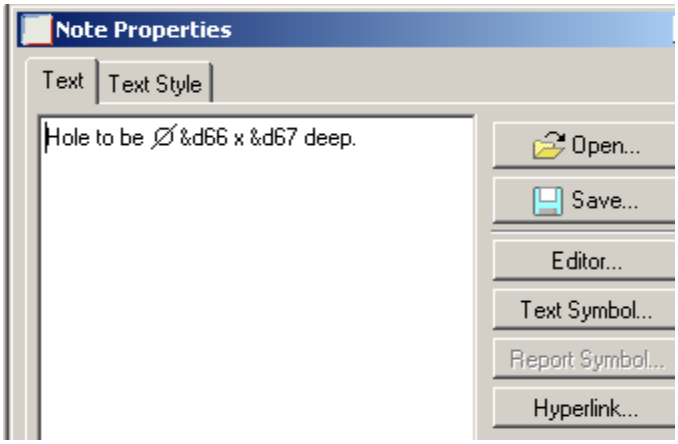

This text string will result in the following note:

Hole to be Ø.250 x .500 deep.

APPENDIX C

(Deleted.)

APPENDIX D

Designer's Checklist

Design Package Description _____

File Name _____ Rev _____

Designer _____ Checker _____

Date _____ Applicable Checklist Section: C A D W

(Circle all that apply: C for Component, A for Assembly, D for Drawing, W for WT Part)

Component Modeling Requirements ***(Refer to MSFC-STD-3528)***

Item	Description	Designer	Peer	Check
C-1	*Models are created in English units. (Paragraph 4.1.1.2)* *<u>Application Notes:</u>* *Units for English files should be set to proe_def (inch lbm second).* *This can be checked in Pro/ENGINEER using following function: Edit->setup->Units.* *This does not apply to metric vendor items and standard parts, which would be modeled using MKS. (Paragraph 4.1.1.4)*			
C-2	*Parts are modeled at the geometric mean of the tolerance band, except for drilled/reamed holes. (Paragraph 4.1.4.3, 12.12.4)* *<u>Application Notes:</u>* *Tolerance information is provided on the drawing using either shown or created dimensions.*			
C-3	*Relative accuracy is not used. (Paragraph 4.1.6.2)*			

C-4	*Errors found by ModelCHECK have been resolved. Warnings have been evaluated and resolved where possible. (Paragraph 4.2.4)* *<u>Application Notes:</u>* *Refer to EC-CAD-DI-026 for acceptable occurrences of modeling techniques that ModelCHECK lists as an error.*			
C-5	*Name and numbering convention for WT Parts, CAD Documents and CAD files are used within DDMS. (Section 5)* *<u>Application Notes:</u>* *File names are to be accordance with the Section 5 file name convention.*			
C-6	*Descriptive names for all CAD Documents and WT Parts provide appropriate detail and uses standard conventions for naming of subsystem components. (Section 5)* *The CAD Document and WT Part names match with standard practice for drawing title. (Section 5)* *<u>Application Notes:</u>* *The DDMS CAD Document Name and DDMS WT Part name will be the same as the Pro/ENGINEER file common name. The file extension has been deleted from the WT Part name.*			
C-7	*Solid geometry features (holes, fillets, cutouts, etc) are modeled in the "As-Designed" condition for detail parts, and in the "As-Installed" condition for assembled parts. (Paragraphs 5.4.2, 6.7.2.1, 8.8.1, 12.20.1)* *<u>Application Notes:</u>* *Applies to parts which are modified at assembly. Use a companion -MOD file when then "As-Installed" condition is different from the "As-Designed" condition.* *Example: Common bulkhead core would have multiple models (one for initial machined detail and another for how it appears "As-Installed" in the assembly).*			N/A

C-8	*Default layers are present, properly utilized, and have not been renamed. All non-solid layers are hidden. Items reside on only one layer. (Paragraph 6.1)*			
C-9	*Units have been assigned for parameters controlling solid geometry. (Paragraph 6.5.1)*			
C-10	*All parameters are correctly populated within the Pro/ENGINEER model (Paragraph 6.5.4.1)* *<u>Application Notes:</u>* *Alternate mass properties may be entered instead of calculated for vendor part models.* *Material assignment should be from the material library. New materials should be entered into this library when needed in accordance with ED-CAD-DI-019.*			
C-11	*Units have been assigned for all constant values used in relations. (Paragraph 6.6.2)*			
C-12	*Standard simplified representations exist within the model, are up-to-date, and meet standard definition for the representation. (Paragraph 6.7.2)* - *SIMPLE* - *OML* - *MASTER remains the default rep*			
C-13	*One part configuration model per file, except where required by business practices or by Pro/ENGINEER limitations. (Paragraph 8.8.1.3, 14.3.8)* *<u>Application Notes:</u>* *Do not have multiple details in one model (i.e. as-machined, formed and flat conditions). The MASTER rep is the condition of the model that will be manufactured. Family Tables may be used for "As-Installed" part modifications, tabulated drawings, and library parts.*			

C-14	*Internal and external threads are modeled as follows: (Paragraph 10.12)* *Internal Thread: Hole Dia. Is nominal tap drill size (sizes from Pro/ENGINEER Hole Table are acceptable)* *External Thread: Shaft Dia. Is nominal major dia.*			
C-15	*3D Solid Model contains complete feature history. This does not apply to vendor supplied models. (Paragraph 12.1.2.1)* *<u>Application Notes:</u>* *Features as modeled should remain in the model tree.* *Do not export to a neutral format and re-import to clean up features or dependencies.*			
C-16	*Inheritance features have been toggled to independent and copy geom. feature have been deleted prior to release. (Paragraph 12.1.2.1, 12.7.4)*			
C-17	*Opposite parts reside in their own part file, but have associated master definition only in the first part file. (Paragraph 12.1.2.3)* *<u>Application Notes:</u>* *Dependent mirror (opposite) model must be an exact duplicate of the as-shown model. Drawing may show as-shown and opposite.* *If an opposite model requires a change such that it is no longer an exact mirror of the as-shown model then the opposite part becomes unique at that time. A new part should be created and used for the changed model with a different drawing number and part number. The as-shown model may be used to help create the new mirror part (save-as and mirror feature in part file). The new part can then be modified as needed.* *Typical operation for revision (both as-shown and opposite must be revised together) would be to make modifications in the as-shown model and create a (new) opposite model based upon the revised as-shown model. This new model would then be uploaded to DDMS as the new revision of the opposite model.*			

C-18	*Models are created with all features (such as fillets, chamfers and holes) except where covered by Standard Notes. (Paragraph 12.1.2.6)* *<u>Application Notes:</u>* *All features required to represent the part should be present. This part file will drive the manufacturing and therefore must be geometrically accurate.*			
C-19	*Model has no suppressed or frozen features. (Paragraph 12.2.2)* *<u>Application Notes:</u>* *Generic models for family table instances are an exception to this rule.* *Does not apply to features within an inheritance feature.*			
C-20	*Deleted.*			N/A
C-21	*Created Datum Planes used for named views have been renamed to "view_viewname". (Paragraph 12.10.2)* *<u>Application Notes:</u>* *View A would be renamed "view_A".*			N/A
C-22	*Created Datum Planes used for cross-section views have been renamed to "sec_sectionname". (Paragraph 12.10.3)* *<u>Application Notes:</u>* *Section A-A would be renamed "sec_A".*			N/A

C-23	*Drilled holes, chamfers, and fillets should be created using the hole, chamfer and round tools. (Paragraphs 12.12.5, 12.13.4)* *<u>Application Notes:</u>* *Do not include these features within a sketch except where required by business practices or Pro/ENGINEER limitations.* *Use a pattern of holes instead of an extrude feature with multiple sketched holes.* *Extrusion of a circular sketch or revolution of a sketch to produce a hole is allowed based upon design intent and Pro/ENGINEER limitations.*			N/A
C-24	*Model conforms to all applicable ICDs prior to initial release.* *<u>Application Note:</u>* *Part model geometry should conform to any applicable interface skeletons.*			
C-25	*Rounds and chamfers do not have children. (Paragraph 12.13.5)* *<u>Application Note:</u>* *Acceptable exceptions are noted in ED-CAD-DI-026, Verifying 3-Dimensional CAD Models.*			
C-26	*Ply boundary curves or surfaces exist for each ply and are projected onto the correct layup surface. (Paragraph 12.22.2)*			
C-27	*Ply boundary curves or surfaces are named PLYxxxx, where xxxx represents a four digit number. (Paragraph 12.22.3)*			
C-28	*Each ply boundary curve or surface is on a separate user-defined layer that is named according to the ply name, unless ply boundaries are exactly the same. (Paragraph 12.22.4)*			
C-29	*The tooling surface definition is extended at least six inches beyond the edges of the part, is placed on a user-defined layer named 99_TOOLING_SURFACE, and is hidden. (Paragraph 12.22.5)*			
C-30	*All external references have been broken prior to release. (Paragraph 9.1.2.2)*			

Assembly Requirements ***(Refer to MSFC-STD-3528)***

Item	Description	Designer	Peer	Check
A-1	*Errors found by ModelCHECK have been resolved. Warnings have been evaluated and resolved where possible. (Paragraph 4.2.4)* *<u>Application Notes:</u>* *Refer to EC-CAD-DI-026 for acceptable occurrences of modeling techniques that ModelCHECK lists as an error.*			
A-2	*Descriptive names for all CAD Documents and WT Parts provide appropriate detail and uses standard conventions for naming of subsystem components. (Section 5)* *The CAD Document and WT Part names should match with standard practice for drawing title. (Section 5)* *<u>Application Notes:</u>* *The DDMS CAD Document Name and DDMS WT Part name will be the same as the Pro/ENGINEER file common name. The file extension has been deleted from the WT Part name.*			
A-3	*Assemblies do not incorporate any features that modify part geometry (match drill, etc.). Parts to be modified at assembly are shown in a modified ("As-Installed") state contained in separate companion part files controlled within DDMS. (Paragraph 5.4, 13.4)* *<u>Application Notes:</u>* *This means that a part would be required for the "As-Designed" condition and the "As-Installed" condition.* *"As-Installed" is a –MOD companion file.*			
A-4	*Default layers are present, properly utilized, and have not been renamed. Components do not reside on layers. All layers are hidden. Items reside on only one layer. (Paragraph 6.1)*			

Item	Description	Designer	Peer	Check
A-5	*All parameters are correctly populated within the Pro/ENGINEER model and the designated attributes in the DDMS CAD Document from the DDMS Details page contain matching values. (Paragraph 6.5.4.1)* *<u>Application Notes:</u>* *Alternate mass properties may be entered instead of calculated for vendor part models.*			
A-6	*Standard simplified representations exist within the assembly, are up-to-date, and meet standard definition for the representation. (Paragraph 6.7.3)* - *MAIN* - *EMPTY* - *MAIN_NO_FASTENERS* - *SIMPLE* - *OML*			
A-7	*No bulk items exist in the assembly, except for insulation and solid propellant. (Paragraph 6.8)*			
A-8	*Installed configurations of detail parts (flexible cable, ducting, etc.) are contained in separate part files controlled within DDMS. (Paragraph 12.20)* *<u>Application Notes:</u>* *Cables, Piping, Ducting etc. would be created in assembly in the "As-Installed" condition and a part would be created for the applicable cable, pipe or duct.*			
A-9	*There are no assembly level cuts. (Paragraph 13.4.1)* *<u>Application Notes:</u>* *MOD files are used at the part level to represent any modifications required at the assembly level.*			

Item	Description	Designer	Peer	Check
A-10	*Assembly components are fully constrained unless required for mechanisms. (Paragraph 13.5)* *<u>Application Notes:</u>* *Components used in **mechanisms** may be packaged depending on their function. A snapshot of the home position is set as the default location.*			
A-11	*Model has no suppressed or frozen features or components due to missing placement references. (Paragraph 13.5.5)*			
A-12	*Components are correctly located with no unintended gaps or interferences with other parts. (Paragraph 13.5.7)* *<u>Application Notes:</u>* *This requirement would not be applicable to components that by design should interfere. Press fit parts and threaded parts are an example of this condition.*			
A-13	*Common parts are inserted only from DDMS Common part libraries. (Paragraph 13.6)* *<u>Application Notes:</u>* *Use ED-CAD-DI-003 for commercial vendor supplied and MIL-SPEC hardware on DDMS.* *Applies to standard hardware not under design control by MSFC.*			
A-14	*Deleted.*			
A-15	*Created Datum Planes used for named views have been renamed to "view_viewname". (Paragraph 13.7..2)* *<u>Application Notes:</u>* *View A would be renamed "view_A".*			N/A

Item	Description	Designer	Peer	Check
A-16	*Created Datum Planes used for cross-section views have been renamed to "sec_sectionname". (Paragraph 13.7.3)* *<u>Application Notes:</u>* *Section A-A would be renamed "sec_A".*			N/A
A-17	*All Shrinkwrap files have the geometry referenced set to "None". (Paragraph 13.9.2)*			N/A
A-18	*Released assemblies contain only components that are released or otherwise "controlled".* *<u>Application Notes:</u>* *Also applicable to standard library parts used in assemblies.* *Controlled means that it is under CM control on DDMS (i.e. has a lifecycle status of released or vendor released).*			
A-19	*All external references have been broken prior to release. (Paragraph 9.1.2.2)*			

Drawing Requirements ***(Refer to MSFC-STD-3528)***

Item	Description	Designer	Peer	Check
D-1	*Drawing tolerances are all equal-bilateral, with the possible exception of drilled/reamed holes. (Paragraph 4.1.4.3, 4.1.4.4, 12.12.4)*			
D-2	*Errors found by ModelCHECK have been resolved. Warnings have been evaluated and resolved where possible. (Paragraph 4.2.4)* *<u>Application Notes:</u>* *Refer to EC-CAD-DI-026 for acceptable occurrences of modeling techniques that ModelCHECK lists as an error.*			
D-3	*The CAD Document and WT Part names match with standard practice for drawing title. (Section 5)* *<u>Application Notes:</u>* *The DDMS CAD Document Name and DDMS WT Part name will be the same as the Pro/ENGINEER file common name. The file extension has been deleted from the WT Part name.*			
D-4	*All drawings are controlled by layers at the drawing level, not at the model level. Layers of a drawing have their status saved such that the appearance of the drawing is retained. (Paragraph 6.1.1.4, 6.1.1.5)*			
D-5	*The material note for homogeneous solid body part drawings matches the material assigned to the model. (Paragraph 6.3.1)*			
D-6	*All parameters are correctly populated within the drawing. (Paragraph 6.5.4.2)* *<u>Application Notes:</u>* *Configuration Control parameters will be populated by CM and are not checked prior to release.*			

D-7	*The first notes for part and assembly drawings are the Common Notes placed using the toolkit. Not Applicable has been selected for any of the notes that do not apply. (Paragraph 7.2)* *<u>Application Notes:</u>* *The note will read Reserved.*			
D-8	*Standard symbols come from the approved standard symbols library. (Paragraph 7.4)*			N/A
D-9	*The Find Numbers on the drawing match the Find Numbers on the EPL. (Paragraph 8.11.2, 8.11.3)*			
D-10	*Drawings are created in accordance with MSFC-STD-2806. (Paragraph 14.1.1)*			
D-11	*Drawing dimensions are associated to 3D model including tabulated part tables. Dimensions are not overridden locally within the drawing. (Paragraph 14.3.3, 14.3.4, 14.3.5)* *<u>Application Notes:</u>* *Both shown dimension and created (driven) dimensions in the drawing are associative to the 3D model.* *Dimensions that are called out in note form are parametric with their associated model dimensions if possible.*			
D-12	*Drawing notes come from the approved standard notes library when appropriate. (Paragraph 14.4)*			
D-13	*Drawing identifies its DDMS drawing object's lifecycle state and version on the face of the drawing. Drawing identifies its primary model DDMS file name, lifecycle state, and version on the face of the drawing. (Paragraph 14.6)*			
D-14	*A pdf version of the drawing as-submitted for release is created and associated with the drawing document on DDMS. (Paragraph 14.6.2)*			

D-15	*Project approved drawing format has been used.* *<u>Application Notes:</u>* MSFC_DWG_B_FORMAT_*REV-.FRM MSFC_DWG_C_FORMAT_*REV-.FRM MSFC_DWG_D_FORMAT_*REV-.FRM MSFC_DWG_E_FORMAT_*REV-.FRM MSFC_DWG_J_FORMAT_*REV-.FRM **Latest Revision.*			
D-16	*Materials have been assigned and mass properties calculated for any companion file generated from an inheritance.* *<u>Application Notes</u>:* *This is not necessary if the companion file is generated from a family table.*			
D-17	*A ply table is on the same sheet or next sheet of the representative view of the drawing. (Paragraph 14.3.11)*			
D-18	*A ply rosette is on every view to specify the 0, -45, 45, and 90 degrees orientation of the plies.. (Paragraph 14.3.11)*			
D-19	*Zones for composites are noted on the drawing when needed. (Paragraph 14.3.11)*			

WT Part Requirements ***(Refer to MSFC-STD-3528)***

Item	Description	Designer	Peer	Check
W-1	*EPL report is correctly generated with the correct values from the Product Structure using the Release Baseline. (Paragraph 8.6.3, 8.6.9, 8.11.1)*			
W-2	*The active CAD Document for the WT Part represents the "As-Designed" part model. (Paragraph 8.8.1.1)*			
W-3	*A WT Part on DDMS is created for each Find Number on the drawing. (Paragraph 8.8.1.4)*			
W-4	*Companion files are passively associated to WT Part. (Paragraph 8.8.2.3)*			
W-5	*Drawings are passively associated to one or more related WT Part objects on DDMS. (Paragraph 8.8.2.4)*			
W-6	*The .prt, .asm, .dwg, etc. extension is deleted from the WT Part name. (Paragraph 5.7.2)*			

APPENDIX E

List of Desktop Instructions

DI Number	DI Title
ED-CAD-DI-001	Workspace Use and Troubleshooting
ED-CAD-DI-002	Naming and Renaming Files in DDMS
ED-CAD-DI-003	Library Components
ED-CAD-DI-004	Standard Drawing Notes
ED-CAD-DI-005	Simplified Representation Creation and Maintenance
ED-CAD-DI-006	Creation of Skeleton Files
ED-CAD-DI-007	Standard Symbols
ED-CAD-DI-008	Updating Drawing Formats
ED-CAD-DI-009	MOD File Creation
ED-CAD-DI-010	Shrinkwrap Creation
ED-CAD-DI-011	Data Transfer
ED-CAD-DI-012	Casting and Forging Creation
ED-CAD-DI-013	Standard Barrel Panels
ED-CAD-DI-014	Cable Routing
ED-CAD-DI-015	Piping
ED-CAD-DI-016	Related Companion Files
ED-CAD-DI-017	Creating Standard Layers
ED-CAD-DI-018	Sheet Metal Parts
ED-CAD-DI-019	Adding Materials and Generating Mass Properties
ED-CAD-DI-020	User-Defined Features
ED-CAD-DI-021	Gears, Splines, and Sprockets
ED-CAD-DI-022	Vendor Item Modeling
ED-CAD-DI-023	Exploded Views
ED-CAD-DI-024	Tables and Tabulated Drawings
ED-CAD-DI-025	Bulk Items
ED-CAD-DI-026	Verifying 3-Dimensional CAD Models
ED-CAD-DI-027	Revising CAD Documents and WT Parts
ED-CAD-DI-028	Physical Interface Matrix Creation
ED-CAD-DI-029	Modeling of Composites
ED-CAD-DI-030	Gathering Released Data in DDMS
ED-CAD-DI-031	Ground Strap Creation
ED-CAD-DI-032	Folder Structure
ED-CAD-DI-033	Create, Revise, Modify, and Promote
ED-CAD-DI-034	Modular Product Architecture
ED-CAD-DI-035	Computer-Aided Design (CAD) Management Prior to Release
ED-CAD-DI-036	Preparation and Processing of a DDMS Change Request for CAD and WT Part Release

APPENDIX F

Recommended Hole Sizes

General Purpose Structural Applications												High Strength Structural Applications					
Class I - Pre-Drill Individual Parts										Class II - Drill On Assembly							
Bolt Dia and Limits		Oversize Fit		Loose Fit		Clearance Fit		Close Fit		Tight Fit		Close Tolerance Bolt Dia and Limits		Tight Fit Non Interference		Drive or Interference Fit	
HOLE SIZES AND CLEARANCES ARE BASED ON USE OF ANY BOLT OR SCREW WHICH COMES WITHIN THE NOTED LIMITS.		FOR USE WHERE HOLE PATTERN BRIDGES SEVERAL UNITS. NONSTRESSED ACCESS DOORS AND MANY EQUIPMENT ITEMS.		FOR TENSION ATTACHMENT WITH ONLY INCIDENTAL SHEAR LOADS AND FOR GENERAL BRACKET ATTACHMENT. ETC. WHERE VIBRATION OR HAMMERING ARE NOT PRESENT.		FOR GENERAL SHEAR LOAD ATTACHMENTS WHERE MULTIPLE BOLTS ARE USED AND USUALLY NON REVERSING LOADS.		FOR SHEAR LOAD ATTACHMENTS INVOLVING ONLY ONE TIGHT BOLT WHICH IS HIGHLY STRESSED OR SUBJECTED TO FREQUENT REVERSING LOADS. MULTI-BOLT PATTERNS MUST BE DRILLED ON ASSEMBLY.		FOR CLASS II CONNECTIONS WHICH ARE REMOVABLE. USE FOR HIGH SHEAR TRANSFER IN MAJOR STRUCTURE.		HOLE SIZES AND CLEARANCES ARE BASED ON USE OF ANY BOLT OR SCREW WHICH COMES WITHIN THE NOTED LIMITS.		FOR CLASS II CONNECTIONS PERMANENT JOINT. WHERE INTERFERENCE FIT IS UNDESIRABLE.		FOR CLASS II CONNECTIONS PERMANENT JOINT. NO MOVEMENT BETWEEN PARTS.	
Size	Limits (Dia)	Hole Size	Clearance (Ref)	Hole Size	Clearance (Ref)	Hole Size	Clearance (Ref)	Hole Size	Clearance (Ref)	Hole Size	Clearance (Ref)	Size	Limits (Dia)	Hole Size	Clearance (Ref)	Hole Size	Clearance (Ref)
#4		.166 .180	Washer Required Because of Insufficient Bearing Area.	.140 .152													
#6		.193 .208		.166 .180													
#8		.219 .233		.193 .208													
#10	.189 .186	.246 .260		.219 .233	.030 .047	.199 .202	.010 .016	.190 .194	.001 .008	.1895 .1905	.0005 .0045						
1/4	.249 .246	.302 .316	.053 .070	.277 .290	.028 .044	.257 .261	.008 .015	.250 .254	.001 .008	.2495 .2505	.0005 .0045	1/4	.2492 .2487	.2495 .2505	.0003 .0018	.2489 .2505	-.0003 .0018
5/16	.312 .309	.368 .382	.056 .073	.339 .353	.027 .044	.323 .327	.011 .018	.3125 .316	.0005 .007	.3120 .3130	.0000 .0040	5/16	.3117 .3112	.3120 .3130	.0003 .0018	.3114 .3130	-.0003 .0018
3/8	.374 .371	.437 .454	.063 .083	.406 .422	.032 .051	.386 .390	.012 .019	.375 .379	.001 .008	.3745 .3755	.0005 .0045	3/8	.3742 .3737	.3745 .3755	.0003 .0018	.3739 .3755	-.0003 .0018
7/16	.437 .433	.500 .516	.063 .083	.469 .485	.032 .052	.453 .457	.016 .024	.4375 .442	.0005 .009	.4370 .4380	.0000 .0050	7/16	.4367 .4362	.4370 .4380	.0003 .0018	.4364 .4380	-.0003 .0018
1/2	.499 .495	.562 .578	.063 .083	.531 .547	.032 .052	.516 .521	.017 .026	.500 .505	.001 .010	.4995 .5005	.0005 .0055	1/2	.4991 .4986	.4995 .5005	.0004 .0019	.4988 .5005	-.0003 .0019
9/16	.562 .558	.625 .641	.063 .083	.593 .610	.031 .052	.578 .583	.016 .025	.5625 .567	.0005 .009	.5620 .5630	.0000 .0050	9/16	.5616 .5611	.5620 .5630	.0004 .0019	.5613 .5630	-.0003 .0019
5/8	.624 .620	.687 .704	.063 .084	.656 .672	.032 .052	.641 .646	.017 .026	.625 .630	.001 .010	.6245 .6255	.0005 .0055	5/8	.6240 .6234	.6245 .6255	.0005 .0021	.6237 .6255	-.0003 .0021
3/4	.749 .744	.812 .832	.063 .088	.781 .801	.032 .057	.766 .773	.017 .029	.750 .757	.001 .013	.7495 .7505	.0005 .0065	3/4	.7488 .7481	.7495 .7505	.0007 .0024	.7485 .7505	-.0003 .0024
7/8	.874 .869	.937 .958	.083 .089	.906 .926	.032 .057	.891 .898	.017 .029	.875 .882	.001 .013	.8745 .8755	.0005 .0065	7/8	.8737 .8729	.8745 .8755	.0008 .0026	.8735 .8755	-.0002 .0026
1	.999 .993	1.062 1.082	.063 .089	1.031 1.051	.032 .058	1.016 1.026	.017 .033	1.000 1.010	.001 .017	.9995 1.0005	.0005 .0075	1	.9985 .9975	.9995 1.0005	.0010 .0030	.9985 1.0005	.0000 .0030