METRIC/INCH-POUND

KSC-STD-E-0004B
AUGUST 12, 2008
Supersedes
KSC-STD-E-0004A
May 30, 1990

PNEUMATIC AND HYDRAULIC MECHANICAL COMPONENTS, ELECTRICAL DESIGN, STANDARD FOR

EAR 99 – NO LICENSE REQUIRED

The information contained in the document is technical in content, but not technical data as defined by the ITAR or the EAR and therefore is **EAR 99 NLR; no export license required.** (General Prohibition Six (Embargo) applies to all items subject to the EAR, i.e. items on the CCL and within EAR 99 – NLR. **You may not make an export or re-export contrary to the provisions of part 746 (Embargos and Other Special Controls) of the EAR and 22 CFR part 126.1 of the ITAR.) EDDS #8536**

ENGINEERING DIRECTORATE

National Aeronautics and
Space Administration

John F. Kennedy Space Center

KSC FORM 16-12 (REV. 6/95) PREVIOUS EDITIONS ARE OBSOLETE (CG 11/95)

METRIC/INCH-POUND

KSC-STD-E-0004B
AUGUST 12, 2008
Supersedes
KSC-STD-E-0004A
May 30, 1990

PNEUMATIC AND HYDRAULIC MECHANICAL COMPONENTS, ELECTRICAL DESIGN, STANDARD FOR

Approved by:

Patrick A. Simpkins
Director of Engineering

JOHN F. KENNEDY SPACE CENTER, NASA

CONTENTS

1. SCOPE 1

2. APPLICABLE DOCUMENTS 1
2.1 Governmental 1
2.2 Non-Governmental 2

3. DEFINITIONS 3

4. REQUIREMENTS 3
4.1 Electrical Wiring 3
4.1.1 Wire Identification Code 3
4.1.2 Terminating 3
4.1.3 Lacing or Sleeving 4
4.1.4 Slack Wiring 4
4.1.5 Hookup Wire 4
4.1.6 Wire Gage 4
4.1.7 Magnetic Wire 4
4.2 Solenoid Coils 4
4.2.1 Hookup 4
4.2.2 Impregnation and Encapsulation 5
4.2.3 Sealing 5
4.2.4 Operating Voltage Requirements 5
4.3 Switching Assemblies 5
4.3.1 Makeup and Qualification 5
4.3.2 Sealed Units 5
4.3.3 Nonsealed Units 6
4.3.4 Warning Label 6
4.3.5 Current and Voltage Rating 6
4.3.6 Voltage Drops 6
4.3.7 Switching Assemblies Requiring a Power Source 7
4.4 Position Indicators 7
4.4.1 Sensor Position Indication 7
4.4.2 Sensor Actuation 8
4.4.3 Independence of Circuits 8
4.4.4 Operating Voltage Requirements 8
4.5 Potting Compound 8
4.5.1 Material 8
4.5.2 Molds 8
4.5.3 Coverage 8
4.6 Electrical Connectors 9
4.6.1 Standard Connectors 9
4.6.2 Hermetically Sealed Units 9

4.6.3 Connector Insulation 9
4.7 Pin Functions 9
4.7.1 Single Solenoid With a 2-Pin Connector 9
4.7.1.1 Single Solenoid and Indicator Switch With 2-Pin and 3-Pin Connectors 10
4.7.1.2 Explanation of Operation 10
4.7.2 Double Solenoid Valve With a 3-Pin Connector 11
4.7.3 Solenoid and Indicator Switch With 4-Pin Connector 12
4.7.4 Double Solenoid Valve With a 3-Pin Connector for Position Indicator 12
4.7.5 Solenoid and Indicator Switch With a 5-Pin Connector 13
4.7.6 Double Solenoid Valve With a 6-Pin Connector for Position Indication 14
4.7.7 Switches (Limit, Indicator, and Others) 14
4.7.8 Potentiometer-Type Transducers 15
4.8 Insulation Resistance 16
4.9 External Markings 16
4.9.1 Diagrams 16
4.9.2 Connector Designations 16
4.9.3 Other Markings 17
4.10 Testing 17
4.11 Documentation 17

5. QUALITY ASSURANCE PROVISIONS 17
5.1 Inspectability 17
5.2 Integrity Control 17
5.3 Inspections and Tests 17
5.4 Contractual Provisions 18

6. PREPARATION FOR DELIVERY 18

7. NOTES 18
7.1 Intended Use 18

FIGURES

Figure 1. Typical Voltage Drop Test Setup 7
Figure 2. Single Solenoid With 2-Pin Connector 10
Figure 3. Single Solenoid and Indicator Switch With 2-Pin and 3-Pin Connectors 11
Figure 4. Double Solenoid With 3-Pin Connector 11
Figure 5. Solenoid and Indicator Switch With 4-Pin Connector 12
Figure 6. Double Solenoid Pilot Valve and Main Valve 13
Figure 7. Solenoid and Indicator Switch With 5-Pin Connector 13
Figure 8. Double Solenoid Valve With a 6-Pin Connector for Position Indication 14
Figure 9. Switches (Limit, Indicator, and Others) 15
Figure 10. Potentiometer-Type Transducers 16

ABBREVIATIONS, ACRONYMS, AND SYMBOLS

°C	degree Celsius
°F	degree Fahrenheit
A	ampere
ANSI	American National Standards Institute
ASTM	American Society for Testing and Materials
AWG	American Wire Gage
CCW	counterclockwise
DC	direct current
DTL	detail
GSE	ground support equipment
KSC	John F. Kennedy Space Center
M	mega (1×10^6)
MIL	military
NASA	National Aeronautics and Space Administration
NEMA	National Electrical Manufacturers Association
NPD	NASA Policy Directive
psi	pound per square inch
SAE	Society of Automotive Engineers
STD	standard
V	volt
Ω	ohm

This page intentionally left blank.

PNEUMATIC AND HYDRAULIC MECHANICAL COMPONENTS, ELECTRICAL DESIGN, STANDARD FOR

1. SCOPE

This standard establishes the requirements applicable to the electrical design of pneumatic and hydraulic mechanical components at the John F. Kennedy Space Center (KSC), NASA. This standard applies to those components located in nonconventional facilities and ground support equipment (GSE) where the natural or induced environment is severe and component reliability is essential.

2. APPLICABLE DOCUMENTS

The following documents form a part of this document to the extent specified herein. When this document is used for procurement, including solicitations, or is added to an existing contract, the specific revision levels, amendments, and approval dates of said documents shall be specified in an attachment to the Solicitation/Statement of Work/Contract.

2.1 Governmental

National Aeronautics and Space Administration (NASA)

NPD-1280.1	NASA Management System Policy

John F. Kennedy Space Center, NASA

75M13302	Connector Inspection Specification
75M13308	Insulating Gaskets and Bushings for Electrical Connectors
KSC-E-165	Electrical Ground Support Equipment Fabrication, Specification for
KSC-S-126	Sealing of Electrical Components and Enclosures, Specification for
KSC-STD-132	Potting and Molding Electrical Cable Assembly Terminations
KSC-STD-152	Graphical Symbols for Drawings

KSC-STD-E-0010	Soldering of Electrical Connections (Hand or Machine)
KSC-STD-E-0015	Marking of Ground Support Equipment

Military

MIL-DTL-16878	Wire, Electrical, Insulated, General Specification for
MIL-DTL-5015	Connectors, Electrical, Circular Threaded AN Type, General Specification for
MIL-STD-681	Identification Coding and Application of Hook Up and Lead Wire
MIL-W-5086	Wire, Electric, Polyvinyl Chloride Insulated, Copper or Copper Alloy

(Copies of specifications, standards, drawings, and publications required by suppliers in connection with specified procurement functions should be obtained from the procuring activity or as directed by the Contracting Officer.)

2.2 Non-Governmental

American National Standards Institute/National Electrical Manufacturers Association

ANSI/NEMA-MW-1000	Magnet Wire

American Society for Testing and Materials (ASTM)

ASTM-D5363	Standard Specification for Anaerobic Single-Component Adhesives (AN)

Society of Automotive Engineers (SAE) International

SAE-AS50861	Wire, Electric, Polyvinyl Chloride Insulated, Copper or Copper Alloy

3. DEFINITIONS

For the purpose of this document, the following definitions shall apply.

a. **Component:** The smallest assembled item identifiable as a complete, functioning hardware entity that performs a distinctive function in the operation of an item of equipment or a system.

b. **Ground Support Equipment (GSE):** All equipment necessary to support the operations of receiving, handling, assembly, test, checkout, servicing, and launch of space vehicles.

c. **Nonconventional Facilities and Equipment:** Nonconventional facilities and equipment that are program-oriented or experimental in nature and comprise test facilities, launch complexes, operational or research facilities, towers, and similar special-purpose facilities or equipment whose structures are characterized by unusual or inadequately defined loading conditions, a lack of established design precedent, or frequent modifications to support changes in operational requirements.

4. REQUIREMENTS

4.1 Electrical Wiring

4.1.1 Wire Identification Code

All wiring required in the fabrication and utilization of components and materials covered by this standard shall be identified as specified herein and by color code in accordance with MIL-STD-681. Each wire shall be coded separately. Wire coding shall be identified on the manufacturer's schematic or the schematic part of the manufacturer's drawing.

4.1.2 Terminating

Internal electrical wiring that requires the joining of two or more wires shall be terminated on the existing terminals of the coil, switch, connector, printed circuit board, terminal block, or other device if the terminal size permits. If the terminal size does not have the capacity for two or more wires as needed, an auxiliary terminal that is supported and insulated shall be provided. All soldered joints shall conform to the requirements of KSC-STD-E-0010. Where soldering is impractical, brazing, welding, or spot welding may be used in lieu of soldering upon approval of the responsible design organization. The weld must be large enough to carry current that is equivalent to or greater than the largest current at the joint and throughout any cross section of the joint without developing hot spots or overheating in excess of the normal temperature of any conductor joining the termination. Terminations shall be potted or encapsulated in accordance with KSC-STD-132.

4.1.3 Lacing or Sleeving

Wiring shall be laced, tied, or sleeved as specified in KSC-E-165, as required, to prevent damage by chafing or interfering with mechanical operation.

4.1.4 Slack Wiring

Wire shall have sufficient excess length to allow for one removal and replacement of the electrical connector if required.

4.1.5 Hookup Wire

Hookup wire shall be 19-strand, at a minimum, and shall be in accordance with MIL-DTL-16878 or Type 1 of MIL-W-5086 for temperatures up to 105 degrees Celsius (°C) (221 degrees Fahrenheit [°F]). In areas where component temperatures are above 105 °C (221 °F), the wire that is used shall be NEMA HP 3, Type E (without a nylon jacket), as specified in MIL-DTL-16878, for temperatures up to 200 °C (392 °F).

4.1.6 Wire Gage

The gage of hookup wire shall be no smaller than 24 American Wire Gage (AWG) for a maximum current of 3 amperes (A), 22 AWG for a maximum current of 4 A, and 20 AWG for a maximum current of 5 A. Bare, solid-tinned 16 AWG copper wire shall be used where there is bussing of adjacent terminals. For special applications and applications where wire is subject to a greater current, wire specifications shall be approved by the cognizant NASA design activity.

4.1.7 Magnetic Wire

Wire to be used in solenoid coils and similar applications shall be in accordance with Class 200 of ANSI/NEMA-MW-1000.

4.2 Solenoid Coils

4.2.1 Hookup

Hookup wire leads shall be continuous from the solenoid coil wire terminations to the solder cups of the connector. Connections at the coil shall be enclosed by encapsulation or potting in accordance with KSC-STD-132. Where coils operate at temperatures above 140 °C (284 °F), the leads shall be brazed or welded to the coil wire.

4.2.2 Impregnation and Encapsulation

Solenoid coils shall be vacuum-impregnated with silicone compounds and then totally sealed or encapsulated with a material capable of withstanding deterioration caused from, or by, the maximum heat generated under continuous operation at maximum voltage and deterioration caused from limited contact with corrosive vapors and salt air.

4.2.3 Sealing

Solenoid coils shall be either hermetically sealed to meet the requirements for the Grade A seals specified in KSC-S-126 or totally encapsulated as specified in KSC-STD-132.

4.2.4 Operating Voltage Requirements

Solenoid valves shall operate satisfactorily at the rated pneumatic and/or hydraulic pressures as follows:

a. During continuous operation, the solenoid shall hold-in with any applied voltage from 18 volts direct current (VDC) to 30 VDC.

b. Upon increasing the applied voltage from 0 VDC to 30 VDC, the solenoid shall pull in (actuate) within the range of 8 VDC to 18 VDC.

c. Upon decreasing the applied voltage from 30 VDC to 0 VDC, the solenoid shall drop out (deactuate) within the range of 17 VDC to 1 VDC.

4.3 Switching Assemblies

4.3.1 Makeup and Qualification

All switching devices, circuit-making or circuit-breaking, shall consist of an assembly of the required number of single-pole, double-throw, hermetically sealed switch units (4.3.2). The responsible design organization shall approve any use of dual, multipole, and special units. Hookup wire leads shall be continuous from the coil magnet wire termination to the solder cups of the connector. Connections at the coil shall be enclosed by encapsulation or potting in accordance with KSC-STD-132.

4.3.2 Sealed Units

Sealed-unit switching devices shall be hermetically sealed to meet the requirements for Grade A sealing as specified in KSC-S-126 (metal to metal and metal to ceramic or glass). Every attempt should be made to attain the highest possible grade of sealing since sealed units may be used in all locations. Nonsealed units shall be limited to use within protected areas and identified in accordance with 4.3.4 of this standard. Enclosures of switching assemblies shall provide hermetic sealing between the circuit-making or circuit-breaking contact points and the exterior of the device. This seal may be provided by sealing the assembly case or any subenclosure down to the

enclosure of the switching unit itself. Where hermetic sealing of switch points is provided by subenclosures, the sealing of exterior enclosures that house the hermetic subenclosure may be either Grade A, B, or C as specified in KSC-S-126. There shall be no conducting surface that is not protected by Grade B or C sealing of conductor insulation, potting, molding, conformal coating, or encapsulation or Grade A sealing in combination with Grade B or C.

4.3.3 Nonsealed Units

Nonsealed switching devices may be used if completely enclosed in a compartment that is hermetically sealed to meet the requirements for Grade A seals as specified in KSC-S-126. This sealing may be provided by the sealing of the outer enclosure of the assembly case or any subenclosure down to the housing of the switching unit itself.

4.3.4 Warning Label

All switching devices that are not sealed, as specified in 4.3.2 of this standard, shall have a warning label legibly and permanently affixed. The warning label shall read as follows: "NOT EXPLOSIONPROOF." The label shall be placed on the component assembly so that it is conspicuous after normal mounting, preferably near the nameplate or part number.

4.3.5 Current and Voltage Rating

Switching devices shall be rated a minimum of 3 A resistive load or 1.5 A inductive load at 28 VDC for 10,000 cycles of operation.

4.3.6 Voltage Drops

Under a rated resistive load as specified in 4.3.5, the associated load and contact drop shall not exceed 0.3 V. The vendor shall certify that the design is capable of retaining a voltage drop of less than 0.5 V after 10,000 cycles of operation. The switching device shall function, as required, to enable testing of all contacts. Measurements shall be taken at the terminals of a connector mated with the component connector while the maximum-rated load current is maintained. (See Figure 1.)

Voltage Drop Test Procedure – Connections shall be made from the negative terminal of the power source to wire well A of the mating connector. The negative voltmeter probe shall be attached to wire well A for reading with the sensor switch element deactuated. Connections from the power source negative and the meter probe shall be removed from the mating connector of wire A and shall be connected to wire well C for reading after the sensor switch has been actuated. The rheostat shall be in the position where there is the greatest resistance and lowest current; and the power switch shall be actuated or deactuated properly before closing the power switch for each contact test. The rheostat resistance shall be slowly decreased until the current increases to the switch element's rated current. The voltage drop readings shall be taken at this time. (See Figure 1.)

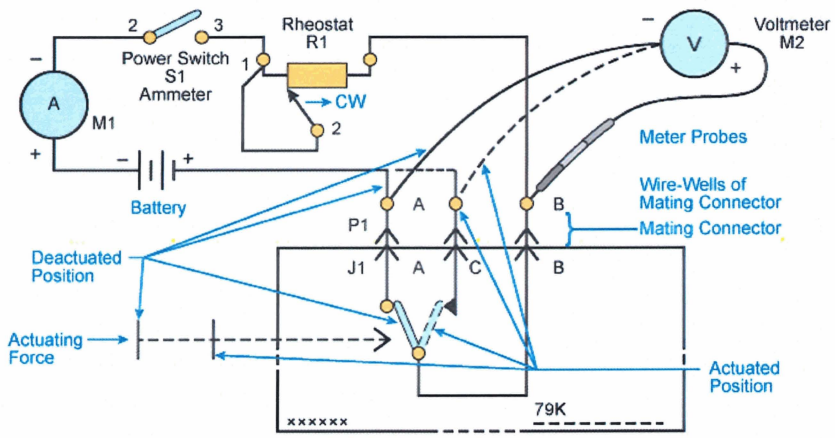

Figure 1. Typical Voltage Drop Test Setup

4.3.7 Switching Assemblies Requiring a Power Source

Switching assemblies such as proximity, photo/mechanical, or others requiring a power source to operate an amplifier or other electrical conversion within the device shall be capable of operating continuously at an input voltage of 18 VDC to 36 VDC.

4.4 Position Indicators

4.4.1 Sensor Position Indication

A position indication shall be made by the positive actuation of a sensing device or switch operated by pressure, presence, or influence (mechanical, magnetic, or electromagnetic). In no case shall a lack or absence of actuation be used to make an assumption about the position indication. For example, an indication of a closed valve can only be given by a switch that is actuated by the valve being in the closed position (using a tolerance as applicable). The normally open contacts of the switch would thus be closed. Either the normally closed contacts or the normally open contacts of this switch may be used in various circuits but never to indicate anything other than that the valve is in the closed position. An assumption may be made about the open position of the valve based on the normally closed contacts of the same switch upon its deactuation. If more than one position indication is desired, an indicating device for each position shall be actuated when the component attains that position.

4.4.2 Sensor Actuation

Cam-type devices may be used to actuate sensors as long as positive actuation of each position sensor is attained at the indicating position of the sensor. Cam detente linkages shall not be used to deactuate sensors at the indicating position of the sensors. For a component positioned by an actuating or piloting device that is either part of the assembly or separate, the positions of the component shall be indicated by sensors directly actuated by the position of the component.

4.4.3 Independence of Circuits

Single-contact connectors shall not be used to accommodate part of a circuit if other parts of the same circuit are connected to any other connector or its component parts. Grounding (if specified) shall be wired to the last connector pin. In no case shall ground or frame connections be connected to any switch circuit, coil, actuating, or sensing device. All actuating, sensing, and indicating circuits shall be insulated from the frame or ground by a minimum of 20 megohms (MΩ), measured at a potential of 500 VDC.

4.4.4 Operating Voltage Requirements

Position indicators shall function with any applied voltage from 18 VDC to 36 VDC.

4.5 Potting Compound

4.5.1 Material

The material and procedure for potting the rear of connectors and for covering connections of switches shall be epoxy as specified in KSC-STD-132. Where it is impossible for epoxy to adhere to components, transparent polyurethane shall be used in accordance with KSC-STD-132. For special applications, it may be necessary to use other materials as specified on the individual control drawings and authorized by the responsible design organization.

4.5.2 Molds

Dimensions and shapes of molds may vary for different applications, except that strain relief must be maintained from the connection joint to the wire insulation.

4.5.3 Coverage

All potting, molding, and conformal coating of wiring and connections within any enclosure not sealed in accordance with the Grade A standards specified in KSC-S-126 shall be capable of withstanding salt water or an explosive gas mixture leaking into and filling the enclosure.

4.6 Electrical Connectors

4.6.1 Standard Connectors

Unless otherwise specified, electrical connections to electromechanical components shall be made by using connectors in accordance with MIL-DTL-5015, as required by the physical design of the unit and the maximum allowable number of contacts (six per connector).

4.6.2 Hermetically Sealed Units

Where hermetic sealing to a steel component body is required, the connector shall be 300 series, weldable stainless steel, passivated after being welded to the component, and hermetically sealed in accordance with the Grade A standards specified in KSC-S-126. The insulator shall be hermetically sealed to the shell structure and pins with fused glass. The pin contacts shall be 300 series stainless steel or shall be made of a comparable material such as a corrosion-resistant, nonmagnetic metal with an outer plating of 0.0005-inch nickel. Pin dimensions shall meet the inspection requirements of 75M13302.

4.6.3 Connector Insulation

Connectors that have metal dissimilar to that of the connector mounting area on the component assembly shall be insulated from the mounting surface by use of polychloroprene gaskets, in accordance with drawing 75M13308, and polychlorotrifluoroethylene hardware bushings as required to obtain a minimum of 20 MΩ insulation at a potential of 500 VDC between the connector body and the component body. Connector mounting hardware shall be secured from vibration by using (1) a sealing compound that meets the requirements of AN0131 of ASTM-D5363 or (2) a corrosion-resistant lockwire insulated with polytetrafluoroethylene tubing to prevent the lockwire from causing an electrical short between the hardware and the connector. Therefore, caution should be exercised to ensure all internal wiring and subenclosures are within the intent of this standard (4.3.2).

4.7 Pin Functions

4.7.1 Single Solenoid With a 2-Pin Connector

The connector terminating the solenoid coil shall be designated J1. The lead from the innermost winding layer shall be connected to pin A of the connector (negative), and the lead from the outermost winding layer shall be connected to pin B of the connector (positive). (See Figure 2.)

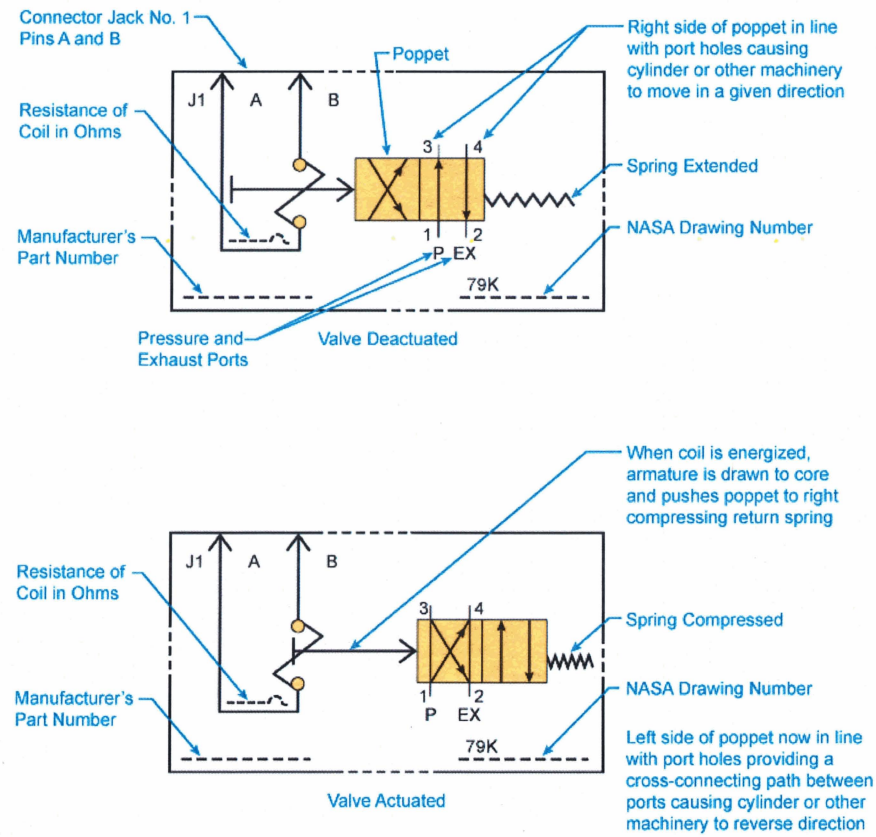

Figure 2. Single Solenoid With 2-Pin Connector

4.7.1.1 Single Solenoid and Indicator Switch With 2-Pin and 3-Pin Connectors

In a single solenoid application (if a second connector is added to accommodate a position indicator switch), the first connector (J1) shall be wired as specified in 4.7.1. The added connector shall be a 3-pin connector and shall be compatible with the following external circuitry (see Figure 3): pin B shall be the switch common, pin C shall be a closed circuit to pin B when the solenoid is energized, and pin A shall be a closed circuit to pin B when the solenoid is deenergized.

4.7.1.2 Explanation of Operation

When the solenoid is deenergized, the return spring keeps the poppet and the position sensor switch positioned as shown in Figure 3, and pressure port hole 1 and out port hole 2 are closed. When the solenoid is energized, the armature is attracted toward the core of the coil, moving the poppet to the right, allowing the pressure from port 1 to pass out of port 2, actuating the sensor

switch to connect J2 pin B to J2 pin C, and compressing the return spring. Conditions return to those shown in Figure 3 when the solenoid is deenergized.

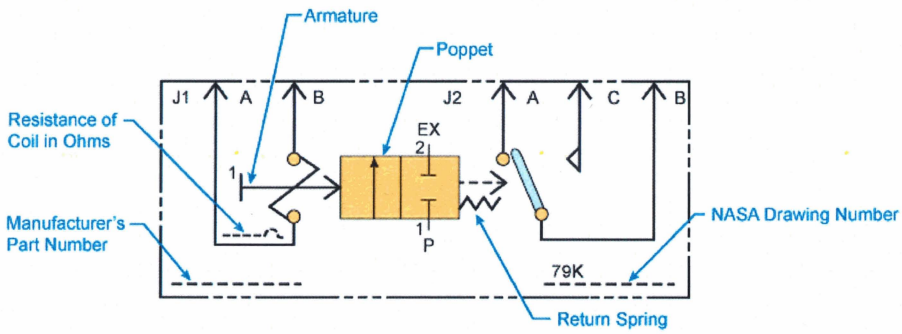

Figure 3. Single Solenoid and Indicator Switch With 2-Pin and 3-Pin Connectors

4.7.2 Double Solenoid Valve With a 3-Pin Connector

A double solenoid valve may have the leads from both solenoid coils combined into one 3-pin connector. Pin A shall be common to both solenoid coils, pin B shall be for the solenoid designated number 1 or A, and pin C shall be for the pin designated number 2 or B. (See Figure 4.)

Explanation of Operation – The valve in Figure 4 is shown with both solenoids deenergized; main valve ports 5, 6, 7, and 8 closed; both main valve positioning cylinders vented through pilots to exhaust ports 2 and 3; and cylinder pressuring ports 1 and 4 closed. If solenoid number 1 is energized, pressure is applied to the main valve cylinder through port 1 moving the main valve poppet to the right, connecting main port 5 to port 8, and connecting port 7 to port 6. All conditions as shown in Figure 4 will return when the solenoid is deenergized. If solenoid number 2 is energized, pressure is applied to the main valve cylinder through port 4 moving the main poppet to the left, connecting main port 5 to port 7, and connecting port 8 to port 6. All conditions will return as shown in Figure 4 when the solenoid is deenergized.

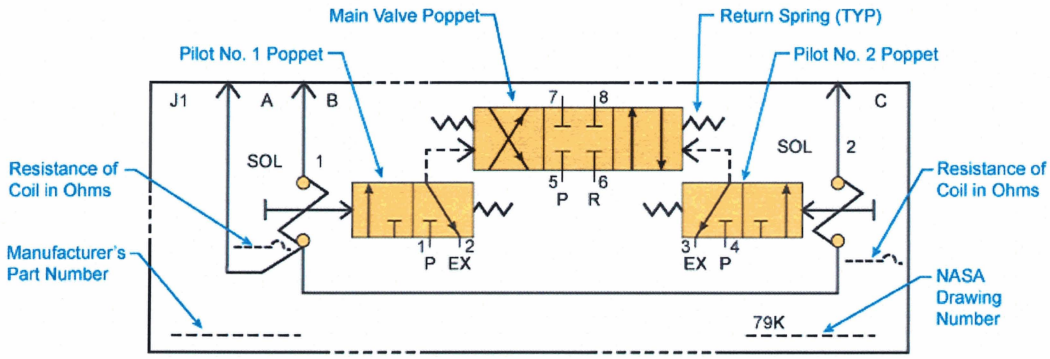

Figure 4. Double Solenoid With 3-Pin Connector

4.7.3 Solenoid and Indicator Switch With 4-Pin Connector

In Figure 5, a 4-pin connector is shown wired to a solenoid coil and indicator switch. Pins A and B are wired in accordance with Figure 2, pin D is wired to a switch common, and pin C is wired to the normally open contact. (See Figure 5.)

Explanation of Operation – Figure 5 shows the solenoid valve with the coil deenergized, the poppet to the left, and the sensor deactuated. The right side of the poppet is in line with the port holes, providing passage between ports 1 and 3 with port 2 closed. When the coil is energized, the armature is drawn toward the core moving the poppet to the right so that the left side of the poppet lines up with the ports, providing passage between ports 2 and 3, closing port 1, and compressing the return spring. Various modes of operation are available depending upon which ports are connected to the pressure, exhaust, and the apparatus being controlled by the valve.

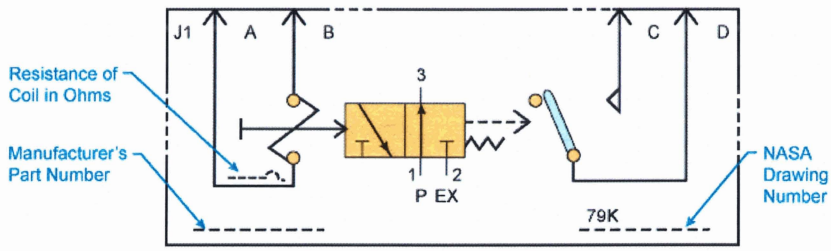

Figure 5. Solenoid and Indicator Switch With 4-Pin Connector

4.7.4 Double Solenoid Valve With a 3-Pin Connector for Position Indicator

A double solenoid valve may be wired with three connectors; one 3-pin connector for the position indicator switch and one 2-pin connector for each of the solenoid coils. Each of the 2-pin connectors shall be wired to the solenoid coils as shown in Figure 2. Solenoid number 1 or A is connected to J1, and solenoid number 2 or B connected to J2. In connector J3, pins B and C present a closed circuit when solenoid number 1 or A is energized, and pins B and A present a closed circuit when solenoid number 2 or B is energized. (See Figure 6.)

Explanation of Operation – Figure 6 shows solenoid number 2 as being operated last, main valve ports 3 and 4 closed, and the main cylinder providing passage to exhaust port 2 with port 1 closed. When solenoid number 2 is deenergized, neither valve changes position. When solenoid number 1 is energized, the pilot poppet moves to the right, allowing pressure to pass from pilot port 1 to the main valve cylinder, opening main ports 3 and 4.

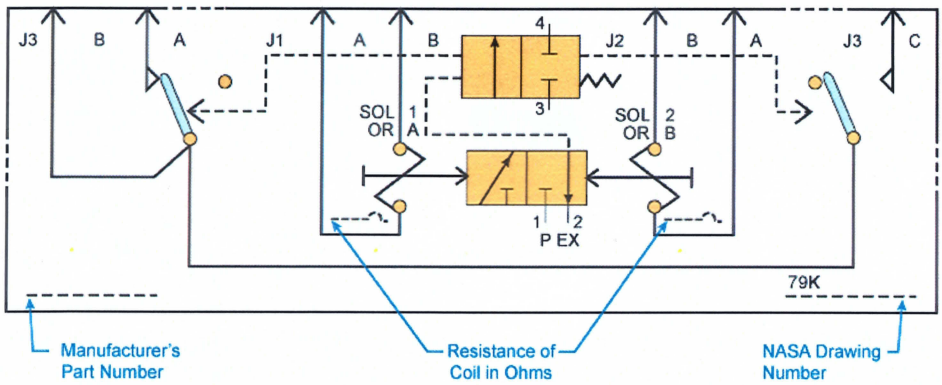

Figure 6. Double Solenoid Pilot Valve and Main Valve

4.7.5 Solenoid and Indicator Switch With a 5-Pin Connector

In Figure 7, a 5-pin connector is shown wired to a solenoid valve and indicator switch. Pins A and B are wired to the solenoid coil as shown in Figure 3. Pin D is wired to the switch common, pin C is wired to present a closed circuit between pins C and D when the solenoid is deenergized, and pin E is wired to present a closed circuit between pins D and E when the solenoid is energized. (See Figure 7.)

Explanation of Operation – With the position sensor deactuated as shown in Figure 7, the return spring keeps the armature and the poppet to the left; pressure port 1 is connected through the poppet to port 3; exhaust port 2 is closed; and J1 pin D is connected through the sensor switch to J1 pin C. When the solenoid is energized, the armature moves the poppet to the right, lining up the left side of the poppet with the ports, connecting exhaust port 2 to port 3, and closing pressure port 1. The poppet compresses the return spring and actuates the sensor switch, connecting J1 pin D to J1 pin E. When the solenoid is deenergized, the return spring extends, returning the poppet to the left and deactuating the sensor as shown in Figure 7.

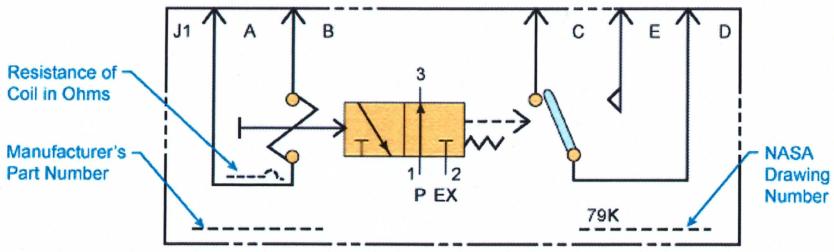

Figure 7. Solenoid and Indicator Switch With 5-Pin Connector

4.7.6 Double Solenoid Valve With a 6-Pin Connector for Position Indication

A double solenoid valve may use a 6-pin connector for position indication, in addition to the two 2-pin connectors used for the solenoid coils. The leads from the coil of solenoid number 1 or A are connected to pins A and B of connector J1. The leads from the coil of solenoid number 2 or B are connected to pins A and B of connector J2. On 6-pin connector J3, pins B and C, followed by pins E and F, present closed circuits when the solenoid designated number 1 or A is energized. Pins E and D, followed by pins A and B, present closed circuits when the solenoid designated number 2 or B is energized. (See Figure 8.)

Explanation of Operation – The main valve poppet has no return springs and remains where last positioned. Pilot solenoid number 2 would have been energized last to position the main valve as shown in Figure 8. Pilot poppets are as shown due to their return springs and neither solenoid is energized. Switch S2 is shown deactuated and S1 is shown actuated due to the position of the main valve to the left. When solenoid valve 1 is energized, pressure from pilot port 4 moves the main valve poppet to the right, applying pressure from the main port 1 to port 3, closing exhaust port 2, and allowing S1 to deactuate and actuate S2. When solenoid number 1 is deenergized, main switches S1 and S2 remain unchanged until solenoid number 2 is operated to return them as shown in Figure 8.

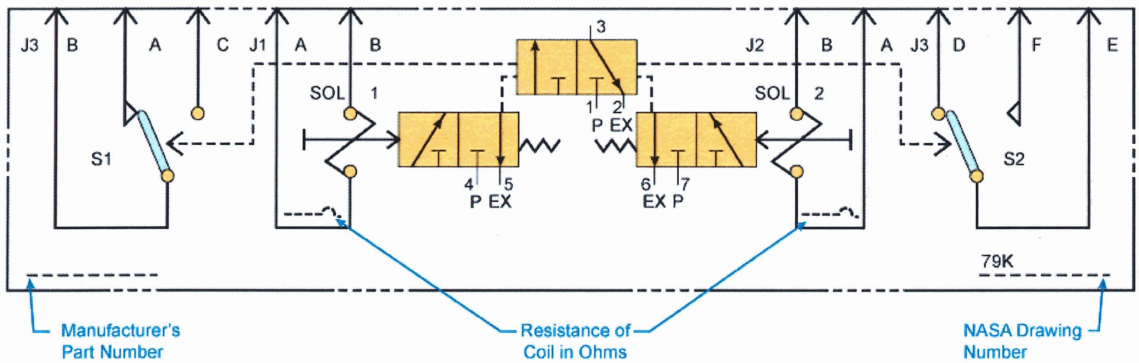

Figure 8. Double Solenoid Valve With a 6-Pin Connector for Position Indication

4.7.7 Switches (Limit, Indicator, and Others)

For single-pole, double-throw switches (Figure 9), pin B shall be common. Pin B to pin C shall present a closed circuit when the switch is actuated, and pin B to pin A shall present a closed circuit when the switch is deactuated. For a double-pole, double-throw switch (Figure 9), section 1 shall be wired as the single-pole, double-throw switch; section 2 shall be wired so that pin E is wired to switch common; pin E to pin F shall present a closed circuit when the switch is actuated; pin E to pin D shall present a closed circuit when the switch is deactuated.

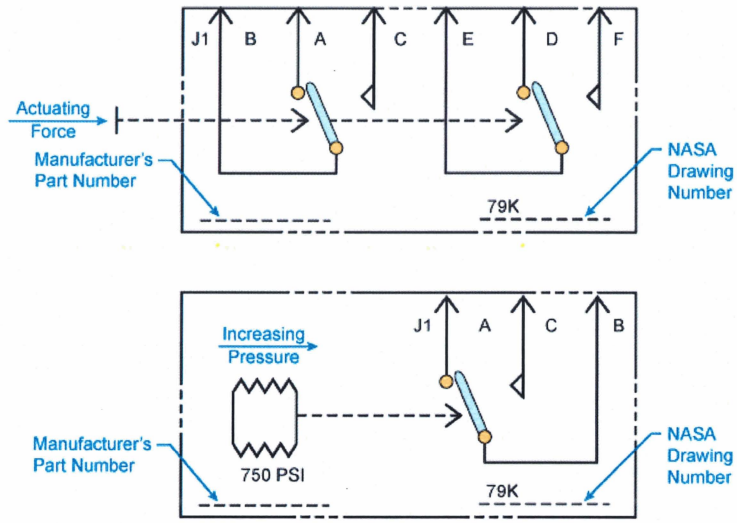

Figure 9. Switches (Limit, Indicator, and Others)

4.7.8 Potentiometer-Type Transducers

For potentiometer-type transducers, a 3-pin connector is used for a single section or a 6-pin connector is used for a double section. Pin B shall be wired to the wiper of the first or single section. Pins A and B shall be wired so that the circuit A-B will present a minimum or low resistance with the wiper arm in the counterclockwise or deactuated position. The circuit from pin B to pin C shall present a minimum or low resistance with the wiper arm in the clockwise or actuated position. If the potentiometer is a double-section type, pin E shall be wired to the second section wiper arm. The circuit from pin E to pin D shall present a minimum or low resistance with the wiper in the counterclockwise or deactuated position. The circuit from pin E to pin F shall present a minimum or low resistance with the wiper arm in the clockwise or actuated position, as shown in Figure 10.

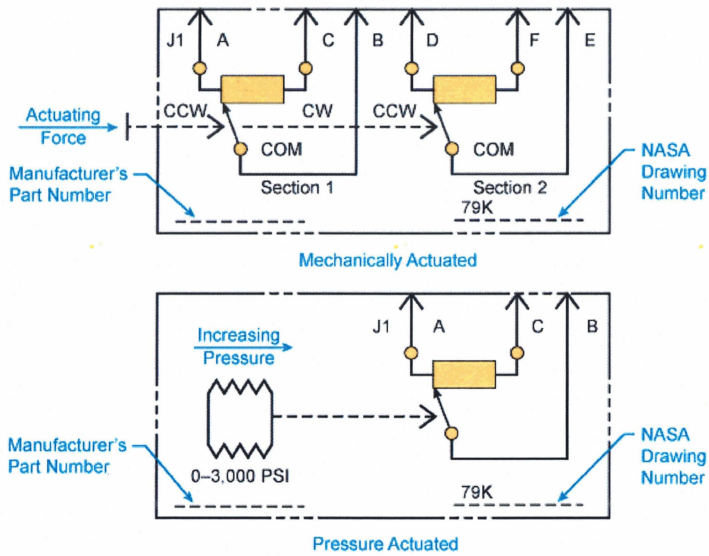

Figure 10. Potentiometer-Type Transducers

4.8 Insulation Resistance

The insulation resistance of complete electrical assemblies, as measured at external mating connector contacts, shall be 20 MΩ minimum, measured at 500 VDC, for all open circuits and from any circuit to the component frame. Components shall be operated, as required, to permit testing of all possible open circuits. If the connector metal is dissimilar to the component metal, insulation shall be as specified in 4.6.3.

4.9 External Markings

Marking symbols and methods shall be in accordance with KSC-STD-152 and KSC-STD-E-0015.

4.9.1 Diagrams

Internal wiring of a component shall be depicted in schematic form on the outer surface of the component by decalcomania, silk screen, stencil, or nameplate. The diagram shall clearly indicate the function of the solenoid coils associated with the proper ports. The diagrams shall conform to applicable schematics shown in this standard and KSC-STD-152.

4.9.2 Connector Designations

The electrical connectors, carrying solenoid circuits, shall be marked with the lower numbered designations beginning with J1. Additional connectors shall be marked J2 and J3, as required, with position-indicating circuits occupying the higher jack numbers.

4.9.3 Other Markings

With the exception of those markings specified herein, other markings, such as mechanical find numbers or electrical reference designations, shall not be shown on the component in order to facilitate interchange of spares and replacements. Such markings may be applied adjacent to the component's assembly designation.

4.10 Testing

Acceptance and qualification testing shall be as specified in the individual item specification, standard, drawing, or other documentation as approved by the responsible design organization.

4.11 Documentation

The vendor's top assembly drawing, representing the complete component, shall carry an internal wiring diagram clearly identifying the device, terminal markings, color coding of wires, (when multicolored wires are used), and the function of the indicator switch with relation to valve actuation or position.

5. QUALITY ASSURANCE PROVISIONS

5.1 Inspectability

The design shall ensure that all equipment, materials, parts, components, end items, systems, and related elements covered by this standard can be inspected and tested adequately to determine conformance to design requirements.

5.2 Integrity Control

The design shall identify the equipment and systems, if any, to be placed under integrity control.

5.3 Inspections and Tests

Special criteria, inspections, verifications, or tests, including special test and inspection methods, required to ensure quality or to fulfill the design intent shall be specified. When not specifically covered elsewhere, the following shall be required:

a. Continuity and insulation resistance (isolation) tests performed in accordance with the requirements of KSC-E-165 and this standard. In the event of ambiguity or conflict between these two documents, this standard shall govern.

b. Voltage drop tests performed as specified in 4.3.6.

c. Soldering inspection performed as specified in KSC-STD-E-0010.

5.4 Contractual Provisions

When this standard is invoked in a contract, the provisions of NPD 1280.1 shall be invoked in the Statement of Work to the extent necessary and appropriate considering the hardware criticality and complexity, state of the art, cost, schedules, and the amount of research and development required. When not covered elsewhere, written procedures describing the methods and equipment to be used for inspections and tests performed under this standard shall be required to be submitted for approval prior to use.

6. PREPARATION FOR DELIVERY

Not applicable.

7. NOTES

7.1 Intended Use

This standard is intended to establish uniform engineering practices and methods for the electrical design or modification of certain mechanical components at KSC.

NOTICE. The Government drawings, specifications, and/or data are prepared for the official use by, or on behalf of, the United States Government. The Government neither warrants these Government drawings, specifications, or other data, nor assumes any responsibility or obligation, for their use for purposes other than the Government project for which they were prepared and/or provided by the Government, or any activity directly related thereto. The fact that the Government may have formulated, furnished, or in any way supplied the said drawings, specifications, or other data is not to be regarded, by implication or otherwise, as licensing in any manner the holder or any other person or corporation nor conveying the right or permission to manufacture, use, or sell any patented invention that may relate thereto.

Custodian:

NASA – John F. Kennedy Space Center
Kennedy Space Center, Florida 32899

Preparing Activity:

John F. Kennedy Space Center
Electrical Design Branch
Electrical Division
Engineering Directorate

STANDARDIZATION DOCUMENT IMPROVEMENT PROPOSAL

INSTRUCTIONS

1. The preparing activity must complete blocks 1, 2, 3, and 8. In block 1, both the document number and revision letter should be given.
2. The submitter of this form must complete blocks 4, 5, 6, and 7.
3. The preparing activity must provide a reply within 30 days from receipt of the form.

NOTE: This form may not be used to request copies of documents, nor to request waivers or clarification of requirements on current contracts. Comments submitted on this form do not constitute or imply authorization to waive any portion of the referenced document or to amend contractual requirements.

I RECOMMEND A CHANGE:	1. DOCUMENT NUMBER KSC-STD-E-0004B	2. DOCUMENT DATE August 12, 2008

3. DOCUMENT TITLE
Pneumatic and Hydraulic Mechanical Components, Electrical Design, Standard for

4. NATURE OF CHANGE *(Identify paragraph number and include proposed rewrite, if possible. Attach extra sheets as needed.)*

5. REASON FOR RECOMMENDATION

6. SUBMITTER

a. NAME *(Last, First, Middle Initial)*	b. ORGANIZATION	
c. ADDRESS *(Include Zip Code)*	d. TELEPHONE *(Include Area Code)*	7. DATE SUBMITTED

8. PREPARING ACTIVITY

a. NAME Electrical Design Branch, Electrical Division' Engineering Directorate	b. ORGANIZATION 321-867-6537

c. ADDRESS *(Include Zip Code)*
Kennedy Space Center, Florida 32899