GP-435
Volume II
REVISION B

ENGINEERING DRAWING PRACTICES

VOLUME II OF II

FACILITIES

Approved By:

Walter T. Murphy
Director of Engineering Development

This Revision Supersedes All Previous
Editions of This Document

March 15, 1993

JOHN F. KENNEDY SPACE CENTER, NASA

RECORD OF REVISIONS/CHANGES

REV LTR	CHANGE NO.	DESCRIPTION	DATE
		Basic Issue	February 1, 1973
	1	Changed pages ii through xiii and 8-1 through 8-10	June 6, 1973
A		General Revision	March 30, 1992
B		Revised to incorporate the metric system	March 15, 1993

TRANSMITTAL SHEET

	DATE
tribution	7/2/99

MATERIAL TRANSMITTED

Change B-3: GP-435, Volume II, Engineering Drawing Practices

Please make the following pen/ink changes to the referenced document:

1. Page 10-1, paragraph 10.2:

   The first sentence now reads "The Document Release Authorization (DRA) form (KSC Form 21-68) shall be used to document ... initial release." It should be changed to read "The Document Release Authorization (DRA) form (KSC Form 21-68) or an electronic controlled release equivalent to the DRA shall be used to document ... initial release."

   The last sentence now reads "The detailed procedure ... in accordance with DE-P 720." It should be changed to read "The detailed procedure ... in accordance with KDP-KSC-P-1537."

2. Page 10-1, paragraph 10.3:

   The first sentence reads "Drawing release by DRA shall apply ... drawings." It should be changed to read, "Drawing release by DRA or an electronic equivalent shall apply ... drawings."

L.L. Schultz
MM-H-A

FILING INSTRUCTIONS

TRANSMITTAL SHEET

stribution	DATE September 11, 1998

MATERIAL TRANSMITTED

1. Change B-2: GP-435, Volume II, Engineering Drawing Practices

Please make the following pen/ink change to the referenced document:

Page 11-4, Paragraph 11.2.1.2 (Block 5) now reads "Enter the exact title of the drawing (not including the subtitle) as it appears on the first sheet." It should be changed to read "Enter the exact title of the drawing (not including the subtitle) as it appears on the first sheet unless the title has been changed by a previous EO. Then enter the exact title as changed by that EO."

Larry L. Schultz
MM-H-A

FILING INSTRUCTIONS

JOHN F. KENNEDY
SPACE CENTER LIBRARY
DOCUMENTS DEPARTMENT
REFERENCE COPY

TRANSMITTAL SHEET

TO	DATE
Distribution	January 17, 1995

MATERIAL TRANSMITTED

Reference: GP-435, Volume II, Engineering Drawing Practices, Revision B, Change 1

Please make the following pen/ink change to referenced document.

Page 1-5

Paragraph 1.4.4.1 Cover Sheet.

Second paragraph, third sentence shall read: The sheet shall also contain the complete title of the National Aeronautics and Space Administration, Kennedy Space Center, Florida. (delete words "and the NASA logo.")

Page 1-6

Figure 1-2. Cover Sheet Example

Delete the logo.

Be advised that neither the NASA logo (worm) referenced in GP-435, nor the NASA insignia (meatball), are to be used on any drawings.

J. E. Potter
J. E. Potter
DF-FSO

FILING INSTRUCTIONS

LIST OF EFFECTIVE PAGES

Insert latest changes, destroy superseded pages

NOTE

The portion of the text affected by the change is indicated by a vertical line in the outer margin of page.

TOTAL NUMBER OF PAGES IN THIS DOCUMENT IS 326, CONSISTING OF:

Page No.	Issue
i thru iii	Original
iv (blank)	Original
v	Original
vi (blank)	Original
vii thru xxi	Original
xxii (blank)	Original
xxiii thru xxv	Original
xxvi (blank)	Original
1-1 thru 1-16	Original
2-1 thru 2-32	Original
3-1 thru 3-5	Original
3-6 (blank)	Original
4-1 thru 4-2	Original
5-1 thru 5-28	Original
6-1 thru 6-23	Original
6-24 (blank)	Original
7-1 thru 7-31	Original
7-32 (blank)	Original
8-1 thru 8-27	Original
8-28 (blank)	Original
9-1 thru 9-110	Original
10-1 thru 10-3	Original
10-4 (blank)	Original
11-1 thru 11-17	Original
11-18 (blank)	Original

FOREWORD

This document establishes the requirements, procedures, and practices for the preparation, release, revision, change, maintenance, and control of engineering drawings prepared for or by the John F. Kennedy Space Center (KSC), NASA. This document applies to those KSC engineering drawings used to fabricate, construct, install, modify, test, operate, maintain, and otherwise utilize ground support equipment (GSE) and facilities at KSC. These requirements, procedures, and practices do not apply to the preparation of illustrations, artwork, or figures in technical publications.

The purpose of this document is to establish uniform engineering practices and methods for the preparation and revision of engineering drawings used at KSC. This document is not intended for use as a text of drafting fundamentals or for the recording of design data or criteria. The figures and drawings shown herein are primarily intended to illustrate the particular drafting practice under consideration and do not illustrate complete working drawings. KSC engineering design practices shall be in accordance with KSC-DE-512-SM and are not included in this document.

Volume I of this manual applies to GSE engineering drawings, and volume II applies to facilities engineering drawings.

Requests for information or for making corrections or additions to this manual should be directed to the Engineering Development Directorate, Mail Code: DE, Kennedy Space Center, Florida 32899. Requests for additional copies of this document should be sent to the Forms Warehouse, Kennedy Space Center, Florida 32899.

TABLE OF CONTENTS

Section	Title	Page
I	INTRODUCTION	1-1
1.1	Scope	1-1
1.2	Drafting Methods	1-1
1.3	Drawing Class	1-2
1.3.1	Nonmaintained Drawings	1-2
1.3.2	Maintained Drawings	1-2
1.4	Facilities Drawing Requirements	1-2
1.4.1	Facility Design Package	1-3
1.4.2	Specifications	1-3
1.4.3	Typical Facility Drawings	1-3
1.4.4	Facility Drawing Set	1-3
1.4.4.1	Cover Sheet	1-5
1.4.4.2	Drawing Index	1-5
1.4.4.3	Vicinity and Location Map	1-5
1.4.4.4	Completion of Drawing Set	1-5
1.5	Measurement Units	1-8
1.6	Applicable Documents	1-8
1.6.1	Governmental	1-8
1.6.1.1	Specifications	1-8
1.6.1.2	Standards	1-9
1.6.1.3	Procedures	1-9
1.6.1.4	Publications	1-9
1.6.2	Non-Governmental	1-10
1.7	Definitions	1-13
II	GENERAL DRAFTING PRACTICES	2-1
2.1	Scope	2-1
2.2	Signatures, Approvals, Dates, and Block Entries	2-1
2.2.1	CAD Drawing	2-1
2.2.2	Revision Blocks	2-1
2.2.3	Title Blocks	2-7
2.3	Parts Identification/Parts List	2-7
2.3.1	Parts Identification	2-7
2.3.2	Parts List	2-7
2.4	Drawing Scale	2-7
2.4.1	Selection of Scale	2-7
2.4.2	Indication of Scale	2-7
2.4.3	Not to Scale	2-11

TABLE OF CONTENTS (cont)

Section	Title	Page
2.5	Dimensioning and Tolerancing	2-11
2.6	Dual Dimensioning	2-11
2.7	Metric Values	2-11
2.8	Screw Threads	2-14
2.9	Mechanical Springs	2-14
2.10	Gears	2-14
2.11	Forgings	2-14
2.12	Welding Practices	2-14
2.13	Abbreviations	2-14
2.14	Graphic Symbols	2-14
2.15	Surface Texture	2-14
2.16	Computer-Aided Design (CAD) Drawings	2-15
2.17	CAD Line Variance	2-15
2.18	Multiviews and Sectional Views	2-16
2.19	Section, Detail, and View Identification	2-16
2.19.1	Ball Callouts	2-16
2.19.1.1	Two-Part Ball Callout	2-16
2.19.1.2	Three-Part Ball Callout	2-16
2.19.2	Lettering	2-19
2.19.3	Arrows	2-19
2.20	Legibility and Reproducibility	2-20
2.20.1	Lines	2-20
2.20.1.1	Line Quality	2-20
2.20.1.2	Line Width	2-20
2.20.1.3	Line Spacing	2-20
2.20.2	Lettering	2-20
2.20.2.1	Typewritten Lettering	2-20
2.20.2.2	Preprinted Lettering	2-20
2.20.3	Signatures and Dates	2-20
2.20.4	Symbols	2-20
2.20.5	Cross-Section Areas	2-25
2.21	Drawing Notes	2-25
2.21.1	Drawing Note Types	2-25
2.21.1.1	General Notes	2-25
2.21.1.2	Specific Notes	2-26
2.21.1.3	Flag Notes	2-26
2.21.2	Note Language Style	2-27
2.21.2.1	Commonly Used Words and Phrases	2-27
2.21.2.2	Use of "Shall," "Will," "Should," and "May"	2-27
2.21.2.3	Indefinite Terms	2-27

TABLE OF CONTENTS (cont)

Section	Title	Page
2.21.3	Note Contents	2-28
2.21.4	Material Notes	2-30
2.22	Column Grid System	2-30
2.23	Reference Dimensions and Notes	2-30
2.24	Drawing Checking	2-31
2.24.1	Quality	2-31
2.24.2	Title Blocks	2-31
2.24.3	Drawing Practices	2-32
2.24.4	Revisions	2-32
III	DRAWING FORMAT	3-1
3.1	Size, Format, Title Block, and Material	3-1
3.2	Preferred Formats	3-1
3.2.1	Zoning of Drawings	3-1
3.2.2	Microfilming Alignment Arrowheads	3-3
3.3	Security Classification and Notation	3-3
3.4	Notice	3-3
3.5	KSC Contractor Drawing Formats	3-3
3.6	Drawing Format Materials	3-3
3.7	Computer-Generated Drawing Formats and Materials	3-3
3.8	Metric-Size Paper	3-5
IV	DRAWING TITLES AND IDENTIFICATION	4-1
4.1	Scope	4-1
4.2	Title Requirements	4-1
4.2.1	Location	4-1
4.2.2	Basic Name	4-1
4.2.3	Description	4-1
4.2.4	Subtitle	4-1
4.3	Identification Requirements	4-1
4.3.1	Drawing Number	4-1
4.3.2	Records	4-2
4.3.3	Transferring Design Responsibility to Another Organization	4-2
V	CIVIL DRAWINGS	5-1
5.1	Scope	5-1
5.2	Definition of Civil Drawings	5-1

TABLE OF CONTENTS (cont)

Section	Title	Page
5.3	Types of Civil Drawings	5-1
5.4	Preliminary Field Investigation and Study Drawing	5-2
5.4.1	Definition	5-2
5.4.2	Requirements	5-2
5.5	Topographic Map	5-5
5.5.1	Definition	5-5
5.5.2	Requirements	5-5
5.6	Master Plan Drawing	5-7
5.6.1	Definition	5-7
5.6.2	Requirements	5-7
5.7	Plot or Site Plan Drawing	5-7
5.7.1	Definition	5-7
5.7.2	Requirements	5-10
5.8	Excavation Plan Drawing	5-10
5.8.1	Definition	5-10
5.8.2	Requirements	5-12
5.9	Finish-Grading Drawing	5-12
5.9.1	Definition	5-12
5.9.2	Requirements	5-14
5.10	Plan and Profile Drawing	5-14
5.10.1	Definition	5-14
5.10.2	Requirements	5-16
5.10.2.1	Plan With Profile at Grade	5-17
5.10.2.2	Plan With Profile Above Grade	5-19
5.10.2.3	Plan With Profile Below Grade	5-19
5.11	Road and Paving Drawing	5-22
5.11.1	Definition	5-22
5.11.2	Requirements	5-22
5.12	Symbols for Civil Drawings	5-24
VI	ARCHITECTURAL DRAWINGS	6-1
6.1	Scope	6-1
6.2	Definition of Architectural Drawings	6-1
6.3	Types of Architectural Drawings	6-1
6.4	Preliminary Study Drawing	6-1
6.4.1	Definition	6-1
6.4.2	Requirements	6-3
6.5	Presentation Drawing	6-3
6.5.1	Definition	6-3

TABLE OF CONTENTS (cont)

Section	Title	Page
6.5.2	Requirements	6-3
6.6	Pictorial Drawing	6-3
6.6.1	Definition	6-3
6.6.2	Requirements	6-3
6.7	Architectural Working Drawings	6-6
6.7.1	Floor Plans	6-6
6.7.1.1	Definition	6-6
6.7.1.2	Requirements	6-6
6.7.2	Elevations	6-8
6.7.2.1	Definition	6-8
6.7.2.2	Requirements	6-8
6.7.3	Sections	6-10
6.7.3.1	Definition	6-10
6.7.3.2	Requirements	6-10
6.7.4	Details	6-12
6.7.4.1	Definition	6-12
6.7.4.2	Requirements	6-12
6.7.5	Roof Plan	6-12
6.7.5.1	Definition	6-12
6.7.5.2	Requirements	6-12
6.7.6	Reflected Ceiling Plan	6-12
6.7.6.1	Definition	6-12
6.7.6.2	Requirements	6-16
6.7.7	Schedules	6-16
6.7.7.1	Definition	6-16
6.7.7.2	Requirements	6-16
6.7.7.2.1	Door Schedule	6-16
6.7.7.2.2	Window Schedule	6-16
6.7.7.2.3	Room Finish Schedule	6-18
6.7.8	Miscellaneous Delineations	6-18
6.8	Architectural Symbols	6-18
VII	STRUCTURAL DRAWINGS	7-1
7.1	Scope	7-1
7.2	Definition of Structural Drawings	7-1
7.3	Structural Concrete Drawings	7-2
7.3.1	Definition	7-2
7.3.2	Foundation Drawing	7-2
7.3.2.1	Definition	7-2

TABLE OF CONTENTS (cont)

Section	Title	Page
7.3.2.2	Requirements	7-2
7.3.3	Floor Plan	7-7
7.3.3.1	Definition	7-7
7.3.3.2	Requirements	7-7
7.3.4	Elevation	7-9
7.3.4.1	Definition	7-9
7.3.4.2	Requirements	7-9
7.3.5	General Detail Drafting Practices	7-11
7.4	Structural Steel Drawings	7-13
7.4.1	Definition	7-13
7.4.2	Requirements	7-13
7.4.3	Column Grid	7-13
7.4.3.1	Definition	7-13
7.4.3.2	Requirements	7-13
7.4.4	Structural Steel Plan	7-16
7.4.4.1	Definition	7-16
7.4.4.2	Requirements	7-16
7.4.5	Framing Section or Elevation	7-18
7.4.5.1	Definition	7-18
7.4.5.2	Requirements	7-18
7.4.6	Connections and Details	7-24
7.4.6.1	Definition	7-24
7.4.6.2	Requirements	7-24
7.5	Symbols for Structural Drawings	7-24
7.5.1	Symbols for General Use	7-27
7.5.2	Reinforced Concrete Construction Symbols	7-27
7.5.3	Symbols for Rolled Shapes	7-28
7.5.4	Symbols for Combinations of Structural Shapes	7-28
7.5.5	Timber Construction Symbols	7-28
7.5.6	Flat-Rolled Metals - Thickness Callouts	7-28
VIII	MECHANICAL DRAWINGS	8-1
8.1	Scope	8-1
8.2	Definition of Mechanical Drawings	8-1
8.3	Flow Diagram	8-1
8.3.1	Definition	8-1
8.3.2	Requirements	8-1
8.3.3	Instrument Diagram	8-3
8.3.3.1	Definition	8-3

TABLE OF CONTENTS (cont)

Section	Title	Page
8.3.3.2	Requirements	8-3
8.4	Piping Drawing	8-7
8.4.1	Definition	8-7
8.4.2	Requirements	8-7
8.5	Heating, Ventilating, and Air-Conditioning Drawing	8-13
8.5.1	Definition	8-13
8.5.2	Requirements	8-13
8.6	Facilities Equipment Drawings	8-19
8.6.1	Facilities Mechanical Equipment Construction Drawing	8-22
8.6.1.1	Definition	8-22
8.6.1.2	Requirements	8-22
8.6.2	Facilities Mechanical Equipment Modification Drawing	8-22
8.6.2.1	Definition	8-22
8.6.2.2	Requirements	8-22
8.6.3	Facilities Equipment Installation Drawing	8-22
8.6.3.1	Definition	8-22
8.6.3.2	Requirements	8-22
8.7	Symbols for Mechanical Drawings	8-26
IX	ELECTRICAL DRAWINGS	9-1
9.1	Scope	9-1
9.2	Definition of Electrical Drawings	9-1
9.3	Electrical Drawing Types	9-1
9.4	General Requirements	9-2
9.5	Diagrams	9-2
9.5.1	Definition	9-2
9.5.2	General Requirements	9-3
9.5.3	Block Diagram	9-5
9.5.3.1	Definition	9-5
9.5.3.2	Requirements	9-5
9.5.4	Single-Line Diagram	9-8
9.5.4.1	Definition	9-8
9.5.4.2	Requirements	9-11
9.5.5	Schematic Diagram	9-18
9.5.5.1	Definition	9-18
9.5.5.2	Requirements	9-19
9.5.6	Connection Diagram	9-32
9.5.6.1	Definition	9-32
9.5.6.2	General Requirements	9-32

TABLE OF CONTENTS (cont)

Section	Title	Page
9.5.6.2.1	Requirements for Line-Type Connection Diagrams	9-38
9.5.6.2.2	Requirements for Lineless-Type Connection Diagrams	9-41
9.6	Electrical Plans	9-45
9.6.1	Definition	9-45
9.6.2	General Requirements	9-48
9.6.3	Electrical-Equipment Arrangement	9-54
9.6.3.1	Definition	9-54
9.6.3.2	Requirements	9-54
9.6.4	Building Load-Center Substation	9-54
9.6.4.1	Definition	9-54
9.6.4.2	Requirements	9-54
9.6.5	Building or Structural Electrical-Power Distribution (Interior)	9-56
9.6.5.1	Definition	9-56
9.6.5.2	Requirements	9-56
9.6.6	Exterior Power Distribution	9-56
9.6.6.1	Definition	9-56
9.6.6.2	Requirements	9-56
9.6.7	Building or Structure Lighting (Interior)	9-59
9.6.7.1	Definition	9-59
9.6.7.2	Requirements	9-59
9.6.8	Exterior Lighting	9-61
9.6.8.1	Definition	9-61
9.6.8.2	Requirements	9-61
9.6.9	Building or Structure Grounding (Interior)	9-63
9.6.9.1	Definition	9-63
9.6.9.2	Requirements	9-63
9.6.10	Exterior Grounding	9-63
9.6.10.1	Definition	9-63
9.6.10.2	Requirements	9-66
9.6.11	Cathodic Protection	9-66
9.6.11.1	Definition	9-66
9.6.11.2	Requirements	9-66
9.6.12	Building or Structure Communications	9-68
9.6.12.1	Definition	9-68
9.6.12.2	Requirements	9-68
9.6.13	Exterior Communications	9-70
9.6.13.1	Definition	9-70
9.6.13.2	Requirements	9-70
9.6.14	Fire Alarm Riser Diagram	9-70
9.6.14.1	Definition	9-70

TABLE OF CONTENTS (cont)

Section	Title	Page
9.6.14.2	Requirements	9-70
9.7	Functional Designations	9-73
9.7.1	Definitions	9-73
9.7.1.1	General	9-73
9.7.1.2	Switchgear Designations	9-73
9.7.1.3	Control-Device Designations	9-73
9.7.2	Requirements	9-73
9.7.2.1	General	9-73
9.7.2.2	Switchgear Designations	9-73
9.7.2.2.1	Supervisory Control and Indication	9-83
9.7.2.2.2	Suffix Letters	9-83
9.7.2.2.3	Suffix Numbers	9-94
9.7.2.2.4	Devices Performing More Than One Function	9-96
9.7.2.2.5	Representation of Device Contacts on Electrical Diagrams	9-96
9.7.2.3	Control-Device Designations	9-96
9.7.2.3.1	Miscellaneous Designations	9-105
9.7.2.3.2	Prefix Numbers	9-110
X	DRAWING RELEASE AND CONTROL	10-1
10.1	Scope	10-1
10.2	Document Release Authorization Form	10-1
10.3	Drawing Release Application	10-1
10.4	Preliminary Release	10-1
10.5	Preliminary Release Marking	10-2
10.6	Final Release	10-2
10.7	Drawing Revision/Change Release	10-2
10.8	Release Records	10-2
10.9	Drawing Control	10-2
10.10	Duplicate Originals	10-2
10.11	Drawing Record	10-3
XI	DRAWING CHANGES AND REVISIONS	11-1
11.1	Scope	11-1
11.2	Change Methods	11-1
11.2.1	Changes By EO	11-1
11.2.1.1	EO Format	11-1
11.2.1.2	Preparation of the Engineering Order (KSC Form 21-34)	11-1

TABLE OF CONTENTS (cont)

Section	Title	Page
11.2.1.3	Preparation of the Engineering Order Continuation Sheet (KSC Form 21-34A)	11-8
11.3	Revision Methods	11-8
11.3.1	Revision Drawing Practices	11-8
11.3.2	Change in Dimensions	11-8
11.4	Recording Revisions on Drawings	11-8
11.4.1	Zone	11-10
11.4.2	Revision Letter	11-10
11.4.3	Description	11-10
11.4.4	Revision Date	11-10
11.4.5	Approval	11-10
11.4.6	Separating Revisions	11-10
11.4.7	Revision Erasure	11-10
11.5	Revision Identification	11-10
11.5.1	Revision Letters	11-10
11.5.2	Revision Symbols	11-11
11.6	Revision of Multiple-Sheet Drawings	11-11
11.6.1	Adding Sheets	11-11
11.6.1.1	Inserting New Sheets	11-11
11.6.1.2	Adding Sheets to the End	11-13
11.6.1.3	Inserting New Sheets and Renumbering	11-13
11.6.2	Deleting Sheets	11-15
11.6.3	Rearranging Sheets	11-15
11.7	Cancelled Drawings	11-16
11.8	Obsolete Drawings	11-16
11.9	Redrawn Drawings	11-16
11.10	Reinstating a Cancelled/Obsolete Drawing	11-16
11.11	Documentation Files	11-17

LIST OF ILLUSTRATIONS

Figure	Title	Page
1-1	Typical Drawing Set	1-4
1-2	Cover Sheet Example	1-6
1-3	Vicinity and Location Map	1-7
2-1	Revision Block Entries on A-Size Drawings on KSC Form 21-2C	2-2
2-2	Title/Revision Block Entries on A-Size Drawings on KSC Form 1-7 and on Drawings Larger Than A-Size	2-3
2-3	Title Block Entries on a Facilities A&E Drawing	2-5
2-4	Title Block Entries on A-Size Drawings on KSC Form 21-2C	2-8
2-5	Simplified Parts List Format	2-9
2-6	Simplified Parts List Format for Use When Parts or Quantity Takeoff is to be Performed by the Contractor	2-9
2-7	Forms of Graphic Scales	2-10
2-8	Position Method	2-12
2-9	Bracket Method	2-13
2-10	Examples of Section, Detail, and View Identifications	2-17
2-11	Examples of Section, Detail, or View Callouts Used in Multiple Places	2-18
2-12	Two-Part and Three-Part Callouts	2-18
2-13	Section, Detail, or View Callout Lettering	2-19
2-14	Example of Arrows Used in Section, Detail, or View Identifications	2-19
2-15	Line Standards	2-21
2-16	Examples of Hand-Lettered Characters	2-23
2-17	Format for List of General Notes	2-25
2-18	Format for List of Specific Notes	2-26
2-19	Flag Note Size	2-26
3-1	Drawing Zones	3-2
3-2	Alignment Arrowheads	3-4
4-1	Typical Facilities Drawing Title	4-2
5-1	Preliminary Field Investigation and Study Drawing	5-3
5-2	Typical Core Boring Log	5-4
5-3	Topographic Map	5-6
5-4	Master Plan	5-8
5-5	Plot or Site Plan Drawing	5-9
5-6	Excavation Plan	5-11
5-7	Finish-Grading Drawing	5-13
5-8	Plan and Profile Drawing	5-15
5-9	Plan With Profile At Grade	5-18
5-10	Plan With Profile Above Grade	5-20
5-11	Plan With Profile Below Grade	5-21
5-12	Road and Paving Drawing	5-23

LIST OF ILLUSTRATIONS (cont)

Figure	Title	Page
6-1	Preliminary Study Drawing	6-2
6-2	Presentation Drawing	6-4
6-3	Pictorial Drawing	6-5
6-4	Floor Plan	6-7
6-5	Elevations	6-9
6-6	Section Drawing	6-11
6-7	Detail Drawing	6-13
6-8	Roof Plan	6-14
6-9	Reflected Ceiling Plan	6-15
6-10	Door Schedule	6-17
6-11	Room Finish Schedule	6-18
6-12	Miscellaneous Wall Sections	6-19
7-1	Structural Concrete Plan, Elevation, and Section	7-3
7-2	Foundation Plan and Details	7-4
7-3	Footing and Column Information	7-6
7-4	Structural Concrete Floor Plan	7-8
7-5	Floor Elevation and Section	7-10
7-6	Typical Steel-Supported Slabs	7-12
7-7	Structural Steel Drawing	7-14
7-8	Typical Framing Plan	7-17
7-9	Bent-Plate Details	7-19
7-10	Base-Plate Details and Schedule	7-20
7-11	Example of Modified Shape Dimensioned	7-21
7-12	Elevation	7-22
7-13	Examples of Coped, Blocked, and Cut Beams	7-25
7-14	Miscellaneous Structural Details	7-26
8-1	Mechanical Flow Diagram	8-2
8-2	Flow Diagram	8-4
8-3	New/Existing Lines	8-5
8-4	Instrument Diagram	8-6
8-5	Example of Piping Drawing	8-8
8-6	Dimensioning of Wall-Supported Pipes	8-11
8-7	Dimensioning of Overhead-Supported Pipes	8-11
8-8	Method of Showing Pipe Elevations	8-12
8-9	Normal Use of Line Nomenclature	8-14
8-10	Grouping of Line Designations	8-14
8-11	Isometric View of Piping	8-15
8-12	Use of Detail Numbers for Support Hardware	8-16
8-13	Example of a Heating, Ventilation, and Air-Conditioning Drawing	-17
8-14	Ductwork Details	8-18

LIST OF ILLUSTRATIONS (cont)

Figure	Title	Page
8-15	Example of Duct Size Dimensioning and Flow-Direction Arrows	8-20
8-16	Typical Schedules	8-21
8-17	Mechanical Equipment Construction Drawing	8-23
8-18	Facilities Equipment Modification Drawing	8-24
8-19	Facilities Equipment Installation	8-25
8-20	Typical Air-Conditioning Schedule	8-27
9-1	Grouping of Leads	9-6
9-2	Block Diagram Arrangements	9-6
9-3	Identifying Nomenclature	9-7
9-4	Labeling of Connection Lines	9-7
9-5	Circuit Flow	9-9
9-6	Use of Dashed Lines to Show Optional Items	9-9
9-7	Dash Line Overlays for Additional Orientation	9-9
9-8	Typical Block Diagram	9-10
9-9	Single-Line Diagram	9-12
9-10	Comparison of Single-Line and Schematic Diagrams	9-12
9-11	Arrangement of Single-Line Diagrams	9-13
9-12	Single-Line Diagram (Functional)	9-13
9-13	Transformer Voltage Representation	9-15
9-14	Current Transformer Ratio	9-15
9-15	Pertinent Rating Information on Single-Line Diagrams	9-15
9-16	Appropriate Information Shown on Single-Line Diagrams	9-15
9-17	Transformer Information	9-16
9-18	Winding Connection Symbols	9-16
9-19	Polarity Markings for Transformers	9-16
9-20	Device Quantity for Transformers	9-17
9-21	Device Quantity Use	9-17
9-22	Example of a Device List	9-17
9-23	Typical Schematic Diagram	9-18
9-24	Circuit Arrangements	9-20
9-25	Preferred Placement of Functional Designations	9-20
9-26	Numerical Value Preferred Locations	9-22
9-27	Identification of Interrupted Lines	9-22
9-28	Typical Arrangement of Line Identifications and Destinations	9-23
9-29	Interrupted Line Interconnected by Dashed Lines	9-23
9-30	Position-Function Relationships for Rotary Switches (Optional)	9-23
9-31	Position-Function Relationships for Rotary Switches (Tabular)	9-25
9-32	Typical Development of a Graphic Symbol - Complex Rotary Switches	9-25
9-33	Use of Part of Prefix	9-26

LIST OF ILLUSTRATIONS (cont)

Figure	Title	Page
9-34	Identification of Individual Terminals	9-26
9-35	Transmission Path Recognition Symbol	9-27
9-36	Test Circuit Relationship	9-27
9-37	Terminal Identification Example - Rotary Switch	9-29
9-38	Terminal Identification Example - Key Switch	9-29
9-39	Terminal Identification	9-30
9-40	Terminal Identification - Adjustable Resistor	9-30
9-41	Coaxial Cable and Connector - Single-Line Representation	9-31
9-42	Coaxial Cable and Connector - Complete Representation	9-31
9-43	Identification of Integral Elements by Suffix Letters	9-31
9-44	Typical Point-to-Point Line-Type Connection Diagram	9-33
9-45	Typical Highway Line-Type Connection Diagram	9-34
9-46	Lineless-Type Diagram	9-35
9-47	Connection Lines Between Components	9-38
9-48	Method of Indicating Feed Lines on a Highway Connection Diagram	9-40
9-49	Simplified Wiring Delineation	9-42
9-50	Interrupted Line Identification	9-42
9-51	Destinations Using Designations and Dash Numbers for Terminal Identification	9-43
9-52	Location of Wire Size and Type Identification	9-43
9-53	Indication of Wire Color	9-43
9-54	Use of Zone Orientation	9-44
9-55	Typical "From-To" Cable Connection Diagram Listing	9-46
9-56	Typical Wire and Conduit Schedule	9-51
9-57	Typical Tabular Description	9-51
9-58	Typical Lighting Panel Schedules	9-52
9-59	Typical Power Panel Schedules	9-53
9-60	Electrical Substation	9-55
9-61	Building or Structure Interior Electrical-Power Distribution Plan	9-57
9-62	Exterior Power Distribution	9-58
9-63	Interior Lighting Plan and Schedule	9-60
9-64	Exterior Lighting Plan	9-62
9-65	Interior Grounding Plan	9-64
9-66	Exterior Grounding Plan	9-65
9-67	Cathodic Protection	9-67
9-68	Example of a Building or Structure Communications Plan	9-69
9-69	Exterior Communications Plan	9-71
9-70	Example of a Fire Alarm Riser Diagram	9-72

LIST OF ILLUSTRATIONS (cont)

Figure	Title	Page
9-71	Method of Designating Position Switches for a Valve	9-90
9-72	Method of Designating Position Switches for a Fuel Transfer Switch	9-92
9-73	Typical Example of Suffix-Letter Designations	9-95
9-74	Example of Control Device Designations	9-98
11-1	Engineering Order (KSC Form 21-34)	11-2
11-2	Engineering Order Continuation Sheet (KSC Form 21-34A)	11-3
11-3	Examples of Typical Revision Recordings	11-9
11-4	Revision Symbol	11-11
11-5	Revision Status	11-12
11-6	Insertion of a New Sheet	11-14
11-7	New Sheet Added to End of Drawing	11-14
11-8	Insertion of a New Sheet With the Drawing Renumbered	11-15

LIST OF TABLES

Table	Title	Page
2-1	Minimum Letter and Number Sizes on KSC Facilities Drawings	2-22
3-1	Drawing Format List	3-1
3-2	Comparison of International and U.S. Customary Drawing Sizes	3-5
5-1	Basic Symbols for Civil Drawings	5-24
6-1	Symbols for Common Types of Construction	6-21
6-2	Symbols for Common Construction Materials	6-23
7-1	Abbreviations and Symbols for Hot-Rolled Structural Steel Shape Designations	7-29
9-1	Information Required for a Wire List	9-47
9-2	Standard Reference Positions of Typical Devices	9-89

ABBREVIATIONS AND ACRONYMS

A	amperes
A&E	architect and engineer
AA	Aluminum Association
AC, ac	alternating current
ACI	American Concrete Institute
AIIM	Association for Information and Image Management
AISC	American Institute of Steel Construction
AITC	American Institute of Timber Construction
ANSI	American National Standards Institute
ASHRAE	American Society of Heating, Refrigeration and Air Conditioning Engineers
ASSY	assembly
ASTM	American Society for Testing and Materials
AWG	American Wire Gage
AWS	American Welding Society
BB	beam bolster
BLK	black
BLU	blue
BOT	bottom
BRN	brown
BS	beam space
CAD	computer-aided design
CAGE	Commercial and Government Entity
CB	circuit breaker
CCBD	Configuration Control Board Directive
CDR	critical design review
CHC	continuous high chair
cont	continued
CW	clockwise
DC, dc	direct current
DE	Engineering Development Directorate
DEG	degrees
DIR	designation for direct wiring
DOD	Department of Defense
DRA	Document Release Authorization
DWG	drawing
DXF	designation for drawing interchange file
EF	each face
e.g.	for example
EL, ELEV	elevation
EO	engineering order
ESR	Engineering Support Request
etc.	and so forth

ABBREVIATIONS AND ACRONYMS (cont)

GRN	green
GFE	Government furnished equipment
GSE	ground support equipment
GRY	gray
H	henry
HBB	heavy beam bolster
HBS	heavy beam spacer
HC	high chair
HOR	horizontal
i.e.	that is
IGES	Initial Graphics Exchange Specification
INC	incorporated
JC	joist chair
k	kilo (1,000)
KSC	John F. Kennedy Space Center
kV	kilovolt
kVA	kilovoltampere
kW	kilowatt
LC	designation of latch-checking switch
LC-39	Launch Complex 39
lg	long
LS	designation of limit switch
m	meter
MATL	material
MFR	manufacturer's
mH	millihenry
MIL	military
MIN	minutes
mm	millimeter
NASA	National Aeronautics and Space Administration
NEC	National Electrical Code
NO.	number
NTS	not to scale
OMD	operation and maintenance documentation
OMS	orbital maneuvering subsystem
OPNG	opening
ORN	orange
PC	point of curvature
PCN	project control number
PDR	preliminary design review
pF	picofarad
PGT	designation for pigtail lead
PI	point of intersection

ABBREVIATIONS AND ACRONYMS (cont)

PR	Problem Report , purple
PROJ	project
PSIG	pounds per square inch gage
PT	point of tangency
QTY	quantity
RE	remote
REF	reference
REQD	required
REV	revision
SAE	Society of Automotive Engineers
SB	slab bolster
SH	sheet
SI	International System of Units
SL	slate
SPEC	specification
SPECSINTACT	specifications kept intact
SS	slab spacer
STA	station
SUB	subtract
SUR	designation for surface wiring
SYM.	symbol
TDRS	Tracking and Data Relay Satellite
UL	Underwriter Laboratories
UNS	unified numbering system
V	volts
VERT	vertical
VIO	violet
VPF	Vertical Processing Facility
WHT	white
WT.	weight
YEL	yellow
µF	microfarad
µH	microhenry

SECTION I

INTRODUCTION

1.1 SCOPE

This manual establishes the requirements, procedures, and practices for the preparation, release, revision, modification, maintenance, and control of engineering drawings prepared for or by the John F. Kennedy Space Center (KSC), NASA. Volume I of this manual applies to those drawings used to fabricate, construct, install, test, operate, maintain, and otherwise utilize ground support equipment (GSE) at KSC. Volume II applies to drawings used to construct, test, operate, maintain, and otherwise utilize facilities at KSC. These requirements do not apply to the preparation of illustrations, artwork, or figures in technical publications. KSC engineering design practices shall be in accordance with KSC-DE-512-SM and are not included in this document.

To establish uniform engineering practices and methods for the preparation and revision of facilities engineering drawings used at KSC, volume II provides:

a. Drafting practices including civil, architectural, structural, mechanical, and electrical conventions

b. Drawing formats

c. Types of facilities engineering drawings

d. Procedures for the creation of titles for facilities drawings

e. Methods for revision and change of facilities drawings

f. Procedures for numbering and identification of facilities drawings

1.2 DRAFTING METHODS

The requirements, procedures, and practices specified herein shall be followed in preparation of drawings by both manual and computer-aided design (CAD) drafting methods. Selection of the appropriate drafting method to be used shall be made by the responsible design organization. CAD hardware and software may be used to prepare drawing layouts, details, and formats.

1.3 DRAWING CLASS

The class of a drawing shall be determined by the responsible design organization, based upon the purpose and intent of the drawing and upon operational requirements.

1.3.1 NONMAINTAINED DRAWINGS. Nonmaintained drawings are prepared for defining design criteria, performing studies, design evaluation, initial construction, fabrication or modification, installation, and qualification and acceptance testing of facilities, systems, and equipment. Upon completion of fabrication, installation, construction, or modification, nonmaintained drawings may be revised to document the as-built configuration and may be revised to maintain the configuration. Engineering Orders (EO's) may be issued to change nonmaintained drawings when it is more cost effective to change a drawing than to produce a modification drawing.

1.3.2 MAINTAINED DRAWINGS. Maintained drawings are prepared to document facility, system, and equipment hardware and software configurations. Maintained drawings shall be kept up to date through revisions and the issuance of EO's to the drawings. Maintained drawings include operations and maintenance documentation (OMD).

1.4 FACILITIES DRAWING REQUIREMENTS

Facilities drawings shall define all of the elements of a facility design, including materials, services, equipment utilities, and other engineering features. The number of sheets in a facilities drawing will vary according to the scope and requirements of the project. The sheets shall be divided into specific engineering and construction disciplines.

Preliminary study drawings (i.e., design criteria/requirements drawings or preliminary engineering report drawings) shall define the concept of the facility and the general requirements in regard to size, location, and features, and shall define the proposed civil, architectural, structural, mechanical, and electrical requirements. Maps and site layout drawings shall be prepared to ensure the feasibility of construction on the proposed site.

Facility design requirements shall be defined on the following types of drawings:

a. Civil drawings that show the location and development of the site.

b. Architectural drawings that show floor plans, elevations, sections, and details of the structure

c. Structural drawings that show all structural steel, reinforced concrete, or special structures

d. Mechanical drawings that show the arrangement of mechanical systems such as heating, air conditioning, ventilation, plumbing, and process piping.

e. Electrical drawings that show the necessary details for the installation of power, lighting, communications, and control equipment.

1.4.1 FACILITY DESIGN PACKAGE. The facility design package shall contain the construction specification and the facility drawings. Duplication of information in the specifications and drawings shall be avoided. In case of conflict between the specifications and the drawings, the specification shall govern. Other technical documentation may also be included in the design package. A design data manual, a construction schedule, a cost estimate, a Government-furnished equipment (GFE) list, and a long-lead procurement list are examples of other technical documentation that may be required to ensure successful completion of construction.

1.4.2 SPECIFICATIONS. Specifications shall be engineering documents, intended primarily for use in procurement and construction, that give clear, accurate descriptions of technical requirements for items, materials, utilities, and services, including the procedures by which it will be determined that the design requirements of the facility have been met. In cases where the specification has been updated, the current specification in effect shall be used.

The construction specification shall contain the scope of work, references to applicable codes, construction practices, installation requirements, workmanship, guides for the purchase of construction materials, certain construction testing, and general design requirements that can be covered in the specification rather than by the use of repeated callouts on numerous drawings. The NASA SPECSINTACT system shall be used for all construction specifications associated with facilities drawings.

1.4.3 TYPICAL FACILITY DRAWINGS. The drawings for a facility shall be prepared to delineate the work of a single contractor or subcontractor, such as the work required for the forming, reinforcement, and pouring of a reinforced-concrete floor. Other drawings are required for in-floor installation of associated components such as conduit and boxes for lighting and miscellaneous electrical outlets, and for setting sleeves for pipe penetrations. Accordingly, the drawings prepared for the various craft work are supplementary to each other and are assembled in functional sections to meet the conditions under which they are to be used.

In general, the number of drawings for a facility shall be kept to a minimum. This effects savings in drafting and in field issue, particularly when the number of copies issued is quite large. Drawings shall be combined wherever possible, provided clarity is not compromised. On drawings for a small facility, it may be possible to incorporate several of the functional sections on one drawing sheet.

1.4.4 FACILITY DRAWING SET. Facility drawings are usually bound in a set prior to release for bidding or other purposes. The first sheet in the set is the cover sheet, followed by the vicinity map and drawing index. Prints of civil, architectural, structural, mechanical, and electrical drawings are added to complete the set. (See figure 1-1.)

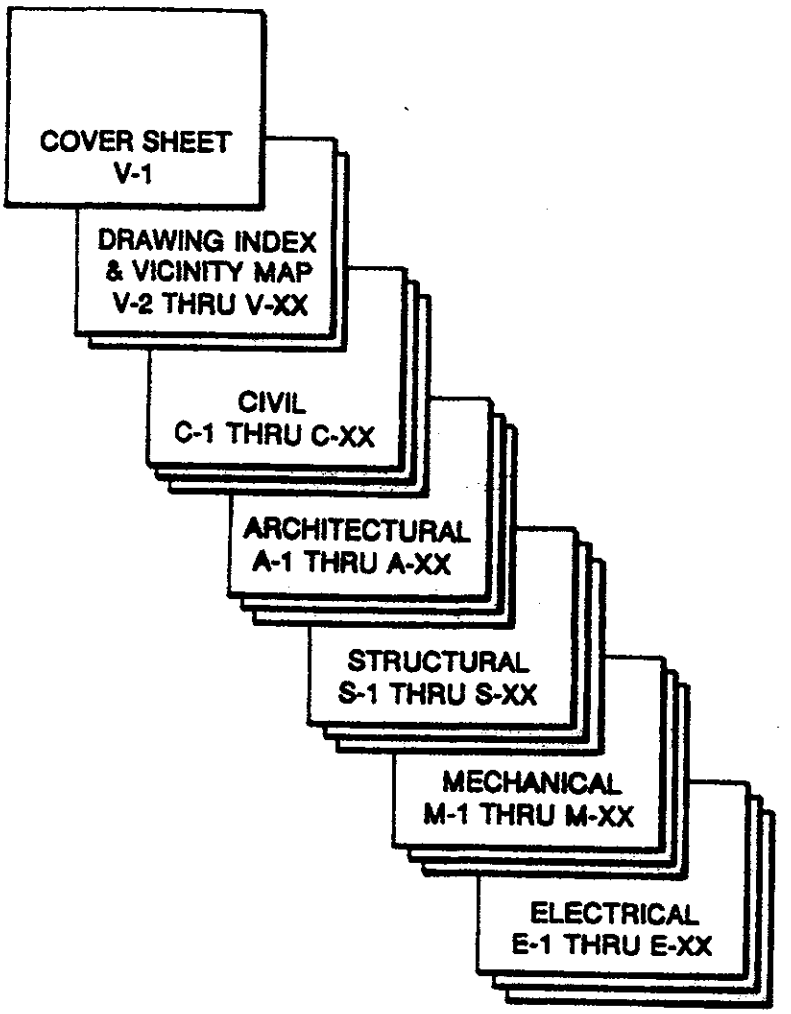

Figure 1-1. Typical Drawing Set

1.4.4.1 Cover Sheet. The cover sheet shall normally be the first sheet of the drawing set and shall contain the official project identification nomenclature. However, small projects may not require a cover sheet.

The cover sheet shall be the standard drawing format with a title block for the required approval signatures. The top of the cover sheet shall contain the official project title. The sheet shall also contain the complete title of the National Aeronautics and Space Administration, Kennedy Space Center, Florida and the NASA logo. (See figure 1-2.) Other data such as a reference to the technical specifications, the date of the drawing, the drawing index, the vicinity map, or total number of sheets in the drawing may be prominently displayed when appropriate.

1.4.4.2 Drawing Index. A drawing index is a listing of each drawing sheet to be included in the drawing set. Information entered in the drawing index shall include sheet number, revision status, functional code, and sheet title.

1.4.4.3 Vicinity and Location Map. A vicinity and location map drawing delineates the geographical relationship of a particular site to the identifiable features of the surrounding areas by incorporating symbols, conventions, and notes in describing the location of the facilities in relation to state and county boundaries, adjacent cities, towns, highways, railroads, airports, bodies of water, etc. (See figure 1-3.)

The following requirements shall apply to the preparation of a vicinity and location map drawing:

a. A scale appropriate to delineate the requirements shall be used. A graphic scale shall be included on the drawing.

b. A symbolic representation of the site in the form of a darkened circle or outline approximately the site configuration shall be shown with respect to state and county boundaries, adjacent cities, highways, railroads, airports, rivers, etc.

c. Highways shall be indicated by route numbers and cities, railroads, airports, rivers, and other significant features clearly identified, as required.

d. North arrow for orientation shall be shown with a simple and effective representation.

e. Mileages to major cities or other points of interest may be given.

The vicinity map and drawing index may be combined on one drawing when appropriate. The index and/or vicinity map may also be incorporated into the cover sheet when appropriate.

1.4.4.4 Completion of Drawing Set. The drawing set is completed by adding the civil, architectural, structural, mechanical, and electrical drawings, in that order, to the set and by

ML PARK SITE NO. 3
UTILITIES MODIFICATIONS

NASA

National Aeronautics and
Space Administration

John F. Kennedy Space Center
Kennedy Space Center, Florida 32899

DRAWING No. 79K30008

37 SHEETS

TECHNICAL SPECIFICATION 79K30009

DATE: SEPT. 2, 1983

DRAWING INDEX

REV STATUS	SHEET NO.	SHEET REV NO.	SHEET TITLE
B	1	V1	COVER SHEET AND DRAWING INDEX
A	2	V2	VICINITY MAP
D	3	V3	SITE PLAN
D	4	01	BUILDING LOCATION AND GRADING PLAN
F	5	02	PAD 2 ELEVATION
E	6	03	PAD 4 ELEVATION
F	7	04	PAD 2 ACCESS TOWER - DRAWING PLANS & GENERAL NOTES
C	8	05	PAD 2 ACCESS TOWER - ELEVATIONS, SECTIONS & DETAILS
C	9	06	UTILITIES ACCESS TOWER - DRAWING PLANS, ELEVATIONS, SECTIONS & DETAILS
C	10	07	ELECTRICAL, HP & FLUID LINES ACCESS TOWER - PLANS, ELEVATIONS & DETAILS
F	11	08	PAD 4 ACCESS TOWER - DRAWING PLANS & ELEVATIONS
F	12	09	PLATFORM SECTIONS & DETAILS
F	13	10	TYPICAL STAIR HANDRAILS & MISC. DETAILS
C	14	11	EQUIPMENT FOUNDATIONS & MISC. DETAILS
F	15	12	MOUNT MECHANISM PADS - PLAN & DETAILS
D	16	13	CYS-3 EQUIPMENT BUILDING
F	16	14	ELEVATIONS & DETAILS
F	17	15	SAFE-HAVEN LIFT STATION - PLANS & DETAIL
F	18	16	PSU EQUIPMENT STATION - PLAN & ELEVATION
C	19	17	PSU EQUIPMENT STATION - ELEVATIONS & DETAILS
C	20	18	PAD 4 - PNEUMATIC PIPING
D	21	19	UP HOSE SUPPORT STAND
F	22	20	PLATFORM SITE - LIFT HOISTS
F	23	21	AIR HANDLING UNIT ENCLOSURE
D	24	22	MISC. PIPING DETAILS I
E	25	23	MISC. PIPING DETAILS II
B	26	24	MISCELLANEOUS DETAILS
B	27	25	PAD 4 - PLATFORM PANELS
F	28	26	PNEUMATIC DETAILS
E	29	27	ELECTRICAL SITE PLAN - SINGLE LINE & LEGEND
F	30	28	POWER PLANS & DETAILS
C	31	29	AREA & ALTITUDE RECEPTACLE & LIGHTING PLANS
E	32	30	PANEL SCHEDULES & DETAILS
B	33	31	ELECTRICAL SITE PLAN & MISC. DETAILS
E	34	32	PSU LONG RUN CABLES - SITE PLAN
	35	33	PSU LONG RUN CABLES - ROUTING & DETAILS - VAB
E	36	34	PSU LONG RUN CABLES - ROUTING & DETAILS - LCC
E	37	35	LCC VERS CABLE TERMINATION DETAILS

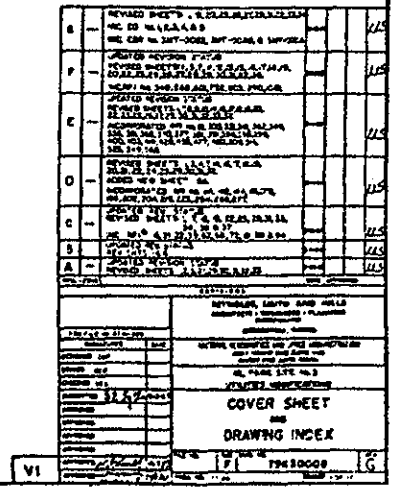

Figure 1-2. Cover Sheet Example

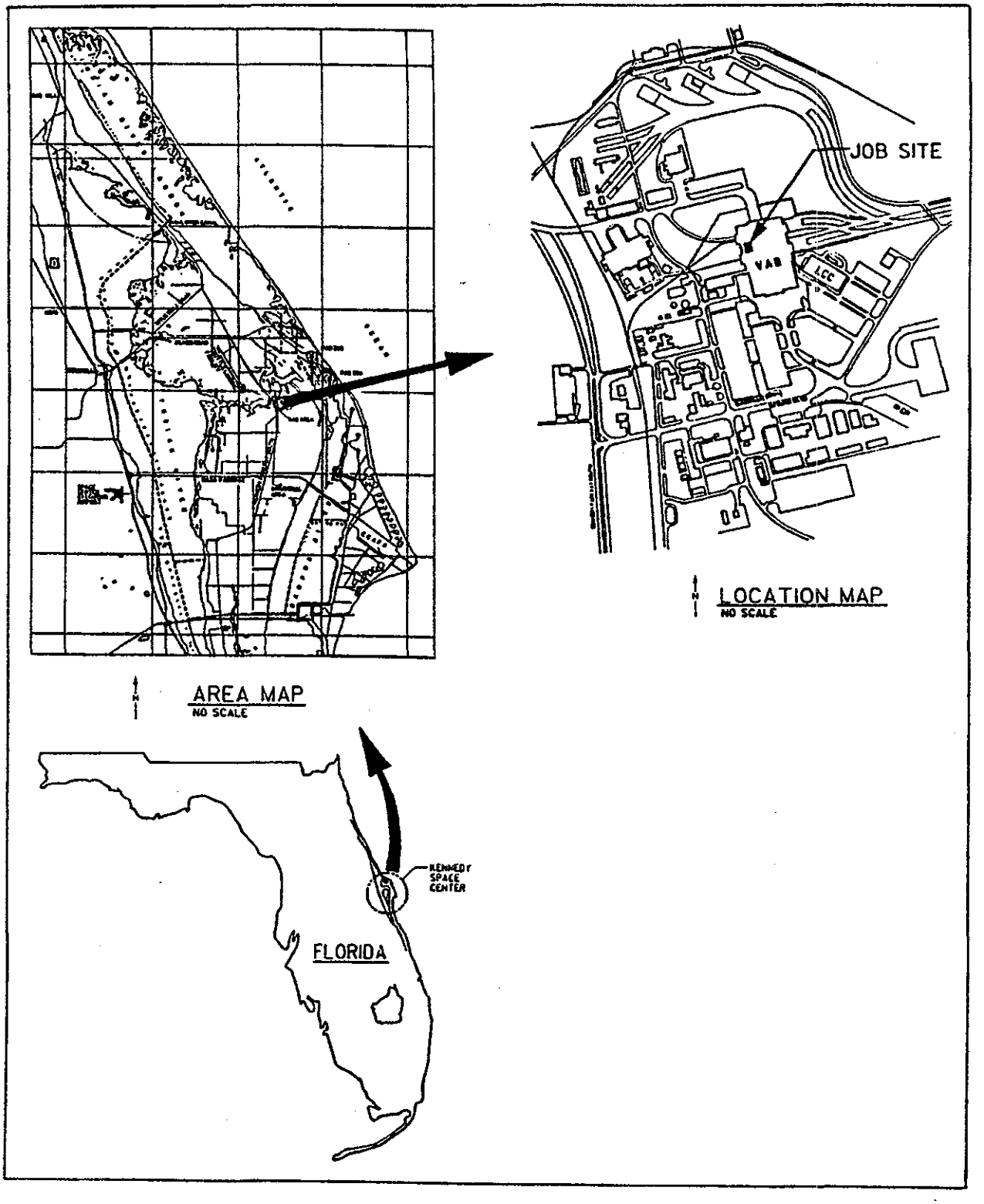

Figure 1-3. Vicinity and Location Map

numerically arranging the drawings in each functional group by means of the functional code that is assigned to each drawing sheet.

1.5 MEASUREMENT UNITS

This document contains values in both metric and U.S. Customary units. In many cases, the two values shown for the same criterion are not exact conversions of each other. The metric conversions are rounded, rational values that provide reasonable guidelines when working in metric units in the same manner as the customary units provide guidelines for working in nonmetric units. Therefore, when performing drawing functions for metric projects, the metric values shown shall be used exclusively. Likewise, when performing drawing functions for nonmetric projects, the customary values shown shall be used exclusively. The customary values shall not be soft converted to metric for use on metric projects and vice versa.

1.6 APPLICABLE DOCUMENTS

The following documents form a part of this document to the extent specified herein. When this document is used for procurement, including solicitations, or is added to an existing contract, the specific revision levels, amendments, and approval dates of said documents shall be specified in an attachment to the Solicitation/Statement of Work/Contract.

1.6.1 GOVERNMENTAL.

1.6.1.1 Specifications.

John F. Kennedy Space Center (KSC), NASA

KSC-E-166	Electrical Ground Support Equipment, Installation and Assembly, Specification for

Federal

L-P-519	Plastic Sheet, Tracing, Glazed and Matte Finish
UU-P-561	Paper, Tracing

U.S. Department of Commerce, National Bureau of Standards

Initial Graphics Exchange Specification (IGES) Version 4.0 or subsequent versions

1.6.1.2 Standards.

John F. Kennedy Space Center (KSC), NASA

KSC-STD-P-0005	Material Specifications, Preparation of
KSC-STD-152-1	Graphic Symbols for Drawings, Part 1; Facilities, Standard for

Military

MIL-STD-12	Abbreviations for Use on Drawings, Specifications, Standards and Technical Documents
MIL-STD-14	Architectural Symbols
MIL-STD-2175	Castings, Classification and Inspection of
DOD-STD-00100D(AR), Appendix B	Engineering Drawing Practices

1.6.1.3 Procedures.

KSC Engineering Development Directorate (DE)

DE-P 520	Procedure for Operation of the Engineering Documentation Center
DE-P 720	Procedure for Preparation of Document Release Authorization (DRA)

1.6.1.4 Publications.

National Aeronautics and Space Administration (NASA)

NASA Reference Publication 1059	Space Transportation System and Associated Payloads: Glossary, Acronyms, and Abbreviations

John F. Kennedy Space Center (KSC), NASA

KSC-DE-512-SM	Guide for Design Engineering of Ground Support Equipment and Facilities for Use at Kennedy Space Center

Military

DOD 5220.22-M	Industrial Security Manual for Safeguarding Classified Information

1.6.2 NON-GOVERNMENTAL

Aluminum Association (AA)

SAS 30	Specifications for Aluminum Structures

(Application for copies should be addressed to the Aluminum Association, 900 19th St. N.W., Waldorf, MD 20601)

American Concrete Institute (ACI)

ACI 315	Details and Detailing of Concrete Reinforcement

(Application for copies should be addressed to the American Concrete Institute, 22400 West Seven Mile Road, Detroit, MI 48219-0150)

American Institute Steel Construction (AISC)

M011	Manual of Steel Construction - Allowable Stress Design
M013	Detailing for Steel Construction
M014	Engineering for Steel Construction
M015	Manual of Steel Construction-Load and Resistance Factor Design

(Application for copies should be addressed to the American Institute of Steel Construction Inc., 400 North Michigan Ave., Chicago, IL 60611)

American Institute of Timber Construction (AITC)

Timber Construction Manual

(Application for copies should be addressed to the American Institute of Timber Construction, 11818 S.E. Mill Plain Blvd., Suite 415, Vancouver, WA 98684)

American National Standards Institute (ANSI)

ANSI B4.2	Preferred Metric Limits and Fits
ANSI B4.3	General Tolerances for Metric Dimensioned Products
ANSI B46.1	Surface Texture (Surface Roughness, Waviness, and Lay)
ANSI B94.6	Knurling
ANSI Y1.1	Abbreviations for Use on Drawings and in Text
ANSI Y14.2M	Line Conventions and Lettering
ANSI Y14.3	Multi and Sectional View Drawings, Engineering Drawings and Related Documentation Practices
ANSI Y14.5	Dimensioning and Tolerancing
ANSI Y14.6	Screw Thread Representation
ANSI Y14.6aM	Metric Supplement
ANSI Y14.7.1	Gear Drawing Standards, Part 1: for Spur, Helical, Double Helical, and Rack
ANSI Y14.7.2	Gear and Spline Drawing Standards - Part 2: Bevel and Hypoid Gear
ANSI Y14.9	Forgings
ANSI Y14.13M	Engineering Drawing and Related Documentation Practices - Mechanical Springs
ANSI Y14.36	Surface Texture Symbols, Engineering Drawing and Related Documentation Practices
ANSI Z32.2.3	Graphical Symbols for Pipe Fittings, Valves, and Piping

(Application for copies should be addressed to the American National Standards Institute, 1430 Broadway, New York, NY 10018)

American National Standards Institute/Association for Information and Image Management (ANSI/AIIM)

ANSI/AIIM MS 5	Microfiche
ANSI/AIIM MS 32	Standard for Micrographics - Microrecording of Engineering Source Documents on 35 mm Microfilm

(Application for copies should be addressed to the Institute for Interconnecting and Packaging Electronic Circuits, 7380 N. Lincoln Ave., Lincolnwood, IL 60646)

American National Standards Institute/American Welding Society (ANSI/AWS)

ANSI/AWS A2.4	Symbols for Welding and Nondestructive Testing
ANSI/AWS A3.0	Welding Terms and Definitions

(Applications for copies should be addressed to the American Welding Society, Inc., 2501 N.W. 7th Street, Miami, Florida 33125)

American Society of Heating, Refrigerating and Air Conditioning Engineers (ASHRAE)

ASHRAE Handbook	Fundamentals

(Application for copies should be addressed to the American Society of Heating, Refrigerating and Air Conditioning Engineers, Inc., 1791 Tullie Circle, N.E., Atlanta, GA 30329)

American Society for Testing and Materials (ASTM)

ASTM E380	Metric Practice, Standard for

(Application for copies should be addressed to the American Society for Testing and Materials, 1916 Race Street, Philadelphia, PA 19103)

Society of Automotive Engineers (SAE)/American Society for Testing and Materials (ASTM)

SAE HS 1086/ASTM DS-56	Metals & Alloys in the United Numbering System

(Application for copies should be addressed to the Society of Automotive Engineers, Inc., 400 Commonwealth Drive, Warrendale, PA 15906-0001)

State of Florida, Department of Environmental Regulation

Florida Development Manual: A Guide to Sound Land and Water Management; Stormwater Management Practices

(Application for copies should be addressed to the Department of Environmental Surfacewater Management, 3319 Maguire Blvd., Ste. 232, Orlando, FL 32803)

1.7 DEFINITIONS

For the purposes of this manual, the following definitions shall apply:

a. Cancelled drawing: a drawing that has been replaced, superseded, or duplicated by another drawing of a different number.

b. Component: the smallest assembled item identifiable as a complete, functioning, hardware entity that performs a distinctive function in the operation of an item of equipment or a system.

c. Document: a specification, drawing, list, standard, pamphlet, report, and printed, typewritten, or other information relating to the design, procurement, manufacture, test, or inspection of items or services under a contract.

d. Drawing format: a format in accordance with an accepted standard used for the preparation of an engineering drawing.

e. Drawing number: letters, numbers, or combinations of letters and numbers (which shall not be separated by dashes) that are assigned to a particular drawing for identification purposes by the design organization.

f. Drawing title: the name by which the facility shall be known and will consist of a basic name with sufficient modifiers to differentiate it from other facilities.

g. Duplicate original: a replica of an original engineering drawing made by a photoduplicating technique, or a combination of a photoduplicating technique and drafting on a medium (vellum, plastic base material, etc.) suitable for reproducing other reproducible and nonreproducible drawings.

h. Engineering drawing: an engineering document that discloses (directly or by reference) by means of pictorial or textual presentations, or combinations of both, the physical and functional end-product requirements of an item.

i. Equipment drawing: a drawing that defines controlled elements in terms of procurement, manufacture, installation, test and checkout, and spares provisioning.

j. Facility: building, structure, site, or related construction that is built, installed, or established to serve a particular purpose.

k. Flag: a triangular symbol with an enclosed note number or letter that may be used with leaders to indicate the location on the field of the drawings where a note applies. The applicable note in the list of notes shall also have its note number or letter placed within a flag.

l. Graphic symbol: a simple delineation of a component, which is intended to emphasize its function and operation in a circuit.

m. Ground support equipment: all equipment necessary to support the operations of receiving, handling, assembly, test, checkout, service, and launch of space vehicles and payloads.

n. Item: a nonspecific term used to denote any unit or product including materials, parts, assemblies, equipment, accessories, and attachments.

o. Maintained drawing: a drawing that contains design data that must be kept up to date in order to meet an operational need.

p. "May": an expression of allowance for a mandatory provision.

q. Nonmaintained drawing: a drawing that contains design data that need not be kept up to date.

r. Obsolete drawing: a drawing that depicts design information which is of no further use.

s. Operations and maintenance documentation (OMD): drawings, schematics, specifications, diagrams, flowcharts, and lists required for operations and maintenance of facilities, systems, and equipment.

t. Original date: the original date (located in the title block) of an entire basic issue is used to establish a baseline and is retained throughout the life of the drawing for historical record purposes. The current revision date is used for new inserted/added sheets when added to an existing drawing. All sheets added on the same revision will have the same date.

u. Original drawing: the drawing or copy thereof on which is kept the revision record and is recognized as the official copy by the design organization.

v. Part: one piece (or two or more pieces joined together) that is not normally subject to disassembly without destruction or impairment of designed use (e.g., outer front wheel bearing of a 3/4-ton truck, electron tube, composition resistor, screw, gear, mica capacitor, audio transformer, milling cutter, etc.).

w. Part number: letters, numbers, or combinations of letters and numbers (which may be separated by dashes) that are assigned to uniquely identify a specific item. The part number may be or may include the design drawing number, and may include a dash number suffix (if applicable).

x. Referenced document (as used in this manual): a design organization standard, drawing, specification, pamphlet, or other document referenced on a drawing or list.

y. Revision: any change to an original drawing after that drawing has been released for use.

z. Revision symbol: an identifying letter that may be accompanied by a suffix number and enclosed in a triangle, or the printed letter in a revision column or block.

aa. "Shall": an emphatic form of the verb that is used whenever a requirement is intended to express a provision that is binding and mandatory.

ab. "Should": an expression of strong recommendation of a nonmandatory provision.

ac. Specification: A document which clearly and accurately describes the essential technical requirements for specific items, services, or processes to be supplied and establishes the necessary criteria and/or procedures to ensure that requirements have been met.

ad. Standard: A document that establishes engineering and technical requirements for items, materials, processes, practices, and methods that have been adopted as norms for specific use. Standards may also establish design criteria and requirements for the selection and application of items, materials, etc., and criteria for achieving required interchangeability and uniformity.

ae. System (general): a composite of equipment, skills, and techniques capable of performing or supporting an operational role, or both. A complete system includes all equipment, related facilities, materials, software, services, and personnel required for its operation and support to the degree that it can be considered a self-sufficient unit in its intended operational environment.

af. Vendor: a design firm, manufacturer, seller, wholesaler, or agent from whom items are acquired.

ag. "Will": an expression of declaration of purpose and is used where simple futurity is required for a provision that will be binding and mandatory.

SECTION II

GENERAL DRAFTING PRACTICES

2.1 SCOPE

This section defines the general drafting practices that shall be used in the preparation of facilities drawings at KSC. These practices include drafting conventions to be used on the field of the drawings and instructions for the completion of the title blocks and revision blocks on the drawing formats.

2.2 SIGNATURES, APPROVALS, DATES, AND BLOCK ENTRIES

Unless otherwise specified by contract or order, signatures, approvals, dates, and block entries shall be made in the title and revision blocks of facilities drawings as described in the following paragraphs.

2.2.1 CAD DRAWING. A CAD-prepared drawing shall be signed as defined in the following paragraphs for each original and each subsequent revision. After the approval and release of an original drawing or subsequent revision, the initial approval signatures shall not be required on previous revisions of the drawing. Original signatures shall be required for a current revision only. The initials and names of those approving the original drawing and/or previous revisions shall be printed in place of the original signatures.

2.2.2 REVISION BLOCKS. Drawing revision blocks shall be completed by entering the required information in the revision block spaces in accordance with the following (see section XI for additional detailed requirements):

a. A-Size Drawing Revision Block. The revision block of an A-size drawing prepared on KSC Form 21-2C shall be completed by entering the required information in each space as indicated in figure 2-1. The revision block of an A-size drawing prepared on KSC Form 1-7 shall be completed by entering the required information in each space as indicated in figures 2-2 and 2-3.

b. Revision Blocks on Drawings Larger Than A-Size. Complete each revision block on facilities drawings larger than A-size (sizes B, C, D, and F) by entering the required information in each space as indicated in figures 2-2 and 2-3. The field of the drawing above the revision block shall be reserved for future revision data. A minimum of 90 millimeters (3.5 inches) of space shall be allocated for this purpose, or formats D-size and larger. No portion of the drawing or notes shall be placed in this space. See section III for KSC form numbers for these drawing formats.

APPLICATION		PART NO.	MF	REVISIONS			
NEXT ASSY	USED ON	③	④	SYM	DESCRIPTION	DATE	APPROVAL
①	②			⑤	⑥	⑦	⑧

KSC-FORM 21-2C

EACH SPACE IN THE REVISION BLOCK OF AN A-SIZE DRAWING (KSC FORM 21-2C) SHALL BE COMPLETED AS INDICATED BELOW.

SPACE/TITLE		ENTRY DESCRIPTION
①	NEXT ASSY	ENTER THE NEXT HIGHER ASSEMBLY NUMBER.
②	USED ON	ENTER THE NAME OF THE PROGRAM OR HARDWARE FOR WHICH THE DRAWING IS USED (E.G., SHUTTLE, KSC GSE).
③	PART NO.	ENTER THE PART NUMBER TO WHICH THE DRAWING APPLIES, IF APPLICABLE.
④	MF	LEAVE BLANK.
⑤	SYM	ENTER THE REVISION OF THE DRAWING REVISION (E.G., A, B, C, ETC.).
⑥	DESCRIPTION	ENTER A BRIEF DESCRIPTION OF THE CHANGES MADE BY THE REVISION, INCLUDING THE SHEET NUMBERS AND THE CHANGE ACTION APPLICABLE TO EACH SHEET (E.G., REVISION, ADDED, DELETED, REDRAWN, ETC.).
⑦	DATE	ENTER THE DATE OF THE REVISION (E.G., 3-18-90.)
⑧	APPROVAL	ENTER THE SIGNATURE OR INITIALS OF THE RESPONSIBLE ENGINEER OR SUPERVISOR AUTHORIZED TO APPROVE THE REVISION.

Figure 2-1. Revision Block Entries on A-Size Drawings on KSC Form 21-2C

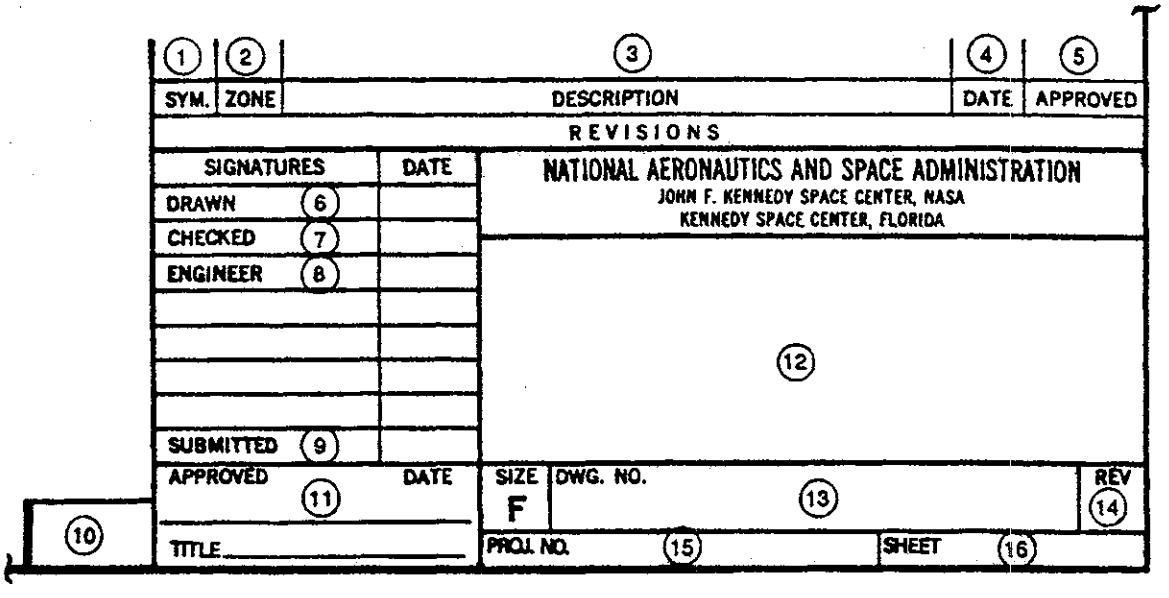

EACH SPACE IN THE TITLE BLOCK OF AN A-SIZE DRAWING ON KSC FORM 1-7 AND ON A DRAWING LARGER THAN A-SIZE SHALL BE COMPLETED AS INDICATED BELOW. IF A SPACE IS NOT APPLICABLE, LEAVE BLANK.

SPACE/TITLE		ENTRY DESCRIPTION
1	SYM	ENTER THE REVISION LETTER OF THE DRAWING REVISION (E.G., A, B, C, ETC.).
2	ZONE	ENTER THE ZONE ON THE FIELD OF THE DRAWING THAT IS AFFECTED BY THE REVISION.
3	DESCRIPTION	ENTER A BRIEF DESCRIPTION OF CHANGES MADE BY THE REVISION, INCLUDING THE SHEET NUMBERS AND THE CHANGE ACTION APPLICABLE TO EACH SHEET. (SEE SECTION XI.)
4	DATE	ENTER THE DATE OF THE REVISION (E.G., 3-18-91).
5	APPROVAL	ENTER THE SIGNATURE OR INITIALS OF THE RESPONSIBLE ENGINEER OR SUPERVISOR AUTHORIZED TO APPROVE THE REVISION.
6	DRAWN	ENTER THE NAME OR INITIALS OF THE DRAFTSMAN AND DATE.
7	CHECKER	ENTER THE NAME OR INITIALS OF THE CHECKER AND DATE.
8	ENGINEER	ENTER THE NAME OR INITIALS OF THE ENGINEER. USE ADDITIONAL SPACES BELOW FOR OTHER RESPONSIBLE ENGINEERS AND DATES.
9	SUBMITTED	ENTER THE NAME OR INITIALS OF THE ENGINEER OR SUPERVISOR SUBMITTING THE DRAWING, SHEET FOR APPROVAL AND DATE.
10		ENTER THE FUNCTIONAL CODE SHEET NUMBER (E.G., V-1, A-2, S-6, M-3, E-17, ETC.).

Figure 2-2. Title/Revision Block Entries on A-Size Drawings on KSC Form 1-7 and on Drawings Larger Than A-Size (Sheet 1 of 2)

SPACE/TITLE	ENTRY DESCRIPTION
(11) APPROVED	ENTER THE NAME, AND TITLE, OF THE SUPERVISOR OR MANAGER AUTHORIZED TO APPROVE THE DRAWING SHEET AND DATE.
(12)	ENTER THE TITLE OF THE DRAWING. (SEE SECTION IV.)
(13) DWG. NO.	ENTER THE DRAWING NUMBER (E.G., 79K12345).
(14) REV.	ENTER THE REVISION LETTER OF THE DRAWING SHEET (E.G., A, B, F, ETC.).
(15) PROJ. NO.	ENTER THE PROJECT NUMBER (PCN) THAT AUTHORIZES THE PREPARATION OF THE DRAWING SHEET (E.G., 94567).
(16) SHEET	ENTER THE SHEET NUMBER OF EACH SHEET (E.G., SHEET 2 OF). FOR MULTI-SHEET DRAWINGS, THE TOTAL NUMBER OF SHEETS IN THE DRAWING SHALL ONLY BE ENTERED ON THE FIRST AND LAST SHEETS OF THE DRAWING (E.G., SHEET 1 OF 10, SHEET 10 OF 10). (ALPHANUMERIC SHEET NUMBERS AS DESCRIBED IN 11.6 SHOULD BE AVOIDED FOR INITIAL RELEASES.)

Figure 2-2. Title/Revision Block Entries on A-Size Drawings on KSC Form 1-7 and on Drawings Larger Than A-Size (Sheet 2 of 2)

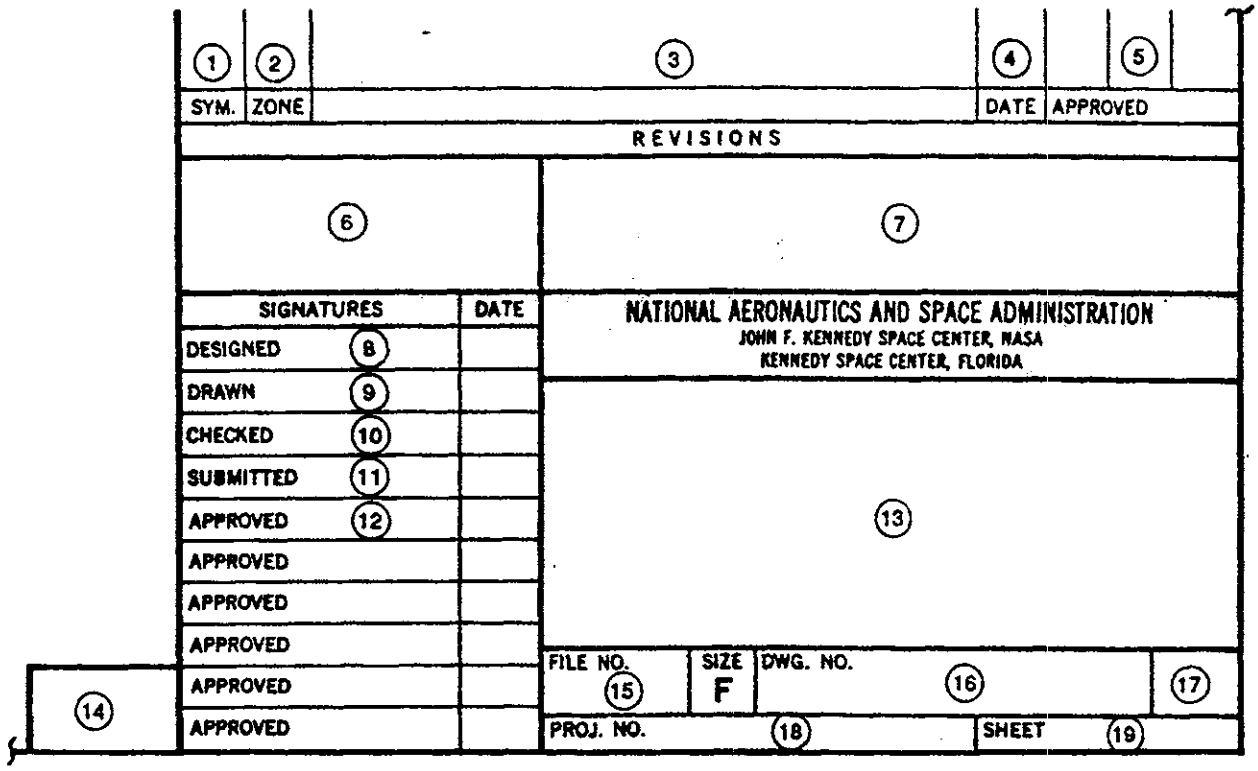

EACH SPACE IN THE TITLE BLOCK OF A FACILITIES A&E DRAWING SHALL BE COMPLETED AS INDICATED BELOW. IF A SPACE IS NOT APPLICABLE, LEAVE BLANK.

SPACE/TITLE		ENTRY DESCRIPTION
1	SYM	ENTER THE REVISION LETTER OF THE DRAWING REVISION (E.G., A, B, C, ETC.).
2	ZONE	ENTER THE ZONE ON THE FIELD OF THE DRAWING THAT IS AFFECTED BY THE REVISION.
3	DESCRIPTION	ENTER A BRIEF DESCRIPTION OF CHANGES MADE BY THE REVISION, INCLUDING THE SHEET NUMBERS AND THE CHANGE ACTION APPLICABLE TO EACH SHEET. (SEE SECTION XI.)
4	DATE	ENTER THE DATE OF THE REVISION (E.G., 3-18-91).
5	APPROVAL	ENTER THE SIGNATURE OR INITIALS OF THE RESPONSIBLE ENGINEER OR SUPERVISOR AUTHORIZED TO APPROVE THE REVISION.
6		ENTER THE NAME AND ADDRESSES OF ANY A&E SUBCONTRACTORS APPLICABLE TO THE SHEET, OR ENTER THE NAME OF THE A&E PROJECT MANAGER OR A&E JOB NUMBER AS APPLICABLE.
7		ENTER THE NAME AND ADDRESS OF THE A&E RESPONSIBLE FOR THE PREPARATION OF THE DRAWING SHEET.
8	DESIGNED	ENTER THE NAME OR INITIALS OF THE DESIGNER AND DATE.

Figure 2-3. Title Block Entries on a Facilities A&E Drawing (Sheet 1 of 2)

SPACE/TITLE	ENTRY DESCRIPTION
(9) DRAWN	ENTER THE NAME OR INITIALS OF THE DRAFTSMAN AND DATE.
(10) CHECKED	ENTER THE NAME OR INITIALS OF THE CHECKER AND DATE.
(11) SUBMITTED	ENTER THE NAME OR INITIALS OF THE ENGINEER OR SUPERVISOR SUBMITTING THE DRAWING SHEET FOR APPROVAL AND DATE.
(12) APPROVED	ENTER THE SIGNATURES OR INITIALS OF THE ENGINEER, SUPERVISOR, OR MANAGER AUTHORIZED TO APPROVE THE DRAWING SHEET AND DATE. USE THE ADDITIONAL APPROVED BLOCKS AT THE BOTTOM FOR APPROVAL BY THE HIGHEST LEVEL OF SUPERVISION OR MANAGEMENT REQUIRED.
(13)	ENTER THE TITLE OF THE DRAWING. (SEE SECTION IV.)
(14)	ENTER THE FUNCTIONAL CODE SHEET NUMBER (E.G., V-1, A-2. S-6, M-3, E-17, ETC.).
(15) FILE NO.	ENTER THE A&E OR GOVERNMENT PROJECT FILE NUMBER.
(16) DWG. NO.	ENTER THE DRAWING NUMBER (E.G., 79K12345).
(17)	ENTER THE REVISION LETTER OF THE DRAWING SHEET (E.G., A, B, C, ETC.).
(18) PROJECT NO.	ENTER THE PROJECT NUMBER (PCN) THAT AUTHORIZES THE PREPARATION OF THE DRAWING SHEET (E.G., 94567).
(19) SHEET	ENTER THE SHEET NUMBER OF EACH SHEET (E.G., SHEET 2 OF). FOR MULTI-SHEET DRAWINGS, THE TOTAL NUMBER OF SHEETS IN THE DRAWING SHALL ONLY BE ENTERED ON THE FIRST AND LAST SHEETS OF THE DRAWING (E.G., SHEET 1 OF 10, SHEET 10 OF 10). (ALPHANUMERIC SHEET NUMBERS AS DESCRIBED IN 11.6 SHOULD BE AVOIDED FOR INITIAL RELEASES.)

Figure 2-3. Title Block Entries on a Facilities A&E Drawing (Sheet 2 of 2)

2.2.3 TITLE BLOCKS. Drawing title blocks shall be completed by entering the required information in the title block space in accordance with the following:

a. A-Size Drawing Title Block. The title block of an A-size drawing prepared on KSC Form 21-2C shall be completed by entering the required information in each space in the title block as indicated in figure 2-4. The title block of an A-size drawing prepared on KSC Form 1-7 shall be completed in accordance with figure 2-2.

b. Title Block Entries on Drawings Larger Than A-Size. Complete each title block on drawings larger than A-size (sizes B, C, D, and F) by entering the required information in each space in the title block as indicated in figure 2-2.

c. Title Block Entries on Facilities Architect and Engineer (A&E) Drawings. Complete each title block on facilities A&E drawings (size F only) by entering the required information in each space in the title block as indicated in figure 2-3.

2.3 PARTS IDENTIFICATION/PARTS LIST

2.3.1 PARTS IDENTIFICATION. Parts shall only be identified on the field of the drawing to the extent necessary to fabricate, purchase, install, or prepare a bid to construct the facility.

2.3.2 PARTS LIST. A parts list shall not be required on facilities drawings. If special conditions require a list of parts, the list shall be an integral part of the drawing. Separate parts lists shall not be permitted. See figures 2-5 and 2-6 for simplified parts list formats.

2.4 DRAWING SCALE

All facilities drawings, except diagrams, schematics, perspectives, tabulations, and other similar drawings, should be drawn to scale.

2.4.1 SELECTION OF SCALE. When practicable, drawings should show an elevation, plan, section, or detail at full-scale size. When it is not practicable to prepare the drawing at full scale, the drawing may be prepared to a reduced or enlarged scale.

2.4.2 INDICATION OF SCALE. The scale or scales to which drawings are prepared shall be indicated in the field of the drawing. The scale shall be indicated with a common fraction and a linear measurement (e.g., 1 mm = 1 m, 1 mm = 200 mm, 1/8" = 1' - 0", 1" = 20' - 0", etc.). The scales to which views, sections, or details are drawn shall be entered directly below the title of the view, section, or detail. For scaling purposes, a graphic scale shall be shown adjacent to the title block for each scale shown on the sheet. (See figure 2-7.)

UNLESS OTHERWISE SPECIFIED DIMENSIONS ARE IN INCHES TOLERANCES ON FRACTIONS DECIMALS ANGLES (11)	ORIGINAL DATE OF DRAWING (1)		(2)		JOHN F. KENNEDY SPACE CENTER, NASA KENNEDY SPACE CENTER FLORIDA
	DRAFTSMAN (3)	CHECKER (4)			
	CHECKER (5)	STRESS (6)			
MATERIAL (12)	ENGINEER (7)	ENGINEER (8)			
HEAT TREATMENT (13)	SUBMITTED (9)		SCALE (15)	DWG SIZE	(17)
FINAL PROTECTIVE FINISH (14)	APPROVED (10)		UNIT WT (16)	A	SHEET (18) OF

KSC FORM 21-2C (REV. 3/76)

EACH SPACE IN THE TITLE BLOCK OF THE A-SIZE DRAWING (KSC FORM 21-2C) SHALL BE COMPLETED AS INDICATED BELOW. IF A SPACE IS NOT APPLICABLE, LEAVE BLANK.

SPACE/TITLE	ENTRY DESCRIPTION
(1) ORIGINAL DATE OF DRAWING	ENTER THE DATE OF THE ORIGINAL DRAWING (AS DEFINED IN 1.6).
(2)	ENTER THE TITLE OF THE DRAWING.
(3) DRAFTSMAN	ENTER THE NAME OR INITIALS OF THE DRAFTSMAN.
(4) CHECKER	ENTER THE NAME OR INITIALS OF THE CHECKER.
(5) CHECKER	ENTER THE NAME OR INITIALS OF OTHER CHECKERS.
(6) STRESS	ENTER THE NAME OR INITIALS OF THE STRESS ENGINEER.
(7) ENGINEER	ENTER THE NAME OR INITIALS OF THE DESIGN ENGINEER.
(8) ENGINEER	ENTER THE NAME OR INITIALS OF OTHER ENGINEERS (E.G., MATERIALS, STRESS).
(9) SUBMITTED	ENTER THE SIGNATURE OF THE ENGINEER SUBMITTING THE DRAWING FOR APPROVAL.
(10) APPROVED	ENTER THE SIGNATURE OF THE RESPONSIBLE SUPERVISOR OR MANAGER AUTHORIZED TO APPROVE THE DRAWING.
(11) TOLERANCES ON FRACTIONS DECIMALS ANGLES	ENTER THE APPLICABLE TOLERANCES ON DECIMALS, FRACTIONS, AND ANGLES (E.G., .XX ± .03, ±1/32, ±1°).
(12) MATERIAL	ENTER THE APPLICABLE MATERIAL SPECIFICATIONS.
(13) HEAT TREATMENT	ENTER THE APPLICABLE HEAT TREATMENT REQUIREMENT AND SPECIFICATION.
(14) FINAL PROTECTIVE FINISH	ENTER THE APPLICABLE FINAL PROTECTIVE FINISH AND SPECIFICATION.
(15) SCALE	ENTER THE SCALE OF THE DRAWING.
(16) UNIT WT	ENTER THE UNIT WEIGHT OF THE ITEM SHOWN ON THE DRAWING.
(17)	ENTER THE DRAWING NUMBER (E.G., 79K07051).
(18) SHEET OF	ENTER THE SHEET NUMBER AND TOTAL NUMBER OF SHEETS IN THE DRAWING (E.G., SHEET 1 OF 5). (ALPHANUMERIC SHEET NUMBERS AS DESCRIBED IN 11.6 SHOULD BE AVOIDED FOR INITIAL RELEASES.)

Figure 2-4. Title Block Entries on A-Size Drawings on KSC Form 21-2C

ITEM NO.	QUANTITY	DESCRIPTION	MATL/PART NO.

FLAG NOTE WHEN USED

THIS SIMPLIFIED PARTS LIST MAY BE USED FOR PROCUREMENT OR MODIFICATION/INSTALLATION DRAWINGS REQUIRING NO HARDWARE ASSEMBLY, INSTALLATION PART NUMBERS, OR TRACING OF PART CHANGES. WHEN THIS FORMAT IS USED, IT SHALL BE COMPLETED AS FOLLOWS:

BLOCK TITLE	ENTRY DESCRIPTION
ITEM NO.	BEGINNING WITH THE NUMBER 1, ENTER NUMBERS CONSECUTIVELY FOR THE ITEMS OR PARTS (E.G., 1, 2, 3, ETC.).
QUANTITY	ENTER THE TOTAL NUMBER OF EACH ITEM REQUIRED TO COMPLETE THE HARDWARE, SYSTEM, OR MODIFICATION PROJECT.
DESCRIPTION	ENTER A COMPLETE DESCRIPTION OF THE ITEM, INCLUDING SIZE OR SHAPE (E.G., ANGLE 1 X 1 X 1/8, ANGLE 25 X 25 X 3, TUBING 1 X .095).
MATL/PART NO.	ENTER THE MATERIAL SPECIFICATION OR PART NUMBER. A FLAG NOTE MAY BE USED TO PROVIDE THE MANUFACTURER'S NAME, COMMERCIAL AND GOVERNMENT ENTITY (CAGE) NUMBER, OR SPECIAL NOTES FOR FABRICATION, ASSEMBLY, OR INSTALLATION.

Figure 2-5. Simplified Parts List Format

ITEM NO.	DESCRIPTION	MATL/PART NO.

FLAG NOTE WHEN USED

THIS FORMAT SHALL BE USED FOR A SIMPLIFIED PARTS LIST WHEN A PART OR QUANTITY TAKEOFF IS TO BE PERFORMED BY THE FABRICATING, INSTALLING, OR CONSTRUCTION CONTRACTOR. WHEN THIS FORMAT IS USED, IT SHALL BE COMPLETED AS FOLLOWS:

BLOCK TITLE	ENTRY DESCRIPTION
ITEM NO.	BEGINNING WITH THE NUMBER 1, ENTER NUMBERS CONSECUTIVELY FOR THE ITEMS OR PARTS (E.G., 1, 2, 3, ETC.).
DESCRIPTION	ENTER A COMPLETE DESCRIPTION OF THE ITEM, INCLUDING SIZE OR SHAPE (E.G., ANGLE 1 X 1 X 1/8, ANGLE 25 X 25 X 3, TUBING 1 X .095).
MATL/PART NO.	ENTER THE MATERIAL SPECIFICATION OR PART NUMBER. A FLAG NOTE MAY BE USED TO PROVIDE THE MANUFACTURER'S NAME, CAGE NUMBER, OR SPECIAL NOTES FOR FABRICATION, ASSEMBLY, OR INSTALLATION.

Figure 2-6. Simplified Parts List Format for Use When Parts or Quantity Takeoff is to Be Performed by the Contractor

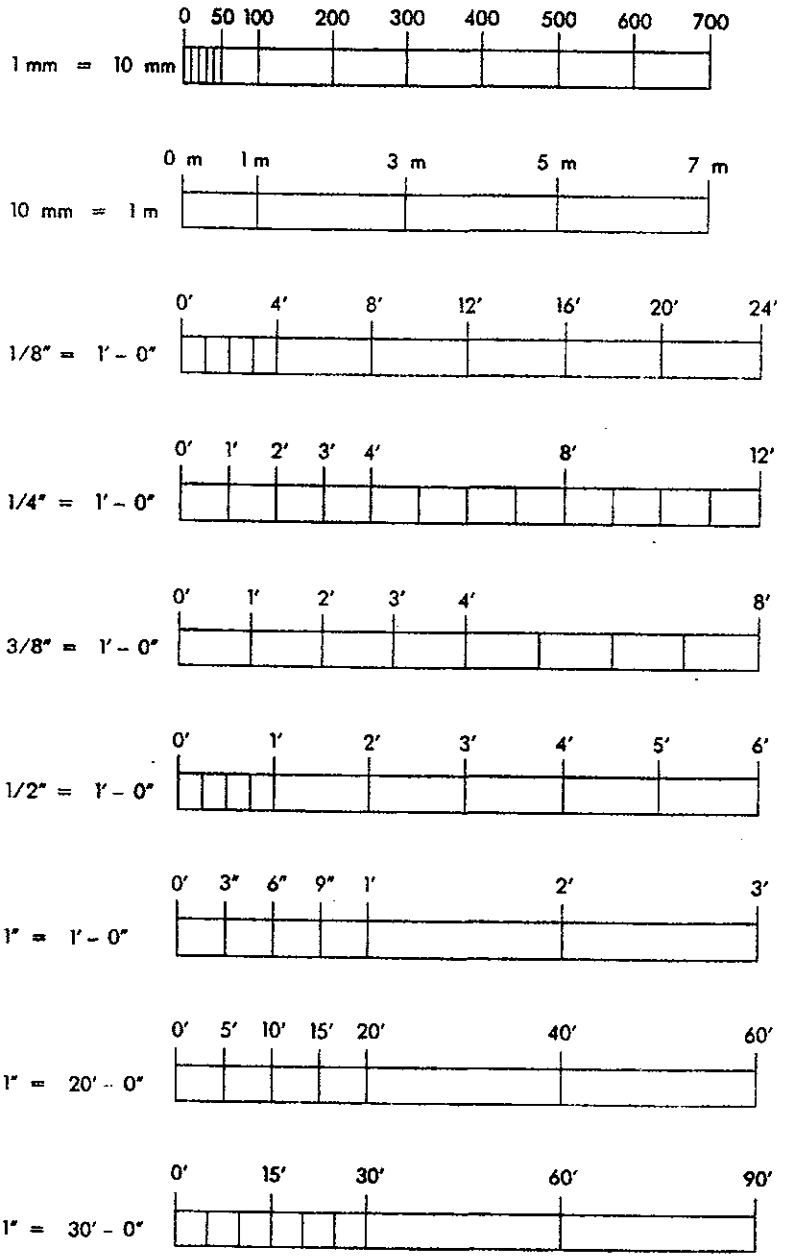

Figure 2-7. Forms of Graphic Scales

2.4.3 NOT TO SCALE. For drawings not prepared to any scale, the word NONE shall be entered after SCALE in the field of the drawing format. When an individual not-to-scale dimension is used within a view, section, or detail, it shall be noted by the use of the abbreviation NTS after the dimension callout. When a view, section, or detail contains all not-to-scale dimensions, NOT TO SCALE shall be entered directly below the title of the view, section, or detail.

2.5 DIMENSIONING AND TOLERANCING

American National Standards Institute (ANSI) Y14.5 describes permissible dimensioning and tolerancing variations (both metric and U.S. Customary) in respect to factory-oriented machined and sheet metal parts and may be utilized in its entirety to illustrate permissible variations as described, or a drawing may definitely state (by dimensions, form tolerances, or notes) those portions of ANSI Y14.5 that are applicable. In either case, the draftsman, designer, and engineer must be completely familiar with the contents of ANSI Y14.5 in order to evaluate its required usage and effect. Additional specifications on dimensioning and tolerancing of metric products are described in ANSI B4.3.

When referenced by drawing note, ANSI Y14.5 defines the variations permissible unless modified (either smaller or greater tolerances) by drawing dimensions, form tolerances, etc., and is an effective means of establishing control and interpretation of implied tolerances (squareness, flatness, etc.). Knurl dimensioning shall be in accordance with ANSI B94.6. Metric limits and fits of holes and shafts shall be in accordance with ANSI B4.2.

2.6 DUAL DIMENSIONING

Dual dimensioning is a procedure for showing values from two different measurement systems [e.g., International System of Units (SI) or metric system, and the U.S. Customary Units] on the same drawing. Dual dimensions shall not be used on metric projects except to describe interfaces with nonmetric items as authorized by the responsible design organization. The method used to dual dimension a drawing shall be either the position method or the bracket method. With the position method (figure 2-8), the value in the primary measurement units (primary value) is separated by a line from the value in the secondary measurement units (secondary value). With the bracket method (figure 2-9), the primary value is followed by the secondary value in brackets. When either method is used, a drawing note shall be provided explaining how the primary and secondary dimensions are identified (e.g., "DIMENSIONS IN [ ] ARE IN INCHES").

2.7 METRIC VALUES

Metric values, when used on drawings, shall be in accordance with ASTM E380.

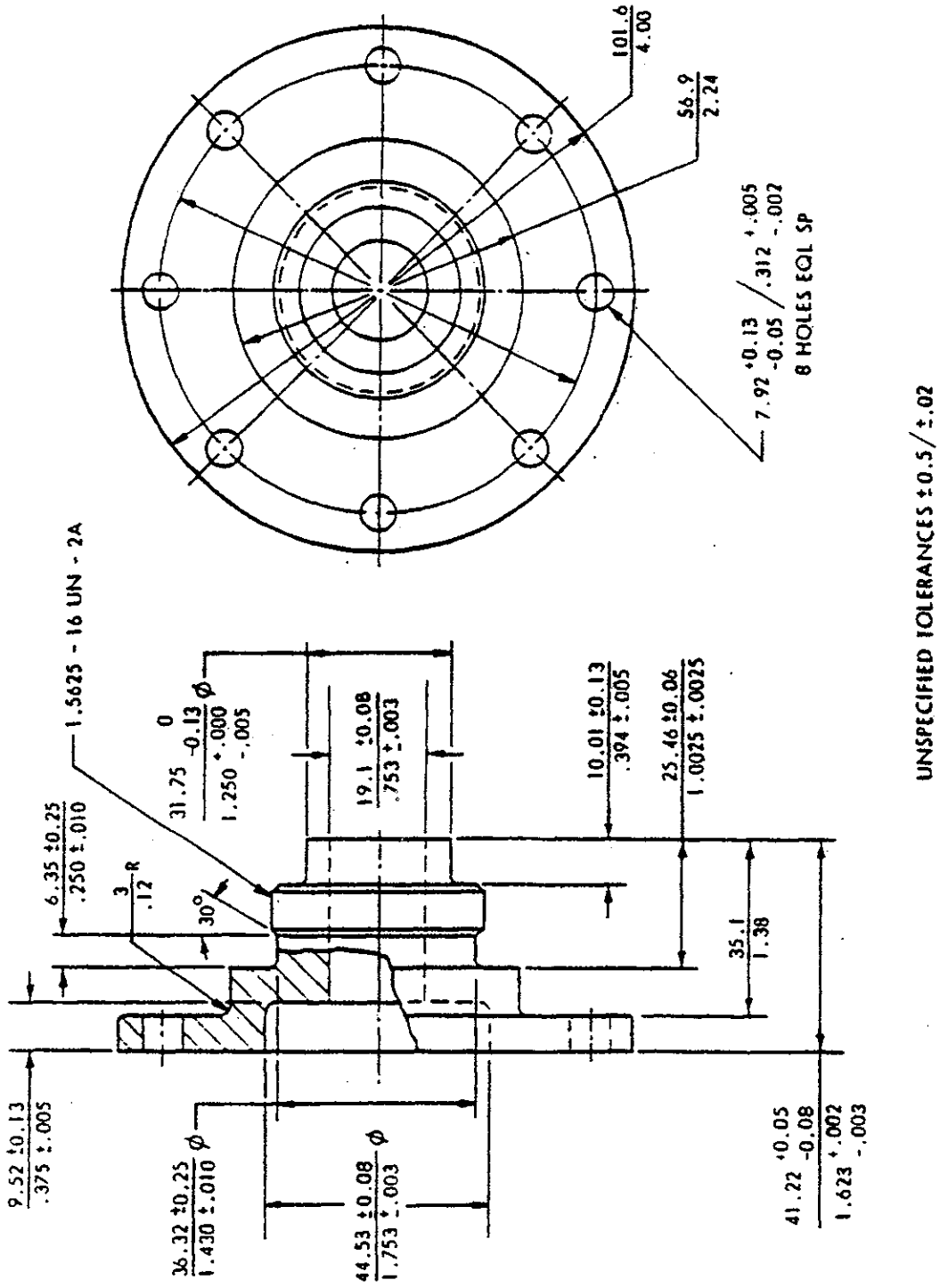

Figure 2-8. Position Method

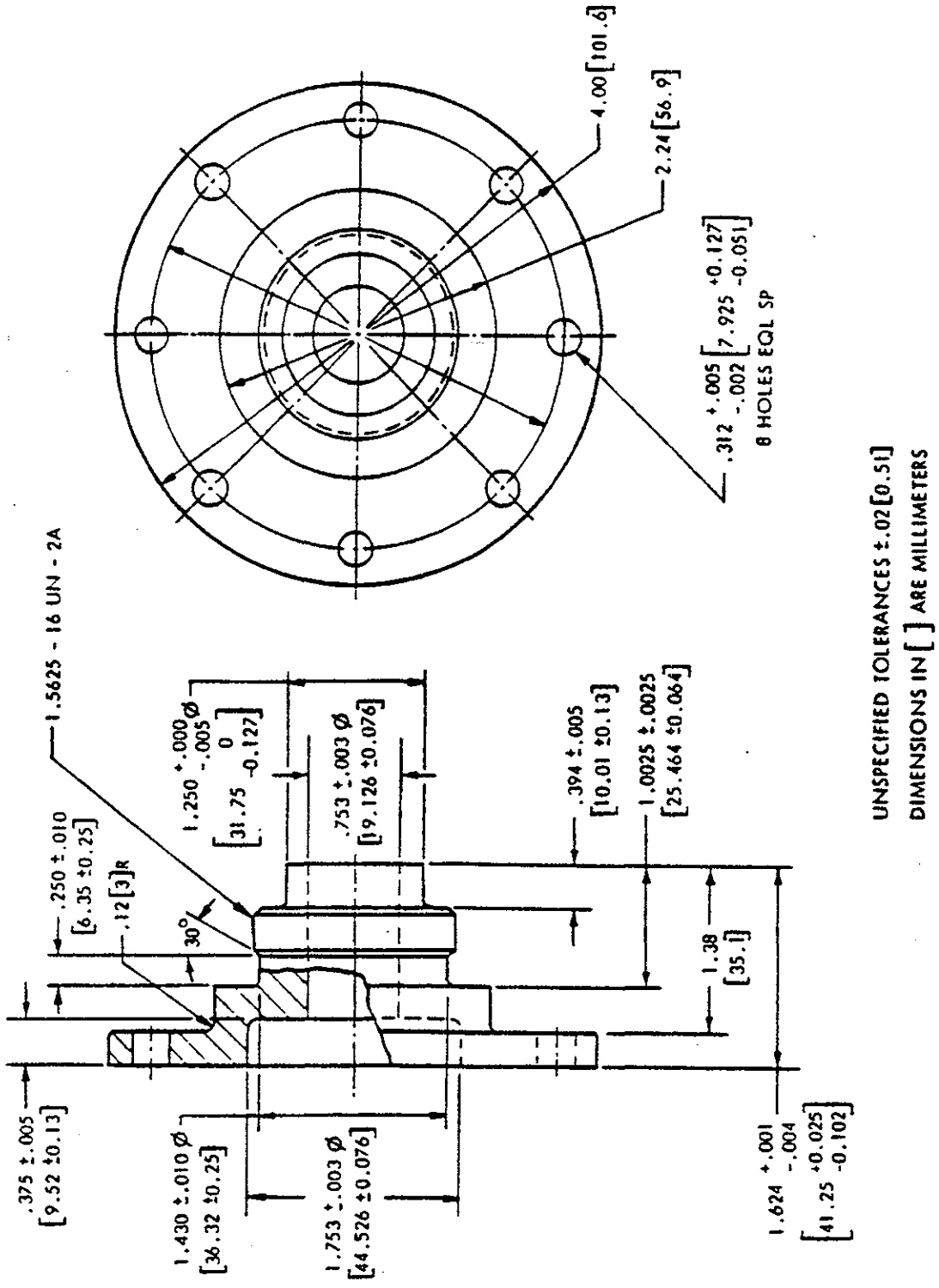

Figure 2-9. Bracket Method

2.8 SCREW THREADS

Screw threads shall be represented in accordance with ANSI Y14.6 and ANSI Y14.6aM.

2.9 MECHANICAL SPRINGS

Mechanical springs shall be represented in accordance with ANSI Y14.13M.

2.10 GEARS

Gears shall be specified on drawings in accordance with ANSI Y14.7.1 and ANSI Y14.7.2.

2.11 FORGINGS

Forgings shall be specified in accordance with ANSI Y14.9.

2.12 WELDING PRACTICES

Welding practices shall be in accordance with the terms and definitions specified in American National Standards Institute/American Welding Society (ANSI/AWS) A3.0. Nondestructive testing and welding symbols shall be in accordance with ANSI/AWS A2.4.

2.13 ABBREVIATIONS

Abbreviations may be used on drawings to conserve space when their meaning is clear. Little-known abbreviations shall be explained on the drawing. When abbreviations are used, they shall conform to MIL-STD-12 or ANSI Y1.1. Acronyms and abbreviations commonly used at KSC are contained in NASA Reference Publication 1059, which shall also be used for defining acronyms and abbreviations.

2.14 GRAPHIC SYMBOLS

Graphic symbols used on facilities drawings shall be in accordance with KSC-STD-152-1 and ANSI Y14.5.

2.15 SURFACE TEXTURE. Surface texture or roughness, waviness, and lay on facilities drawings shall be indicated in accordance with ANSI B46.1. Surface texture symbols shall be in accordance with ANSI Y14.36. Unless otherwise specified, the finish symbol (✓) preceded by the roughness value (e.g., ^{32}✓) shall indicate the maximum allowable surface roughness produced by a machining operation.

When a surface is produced by other methods such as casting, forging, punching, molding, etc., the method shall be indicated by a note adjacent to the symbol (e.g., 250 AS CAST, 125 AS PUNCHED, AS ROLLED, etc.).

A finish symbol with the roughness value ($^{xx}\surd$) shown on a part produced by casting, forging, etc., shall indicate the allowance required to attain the machined surface finish on the drawing. In general, the finish symbol with the roughness value shall be shown only on the view where the controlling dimension is located and omitted from all other views. However, when a machined surface appears in several views on a large drawing (size F), the finish symbol without the roughness value may be shown in the different views or sections. When using multiple sheet drawings, the finish symbol shall be placed near the controlling dimension and the symbol shall be placed on all the machined surfaces shown on each sheet.

A delineation should specify any surfaces of a machined part that are a different roughness from the majority of parts. If all the parts have the same surface, the finish symbol with the roughness value shall be used unless otherwise specified.

2.16 COMPUTER-AIDED DESIGN (CAD) DRAWINGS

The use of CAD systems in preparing drawings is acceptable if the drawings prepared meet the requirements for legibility and reproducibility specified in this document and the system used provides the following capabilities.

a. Capability to generate full-size drawings.

b. Capability to prepare drawings on material as specified in paragraph 3.6 and to print the drawings on the front side of the formats.

c. Capability to produce full-size drawings that are capable of being manually revised.

d. Capability to produce drawings that meet the microfilming requirements specified in this document.

e. Capability of being converted in accordance with the Initial Graphics Exchange Specification (IGES) software or drawing interchange file (DXF) software format.

2.17 CAD LINE VARIANCE

Line conventions may vary for CAD-prepared drawings as follows:

a. All lines and letters on originals may be applied using ink.

b. All lines may be the same width if microfilm requirements are met. It is preferred that lines for the outline and features of the item shown on a drawing be wider than dimension lines.

2.18 MULTIVIEWS AND SECTIONAL VIEWS

Multiviews and sectional views shown on facilities drawings shall be in accordance with ANSI Y14.3. Isometric, pictorial, or other views may be shown on the drawings providing there is some particular advantage and clarity is not degraded.

2.19 SECTION, DETAIL, AND VIEW IDENTIFICATION

Identification of sections, details, and views shall be assigned in alphabetical sequence. In cases where the single alphabet is exhausted, multiple letters may be used (e.g., AA, AB, etc.). The letters I, O, Q, and X shall not be used. In most cases, no section, view, or detail of the same drawing section (e.g., electrical, etc.) shall carry the same identifying letter. For example, if section A exists, there shall be view A or detail A. Identification letters and numbers of sections, details, or views shall be the same identification letters or numbers as the corresponding callouts. Callouts shall be drawn in accordance with 2.19.1 through 2.19.3. Examples of section, detail, and view identifications are shown in figure 2-10.

Callouts of a section, detail, or view used in multiple places shall be drawn either of the two ways shown in figure 2-11. The first method would be to add a ball callout circle to the identification where each drawing is located, resulting in multiple ball callout circles placed side by side. The other method would be to indicate the first page location in the lower half of the callout circle (left quadrant for the three-part callout) and then list the other pages beneath the circle.

2.19.1 BALL CALLOUTS. Ball callouts shall be used to identify sections, details, and views. The callout shall be a 16-millimeter-(5/8-inch-)diameter circle divided into two parts, as described in 2.19.1.1, or into three parts, as described in 2.19.1.2. Either the two-part or three-part ball may be used; however, the type that is selected shall be used consistently throughout the drawing.

2.19.1.1 Two-Part Ball Callout. The two-part ball callout (figure 2-12) shall be a 16-millimeter-(5/8-inch-) diameter circle with a horizontal line dividing the upper and lower halves of the circle. The section, detail, or view identification letter shall be displayed in the upper half of the circle. The sheet number from which the section, detail, or view was taken shall be indicated in the lower half of the circle. A dash line in the lower half indicates that the location is on the same page. If the same section, detail, or view is used on multiple sheets, the same identifying letter shall be used.

2.19.1.2 Three-Part Ball Callout. The three-part ball callout (figure 2-12) shall be a 16-millimeter-(5/8-inch-) diameter circle with a horizontal line dividing the upper and lower halves of the circle and a vertical line that divides the lower half of the circle into two quadrants. The section, detail, or view identification letter shall be displayed in the upper half of the circle. In the lower left quadrant of the circle, the sheet number from which the section, detail, or view was taken shall be displayed. If the section, detail, or view originates

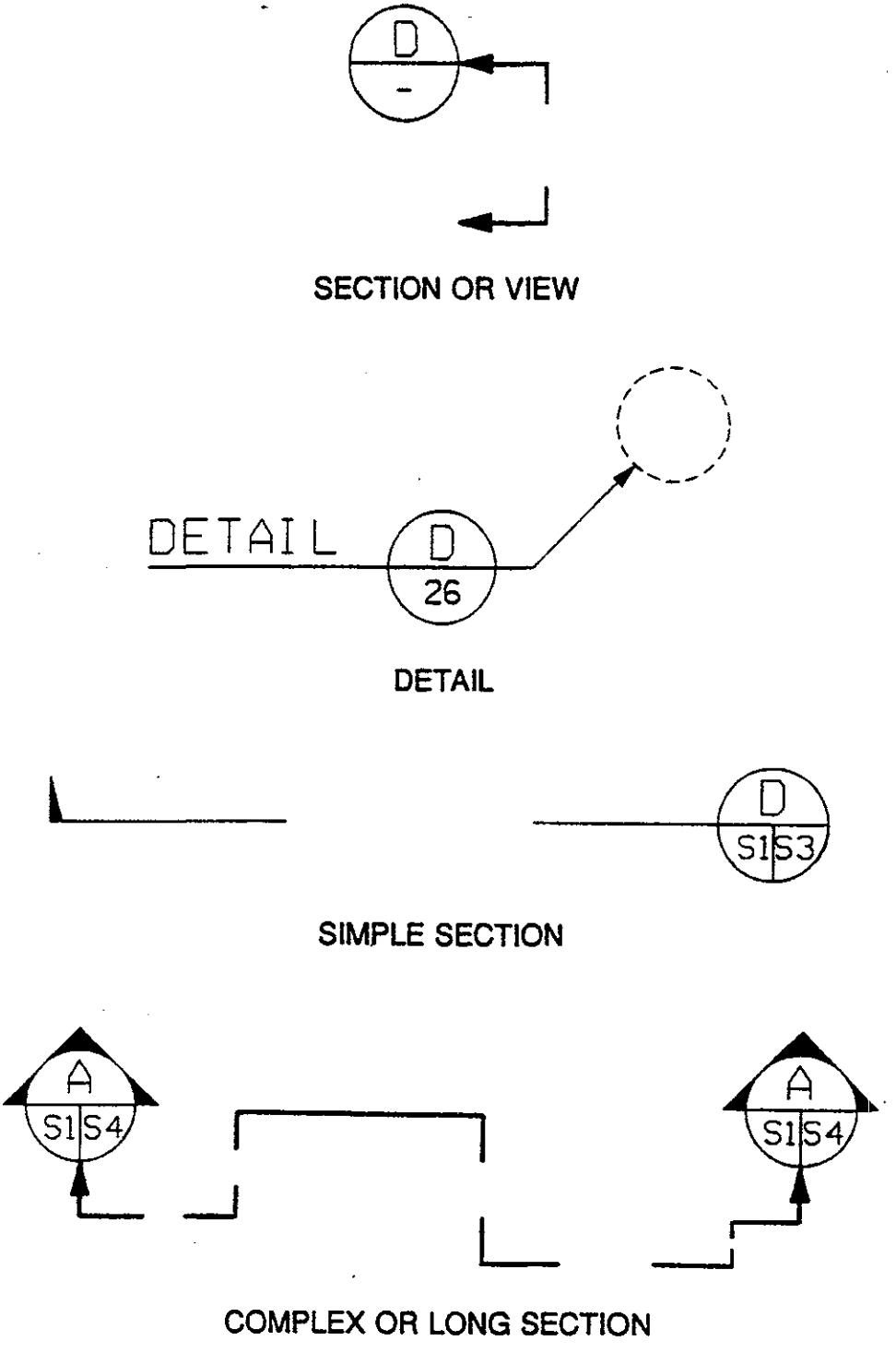

Figure 2-10. Examples of Section, Detail, and View Identifications

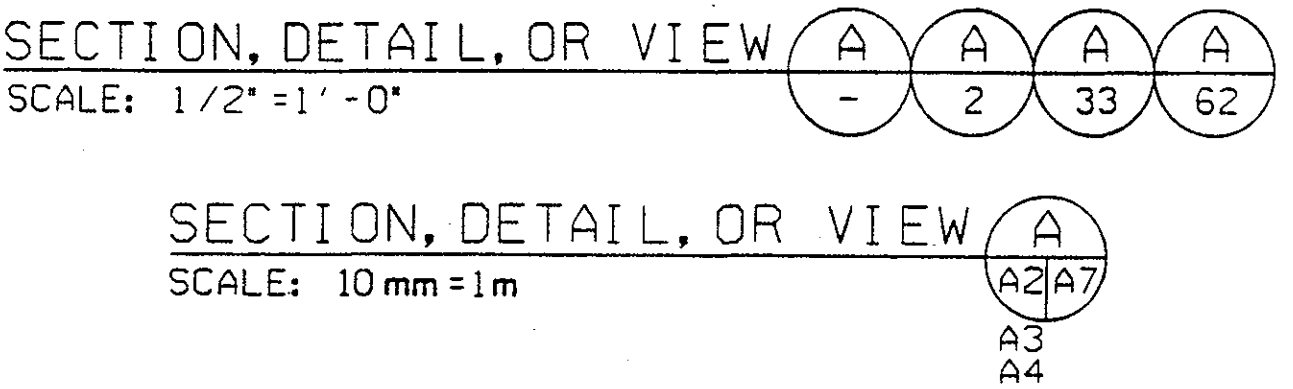

Figure 2-11. Examples of Section, Detail, or View Callouts Used in Multiple Places

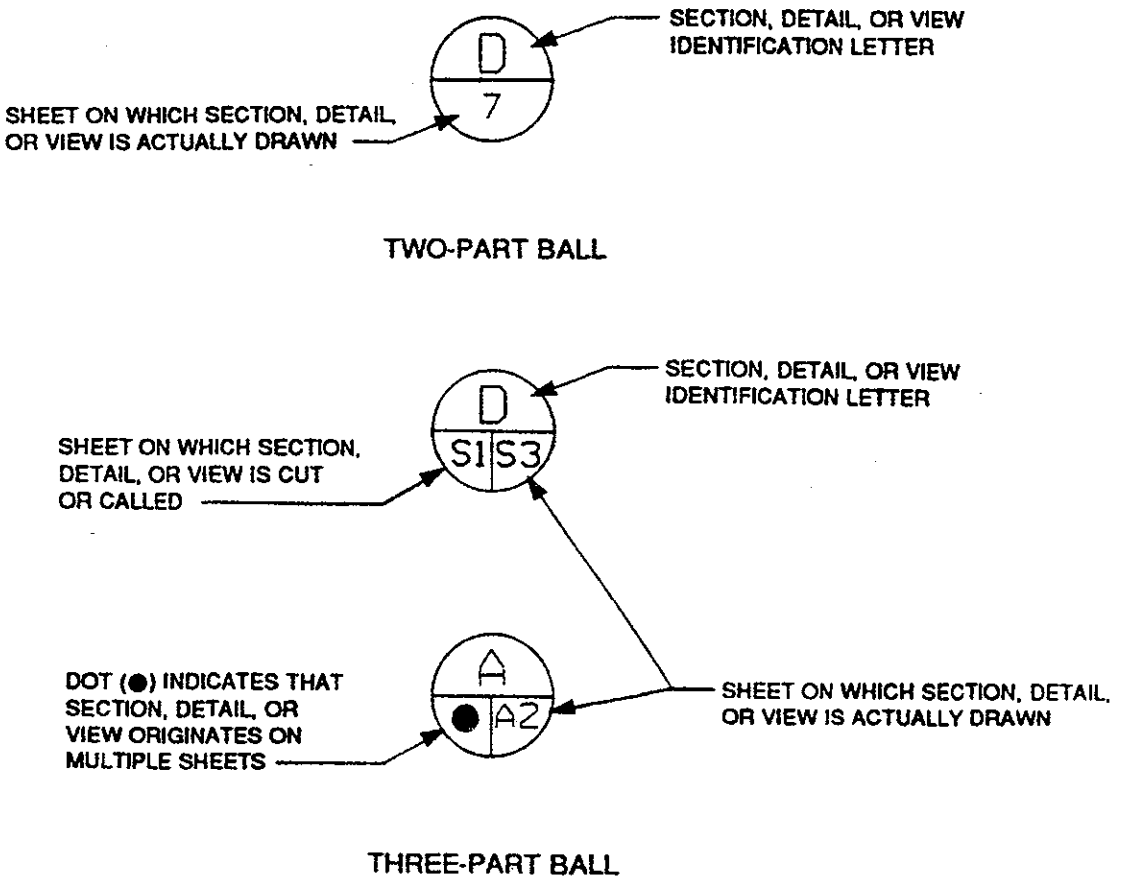

Figure 2-12. Two-Part and Three-Part Ball Callouts

on multiple sheets, a dot may be shown in the lower left quadrant. The number of the sheet on which the section, detail, or view is actually drawn shall be displayed in the lower right quadrant. If the same section, detail, or view is used on multiple sheets, the same identification letter shall be used.

2.19.2 LETTERING. Section detail, and view titles shall be 5-millimeter (3/16-inch) lettering. The section, detail, or view identification letter in the upper half of the ball callout shall also be 5 millimeters (3/16 inch). Lettering for scale descriptions and letters in the lower half of the ball callout shall be 3 millimeters (1/8 inch). (See figure 2-13.)

2.19.3 ARROWS. Directional arrows used in section, detail, or view identifications shall be drawn as either conventional arrows or as triangles. The type selected shall be used consistently throughout the drawing. The two types of arrows are shown in figure 2-14.

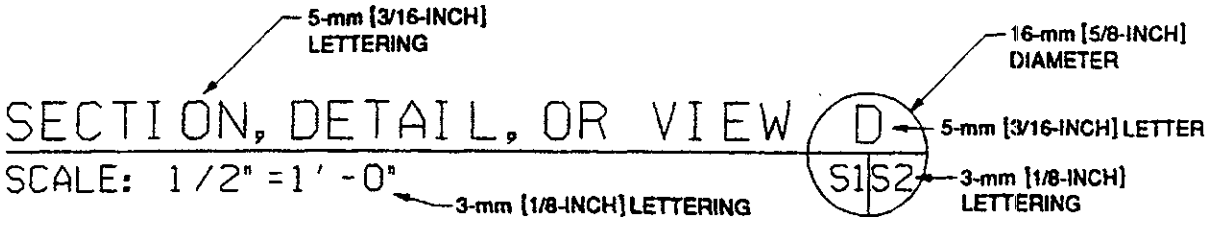

Figure 2-13. Section, Detail, or View Callout Lettering

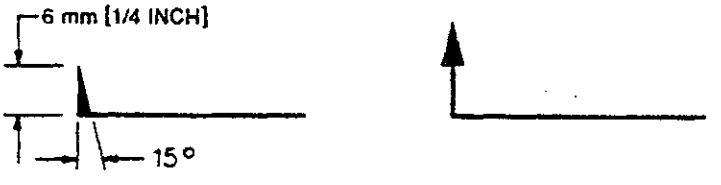

Figure 2-14. Example of Arrows Used in Section, Detail or View Identifications

2.20 LEGIBILITY AND REPRODUCIBILITY

All lines and lettering on facilities drawings shall be of such quality and size as to remain clear and legible when the drawing is reduced to one-half its original size. On drafting film, ink or plastic lead shall be used for drawings. Graphite-based drawing lead shall not be used on KSC drawings. Guidelines for preparation of lines and lettering are given in ANSI Y14.2M and the following paragraphs.

2.20.1 LINES.

2.20.1.1 Line Quality. Lines that are very thin or are not uniformly opaque on the original drawing become ragged in a print made from microfilm and wider or denser portions of lines may increase in width while thinner or less dense portions may disappear completely. Therefore, all lines on a drawing shall be uniformly opaque.

2.20.1.2 Line Width. Since all lines must be uniformly opaque, any desired contrast between object lines and other lines can be obtained only by a variance in the relative width of lines. Relative widths for standard types of lines are shown in figure 2-15.

2.20.1.3 Line Spacing. Lines spaced close together (crosshatching, etc.) have a tendency to flow together on successive generations of microfilm reproductions. For this reason, a minimum spacing of 1.5 millimeters (0.06 inch) between lines shall be maintained.

2.20.2 LETTERING. Lettering size, including hand lettering, template lettering, and computer lettering, shall conform to the minimum sizes listed in table 2-1. Since hand lettering is subject to considerable nonuniformity, well-rounded, clearly defined, and properly spaced lettering is essential. Pinched or curled letters and numerals tend to close in on microfilm images and become illegible or resemble other characters. (See figure 2-16.) A minimum spacing of 2.5 millimeters (3/32 inch) should be maintained between lettering and line work to alleviate bleed in microfilming.

2.20.2.1 Typewritten Lettering. Typewriters that produce 3-millimeter-(0.12-inch-) high, all capital, Gothic type and ten-characters-per-inch spacing may be used for all sizes of drawings. Ribbons must be carefully chosen in order to obtain opaque letters and avoid feathered edges or smudging characteristics. On A-size formats the drawing number may be typed.

2.20.2.2 Preprinted Lettering. Rubber stamps and stickers or appliques shall not be used on engineering drawings.

2.20.3 SIGNATURES AND DATES. In order to obtain legibility, signatures and dates shall be executed with the same care as given to lettering and lines.

2.20.4 SYMBOLS. The same general rules apply to symbols as apply to lines and lettering. Symbols (geometric, tolerance, welding, etc.) shall be shown so that they will be clearly legible when reduced to 1/2 size for reproduction.

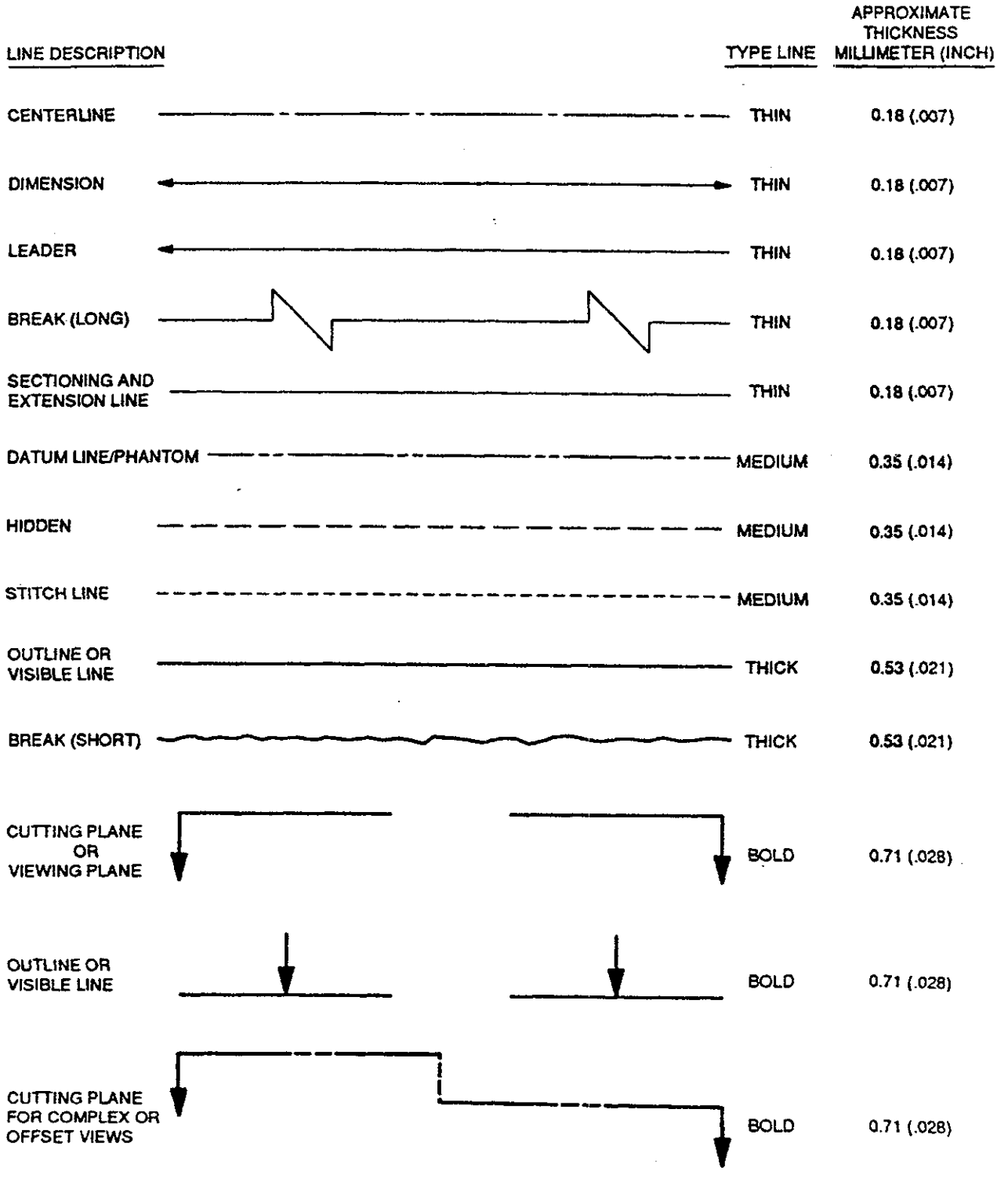

Figure 2-15. Line Standards

Table 2-1. Minimum Letter and Number Sizes on KSC Facilities Drawings

Item on Drawing	Minimum Letter or Number Size		Manual Method
	Drawing Size		
	A and B millimeter (inch)	D, E, F, and J millimeter (inch)	
Drawing number	6.0 (0.25)	6.0 (0.25)	Template
Title	5.0 (0.18)	5.0 (0.18)	Template
Subtitle and view titles	3.0 (0.12)	5.0 (0.18)	Template
Field of drawing notes and revisions	3.0 (0.12)	3.0 (0.12)	Hand
List of notes (heading)	5.0 (0.18)	5.0 (0.18)	Template
Vertical spacing			
Between line of notes	1.5 (0.06)	1.5 (0.06)	
Between notes	3.0 (0.12)	9.0 (0.38)	
Title block entries	3.0 (0.12)	4.0 (0.16)	Hand
Parts list	3.0 (0.12)	4.0 (0.16)	Hand
		3.0 (0.12)	Template
Find number	3.0 (0.12)	3.0 (0.12)	Template
	3.0 (0.12)	4.0 (0.16)	Hand
Reference designator, etc.	3.0 (0.12)	3.0 (0.12)	Template
	3.0 (0.12)	4.0 (0.16)	Hand

Note: Decimal points, dashes, etc., shall be bold and shall be given one full letter space.

CHARACTER	COMMENTS	NOT THIS	POSSIBLE ERROR
A	THE UPPER PART IS LARGE.	A A	
B	THE UPPER PART IS SLIGHTLY SMALLER THAN THE LOWER PART.	B B	
C	THE BODY IS ELLIPTICAL AND THE OPENING FULL.	C	O
D	THE UPPER AND LOWER BARS DO NOT EXTEND BEYOND THE VERTICALS.	D D	O
E	THE SHORT BAR IS ABOVE THE CENTERLINE (NO SERIFS).	E	
F	THE SHORT BAR IS ABOVE THE CENTERLINE (NO SERIFS).	F F	
G	THE SIMPLE BAR IS ABOVE THE CENTERLINE.	G G	C G
H	THE BAR IS ABOVE THE CENTERLINE.	H H	
I	NO SERIFS ARE USED, EXCEPT WHEN THE LETTER "I" AND THE NUMERAL "1" ARE USED TOGETHER IN LETTER-NUMBER COMBINATIONS.	I	
J	THE HOOK IS FULL AND WIDE (NO SERIFS).	J J	
K	THE LOWER BRANCH EXTENDS FROM THE UPPER BRANCH.	K K	
L	NO SERIFS ARE USED.	L	
M	THE CENTER PORTION EXTENDS BELOW THE CENTERLINE, WITH A SLIGHT SLANT ON THE UPRIGHTS.	M M	
N	THE BODY IS WIDE ENOUGH TO AVOID FILL-IN.	N	H
O	THE BODY HAS SUFFICIENT WIDTH FOR CLARITY BUT IS NOT ROUND.	O	Q
P	THE UPPER PART INTERSECTING VERTICAL IS BELOW THE CENTER.	P P	T D
Q	THE BODY IS WIDE AND DISTINCT.	Q	
R	THE UPPER PART IS LARGE, AND THE TAIL IS CONNECTED TO THE UPPER LOOP.	R R	K
S	THE LOWER PART IS LARGE, AND THE ENDS ARE OPEN WITH A SLIGHT ANGLE ON THE CENTER BAR.	S S	8 5

Figure 2-16. Examples of Hand-Lettered Characters (Sheet 1 of 2)

CHARACTER	COMMENTS	NOT THIS	POSSIBLE ERROR
T	THE HORIZONTAL BAR IS FULL WIDTH OF THE LETTER "E."	T	7
U	THE BODY IS FULL WIDTH.	U	V
V	THE POINT IS SHARP.	V	U
W	THE CENTER SECTION EXTENDS ABOVE THE CENTER-LINE. THE BODY IS WIDE ENOUGH TO AVOID BLURRING.	WW	
X	STRAIGHT LINES CROSS ABOVE THE CENTERLINE.	X	
Y	THE UPPER PART IS LARGE AND JOINS BELOW THE CENTERLINE.	YY	
Z	NO SERIFS ARE USED.	Z	
&	DRAW AS SHOWN, IN CLEAR AND PROPER FORM (AMPERSAND).	& &	8
1	DRAW FULL HEIGHT AND HEAVY ENOUGH TO BE IDENTIFIED (NO SERIFS).	1	7
2	THE UPPER SECTION IS CURVED WITH AN OPEN HOOK. THE BOTTOM LINE IS STRAIGHT.	2	8 Z
3	THE UPPER PORTION IS SMALLER THAN THE LOWER PORTION (IT IS NEVER FLAT ON TOP).	3 3	8 5
4	THE BODY IS LARGE AND THE ENDS EXTENDED.	4	7 9
5	THE BODY IS LARGE AND THE CURVE DROPPED TO KEEP THE OPENING LARGE. THE TOP IS FAIRLY WIDE.	5 5	6 S
6	THE BODY IS LARGE AND THE STEM IS CURVED BUT OPEN.	6	8
7	NO SERIF ON THE TOP STRAIGHT LINE.	7 7	1
8	THE LOWER PART IS LARGER THAN THE UPPER PART, AND IS FULL AND ROUND TO AVOID BLURRING.	8 8	B
9	THE BODY IS LARGE AND THE STEM IS CURVED AND OPEN.		
0	THE BODY IS WIDE ENOUGH TO AVOID BLURRING.		

Figure 2-16. Examples of Hand-Lettered Characters (Sheet 2 of 2)

2.20.5 CROSS-SECTION AREAS. Section lines rather than shading shall normally be used when it is necessary to indicate a cross-sectional area. Wide opaque areas do not reproduce on microfilm; therefore, shading over 3 millimeters (1/8 inch) wide shall not be used on A- or B-size drawings. Shading over 6 millimeters (1/4 inch) wide shall not be used on D- and F-size drawings.

2.21 DRAWING NOTES

Drawing notes are pertinent data given in word form and used to complement the delineation of other given data. The arrangement of the notes shall not be interpreted as an order of precedence or sequence in manufacturing, assembly, etc., unless so specified on the drawing.

2.21.1 DRAWING NOTE TYPES. Three types of notes shall be used on facilities drawings: (1) general notes, (2) specific notes, and (3) flag notes. General notes contain information that applies to the whole drawing in general. Specific notes shall be used when referring to parts or details on a specific sheet of the drawing. Flag notes shall be used to note information that pertains to a particular item or circumstance. All drawing notes must be clear and specific to avoid misinterpretation. A description of the types of notes and their usage is given in the following paragraphs.

2.21.1.1 General Notes. General notes are all notes that apply to the entire discipline. General notes shall be on the first sheet of each discipline by a function code, i.e., Civil, Architectural, Structural, Mechanical, Electrical, etc. All general notes shall be numbered in numerical sequence using the format shown in figure 2-17. When a note contains information pertaining to a particular item or circumstance that occurs several times throughout the entire discipline that is identified by a function code, the note shall be added to the list of general notes and the note number placed within a flag. The corresponding note number shall then be placed within a flag in the applicable field of the drawing (see 2.21.1.3).

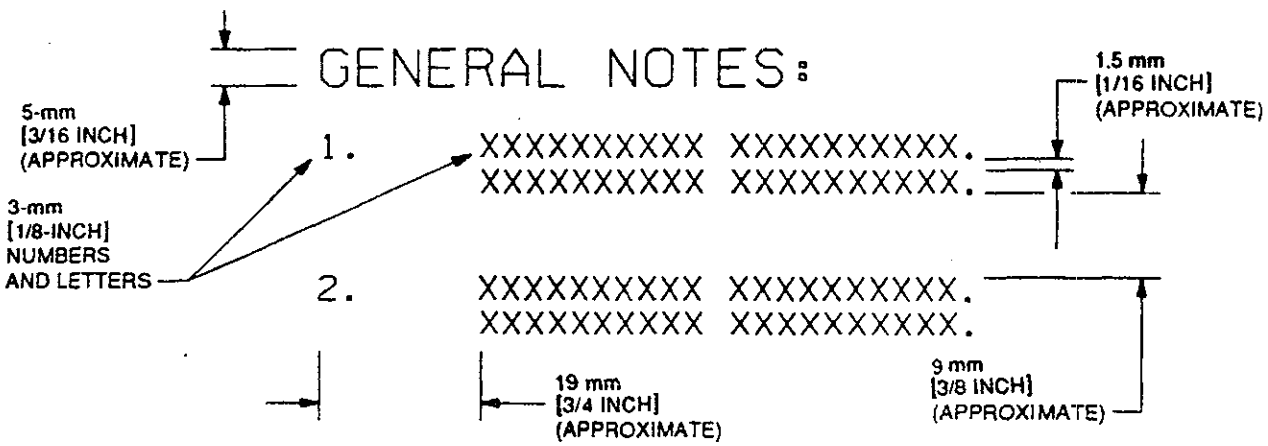

Figure 2-17. Format for List of General Notes

2.21.1.2 Specific Notes. Specific notes shall only be used when they refer to parts or details on a specific sheet of a drawing. Uppercase letters (with the exception of the letters I, O, Q, and X, which shall not be used) shall be used to designate specific notes. All specific notes used shall be on the sheet of the drawing to which they apply and shall be listed in alphabetical order. When a note contains information pertaining to a particular item or circumstance that occurs on a sheet, the note shall be added to the specific notes and the note letter placed within a flag. (See figure 2-18.) The corresponding letter shall then be placed within a flag in the applicable field of the drawing.

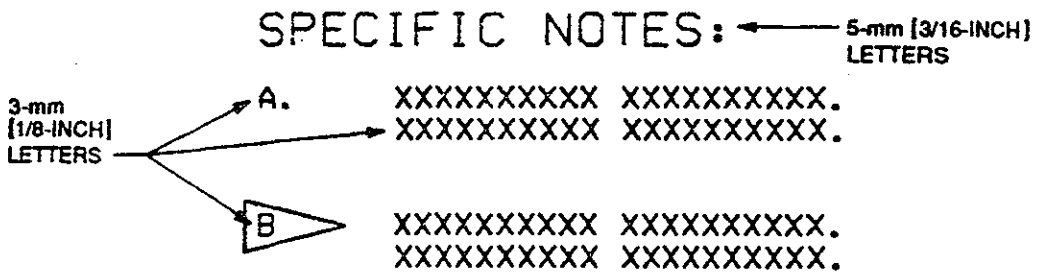

Figure 2-18. Format for List of Specific Notes

2.21.1.3 Flag Notes. When the information in a note pertains to a particular item or circumstance, the applicable note number or letter shall be placed within a triangular flag in the field of the drawing and in the applicable list of notes as described in 2.21.1.1 and 2.21.1.2. When a flag is used, it shall be constructed as shown in figure 2-19.

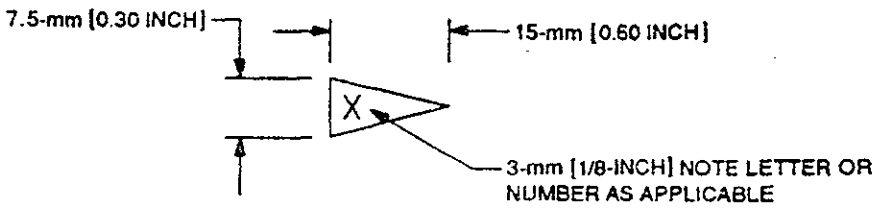

Figure 2-19. Flag Note Size

2.21.2 NOTE LANGUAGE STYLE. The primary consideration on a drawing is its technical essence, presented in language free of vague and ambiguous terms, using the simplest words and phrases that will convey the intended meaning. Inclusion of essential information shall be complete, whether by direct statements or reference to other documents. Consistency in terminology and organization of material will contribute to the drawing's clarity and usefulness. Sentences shall be short and concise. Punctuation must aid in reading and prevent misreading. Well-planned word order requires a minimum of punctuation. When extensive punctuation is necessary for clarity, the sentence(s) shall be rewritten. Sentences with compound clauses shall be converted into short and concise separate sentences.

2.21.2.1 Commonly Used Words and Phrases. Certain words and phrases are frequently used on a drawing. The following rules shall be applied.

a. Reference documents shall be cited as follows:

(1) "conforming to..."

(2) "as specified in..."

(3) "in accordance with..."

In any case, use the same wording throughout the drawing.

b. "Unless otherwise specified" shall be used to indicate an alternative course of action. The phrase shall always come at the beginning of the sentence, and, if possible, at the beginning of the note. This phrase shall be used only when it is possible to clarify its meaning by providing a reference such as another requirement or document.

2.21.2.2 Use of "Shall," "Will," "Should," and "May."

a. "Shall," the emphatic form of the verb, shall be used whenever a requirement is intended to express a provision that is binding.

b. "Will" may be used to express a declaration of purpose on the part of the Government and is used where simple futurity is required for a provision that will be binding.

c. Use "should " and "may" whenever it is necessary to express nonmandatory provisions. "Should" expresses a strong recommendation and "may" expresses allowance for a provision.

2.21.2.3 Indefinite Terms. The terms "and/or," "etc.," "e.g.," and "i.e." shall not be used. On drawings, definite, precise language is imperative. Indefinite terms shall not be used.

2.21.3 NOTE CONTENTS. The following shall be applicable in the preparation/use of notes:

a. General notes shall be numbered consecutively starting with NOTE 1 at the top of the column. Specific notes shall be designated by capital letters listed alphabetically in a separate column starting with NOTE A.

b. Subparagraphs shall be indented and identified by capital letters in alphabetical order for general notes, and by numbers in numerical order for specific notes.

c. Note form requirements shall supplement depiction on drawings where necessary to define the required degree of looseness, tightness, rotation, or extent of travel without bind under spring action, orientation of parts or slots, etc.

d. Filling in voids (open spaces) accommodate deletions and additions is not required and is not preferred.

e. When a note is deleted from a drawing, do not delete the identifying number/letter or renumber/realphabetize notes. Leave the number/letter visible to indicate its previous use and potential future use.

f. Specifications and standards shall be listed without revision level or date.

g. All specifications and standards to be used on drawings shall be reviewed for currency, adequacy, applicability, limitations, and determination of need. Options for class, grade, type, form, etc., and any other options required shall be specified.

h. Notes shall not duplicate information specified elsewhere on the drawing.

i. Where two or more statements are being considered for use in a single note, it is usually better to make each statement in a separate note.

j. Information conveyed by notes shall be accurate, complete, and should have only one interpretation.

k. Any required processes for an item shall be specified in the general notes. The note must be complete and define all of the pertinent variables. The flag symbol shall be used, if necessary, to reference specific locations or restrictions of the process, as related to item configuration.

l. Protective finishes shall be specified in the general notes.

m. Drawings shall contain protective finish requirements consistent with repair part provisioning, with application of additional finishes either at subsequent assemblies (next) or at system level (e.g., finish painting or camouflage painting).

n. Torque requirements for threaded fasteners shown on assembly drawings shall be specified as a general note when necessary.

o. General edge/corner break requirements shall be specified as a general note. Requirements for specific feature(s) shall be shown where applicable in the field of the drawing. If applicable in more than one place, the requirement may be identified with the flag symbol method and specified in the general notes.

Examples: (In general notes)

"ALL EDGES AND CORNERS SHALL BE FREE FROM BURRS."

"ALL EDGES AND CORNERS SHALL BE BROKEN .005 + .010."

"ALL EXTERIOR CORNERS SHALL BE BROKEN R .02 + .02."

" 12 .02 MAX EDGE BREAK."

"ALL INTERIOR CORNERS AND EDGES SHALL BE R .03 + .02."

Examples: (In field of drawing)

12 6 PLACES

12

(6 PLACES)

p. Reference to special drawings or procedures shall be specified as in the following examples:

"FOR SCHEMATIC, SEE DRAWING 79K12345"
"FOR PERFORMANCE REQUIREMENTS, SEE DRAWING 79K12345"

q. Special tools shall be cross-referenced on the drawing of the part and assembly to which the tool applies. Cross-reference shall be by use of a note as in the following example:

"FOR SPECIAL TOOL, SEE DRAWING 79K12345 (REF)"

This cross-reference is required to assure consideration of the tool in the event of a proposed change to the part.

2.21.4 MATERIAL NOTES.

a. Material shall be specified by indicating the basic name, specification, composition, and unified numbering system (UNS) designations as a reference (if the material is listed in SAE HS 1086/ASTM DS-56), e.g., "STEEL, ASTM A108: CF1211 (REF: UNS G12110)." The condition, temper, class, type, grade, etc., shall be specified for material that requires subsequent heat treatment.

   SAMPLE NOTES:

   "STEEL, ASTM A108: CF 1211 THRU 1213 (REF: UNS G12110 THRU G12130)"

   "STEEL, MIL-S-16974:4340 (REF: UNS G43400)"

b. Material requirements and selection shall be listed as a note.

c. Commercial materials shall be specified on drawings only when Government or industry specifications/standards are not available. The commercial material may be defined in specifications prepared in accordance with KSC-STD-P-0005 and that specification shall be used for material requirements.

d. When an item is a casting, it shall be classified in accordance with MIL-STD-2175. A casting classification note, as in the following example, shall be specified on the drawing.

   "CASTING CLASSIFICATION. MIL-STD-2175; CLASS I, GRADE B. RADIOGRAPHIC POSITION REQUIREMENTS SHALL BE IN ACCORDANCE WITH DIAGRAM SHOWN."

e. It is recommended that alternative materials also be specified if available.

2.22 COLUMN GRID SYSTEM

The column grid system as established by the architectural or structural requirements shall be displayed on the plan view drawings of all other disciplines within a drawing package to ensure proper referencing, coordination, etc.

2.23 REFERENCE DIMENSIONS AND NOTES

The use of the term REF or (REF) in conjunction with a dimension or note denotes that the dimension or note is shown for reference purposes only at that location and has no impact or requirement on the contractor with respect to the particular location that the term is used.

For example, a 20'-0" (REF) dimension from center to center of columns may be shown on a detail of a pipe support. The use of (REF) indicates that the 20'-0" dimension is not the responsibility of the pipe support contractor, but is shown for reference and coordination purposes only. This 20'-0" dimension shall be shown on the architectural and structural drawings without the use of (REF) and is the responsibility of the architectural and structural contractors.

2.24 DRAWING CHECKING

Drawing checks shall be required for the production of error-free engineering drawings. Some guidelines for checking drawings are given in the following paragraphs. The items listed herein are not intended to be a complete checklist for drawing checks but rather a list of those items that are usually found to contain errors during the final checking process. The drawing check shall ensure that items on a drawing are in accordance with the requirements specified in volume II of this manual.

2.24.1 QUALITY. To ensure the quality of a drawing, the following items shall be checked:

a. General appearance is good.

b. Line density and spacing is proper.

c. All arrowheads are shown.

d. Lettering is proper size and not crowded.

e. All erasures and corrections are properly made.

f. Drawing material is undamaged.

2.24.2 TITLE BLOCKS. To ensure the completeness of the title block, the following items shall be checked:

a. A&E name and address is shown.

b. Title is correct.

c. Sheet numbering is correct.

d. Drawing number is properly entered.

e. Scale is shown.

f. Functional code is specified.

g. Revision letter is specified

h. Dates are correctly entered.

i. Required approval signatures are entered.

2.24.3 DRAWING PRACTICES. To ensure proper drawing practices have been followed, the following items shall be checked:

a. Notes are correctly located and information is clearly conveyed.

b. Abbreviations are correct.

c. Spelling is correct.

d. All items or assemblies are identified.

e. Symbology is correct.

f. Security classification and notes are properly located.

2.24.4 REVISIONS. Sheets modified by a revision shall be checked as follows:

a. All sheets modified by a revision.

(1) Revision block is properly completed.

(2) All revisions are entered in the revision block identified on the field of the drawing.

b. First sheet of a revised drawing.

(1) Drawing index shows all revised sheets.

(2) Revision block has identified all revised, deleted, or added sheets.

(3) Revision block has identified all engineering orders (EO's) incorporated by the revision.

SECTION III

DRAWING FORMAT

3.1 SIZE, FORMAT, TITLE BLOCK, AND MATERIAL

John F. Kennedy Space Center (KSC) engineering drawings shall be prepared on KSC drawing formats. The drawings shall conform to the instructions for format completion as detailed in the following paragraphs and the instructions for entries, drawing preparation, and notations as detailed in section II. Table 3-1 lists nonmetric preprinted forms of the required formats and contains information pertinent to all sizes of finished formats. See 3.8 regarding equivalent metric drawing sheet sizes.

Table 3-1. Drawing Format List

Size Letter	Width (inches)	Length (inches)	Margin (inch)	KSC Form Number
A	11	8-1/2	3/8	21-2C
A	11	8-1/2	1/4	1-7
B	11	17	3/8	1-8
C	17	22	1/2	1-9
D	22	34	1/2	1-10
F	28	40	1/2	1-11
F	28	40	1/2	1-11A

3.2 PREFERRED FORMATS

Facilities drawings shall be prepared on the drawing format that best suits the scope and intent of the design drawing. The A-size format is preferred for specifications and other text or tabular design data. The preferred format for construction, installation, and operations and maintenance documentation (OMD) is the F-size format as shown in table 3-1.

3.2.1 ZONING OF DRAWINGS. All KSC drawing formats, with the exception of sizes A and B, shall be zoned. When zone markings are not preprinted on existing formats, zone areas shall be added as illustrated in figure 3-1. Vertical zones shall be uniformly spaced and identified alphabetically from the bottom of the drawing, and horizontal zones shall be

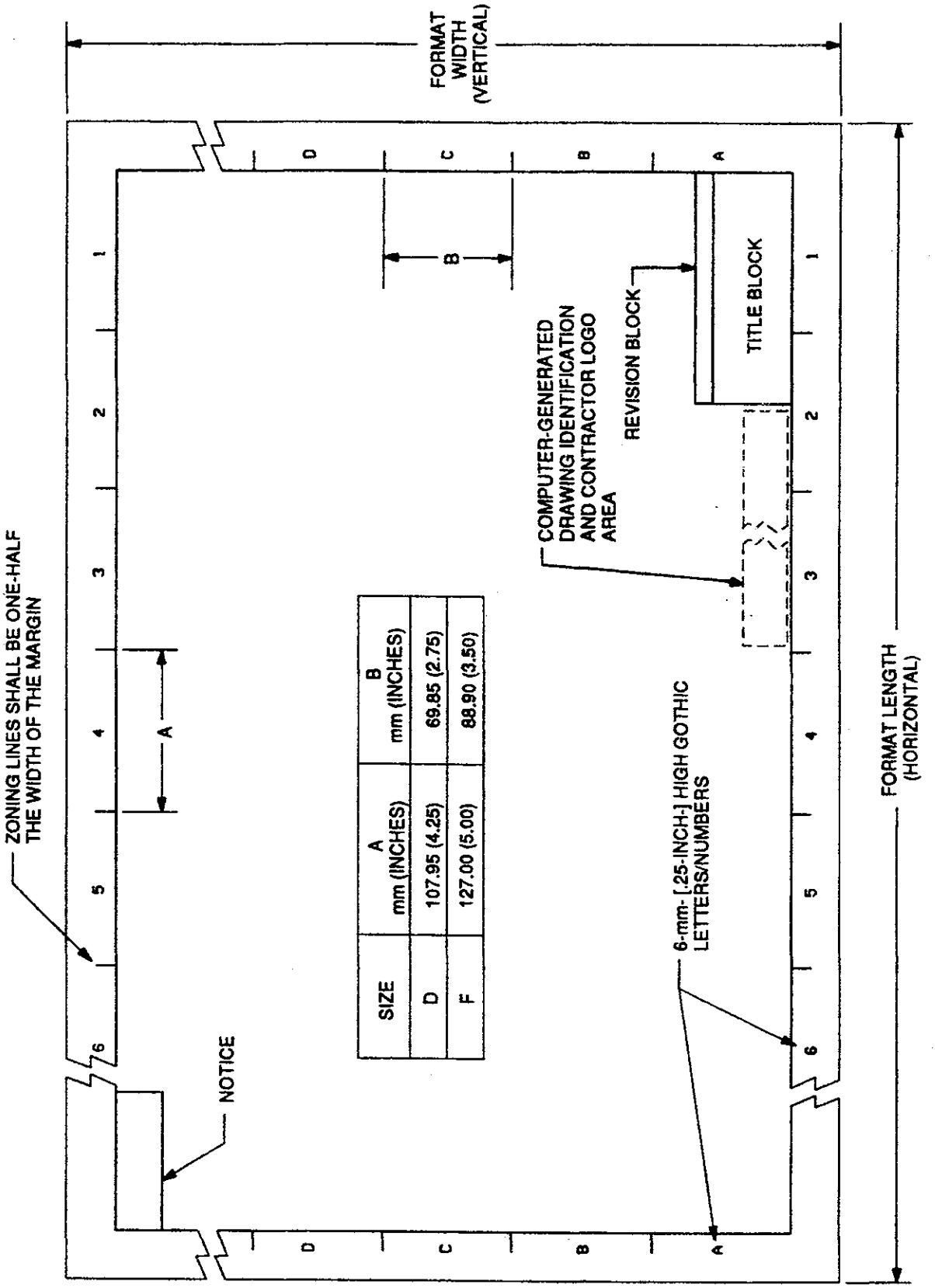

SIZE	A mm (INCHES)	B mm (INCHES)
D	107.95 (4.25)	69.85 (2.75)
F	127.00 (5.00)	88.90 (3.50)

Figure 3-1. Drawing Zones

uniformly spaced and identified numerically beginning at the right-hand edge of the drawing. (See figure 3-1.)

3.2.2 MICROFILMING ALIGNMENT ARROWHEADS. Alignment arrowheads shall be used on all drawings. When they are not preprinted, arrowheads shall be entered in the margin of the basic format as illustrated in figure 3-2.

3.3 SECURITY CLASSIFICATION AND NOTATION

The security classification and notation shall be shown on all drawings warranting a security classification in accordance with DOD 5220.22-M and as specified in DOD-STD-00100D (AR), Appendix B.

3.4 NOTICE

The following notice shall be located in the upper left corner of the drawing format as indicated in figure 3-1.

> NOTICE - When Government drawings, specifications, or other data are used for any purpose other than in connection with a definitely related Government procurement operation, the United States Government thereby incurs no responsibility nor obligation whatsoever; and the fact that the Government may have formulated, furnished, or in any way supplied the said drawings, specifications or other data is not to be regarded by implication or otherwise as in any manner licensing the holder or any other person or corporation, or conveying any rights or permission to manufacture, use, or sell any patented invention that may in any way be related thereto.

3.5 KSC CONTRACTOR DRAWING FORMATS

Contractors that produce drawings for NASA KSC shall use the drawing formats specified in this section. In addition to these requirements, the contractor may add the company name and/or logo immediately above the title block of an A-size format, KSC Form 21-2C, or immediately to the left of the title block on other formats.

3.6 PREPRINTED DRAWING FORMAT MATERIALS

Preprinted A-size drawing formats shall be printed on translucent bond paper conforming to UU-P-561. All drawing formats other than A-size shall be preprinted on plastic tracing sheets with a glazed matte finish conforming to L-P-519.

3.7 COMPUTER-GENERATED DRAWING FORMATS AND MATERIALS

Computer-generated drawing formats shall comply with the requirements specified in this section. In addition to these requirements, each computer-generated drawing format shall have

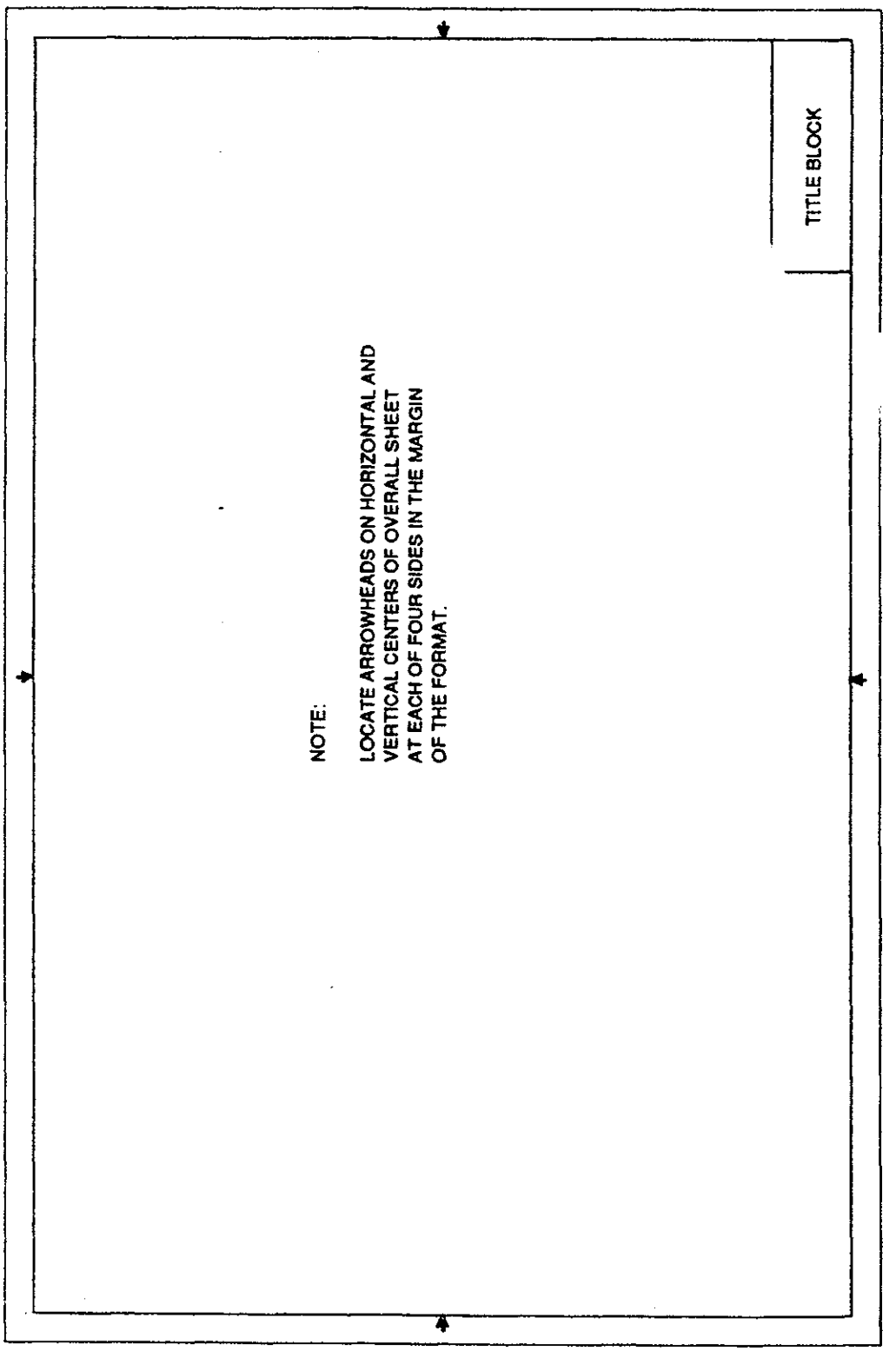

Figure 3-2. Alignment Arrowheads

a computer-generated drawing identification area (see figure 3-1). The identification shall contain the file name or address of the drawing and the computer system from which the drawing was generated. Computer-generated drawings and formats may be printed on paper, conforming to UU-P-561, or plastic tracing sheets, conforming to L-P-519.

3.8 METRIC-SIZE PAPER

The international standard paper sizes in the A series best correspond to standard drawing sizes in U.S. Customary Units. The A series is based on a width-to-length proportion of 1 to 2 in the same manner as the A-, B-, C-, D-, and E-size formats. The relationships between the A-series sizes and the customary sizes are shown in table 3-2. The margins defined in table 3-1 will produce net drawing areas that are within the sheet sizes of both standards, so drawings may satisfactorily be reproduced on either customary or international sheet sizes by contact printing and microfilm projection methods. There is no corresponding size for the customary F-size sheets in the international A series. The soft conversion of this customary size may be used and is also shown in the table.

Table 3-2. Comparison of International and U.S. Customary Drawing Sizes

International Designation	Width mm (in)	Length mm (in)	Nearest U.S. Customary Size	
			Letter	Size (in)
A4	210 (8.27)	297 (11.69)	A	8.5 x 11.0
A3	297 (11.69)	420 (16.54)	B	11.0 x 17.0
A2	420 (16.54)	594 (23.39)	C	17.0 x 22.0
A1	594 (23.39)	841 (33.11)	D	22.0 x 34.0
A0	841 (33.11)	1189 (46.81)	E	34.0 x 44.0
	711	1016	F	28.0 x 40.0

SECTION IV

DRAWING TITLES AND IDENTIFICATION

4.1 SCOPE

This section establishes and defines the requirements for the creation of drawing titles and identification of the drawings for facilities drawings prepared by or for the John F. Kennedy Space Center (KSC), NASA.

4.2 TITLE REQUIREMENTS

The drawing title shall be clearly identified in order to distinguish it from other similar drawings or facilities. The drawing title shall be written in all capital letters. The title of a drawing shall consist of the different parts described in the following paragraph. (See figure 4-1.) The location, basic name, and description shall be the same on all sheets of the drawing.

4.2.1 LOCATION. The first part of the drawing title shall consist of the location description (e.g., Launch Complex 39). For a location outside of KSC, the installation shall be identified first and then the area within the installation (e.g., Vandenberg Air Force Base, Space Launch Complex 6).

4.2.2 BASIC NAME. The basic name shall be a noun or noun phrase. This identifying noun or noun phrase shall establish the basic description of the facility (e.g., Vehicle Assembly Building) and shall be the second part of the drawing title.

4.2.3 DESCRIPTION. The third part of the drawing title shall consist of a noun or noun phrase that gives an overall description of the project or drawing (e.g., piping, cabling, and equipment installation modifications to OMS access platform, etc.).

4.2.4 SUBTITLE. Noun or noun phrase modifiers that indicate the system or specific features shall be shown, as required, to complete the description of the engineering data shown on the drawing sheet.

4.3 IDENTIFICATION REQUIREMENTS

All facilities engineering drawings and specifications shall be assigned identification numbers in conformance with the requirements specified in this section.

4.3.1 DRAWING NUMBER. A drawing number shall not exceed 15 characters. These characters include numbers, letters, and dashes, with the following limitations:

a. The letters I, O, Q, and X shall not be used.

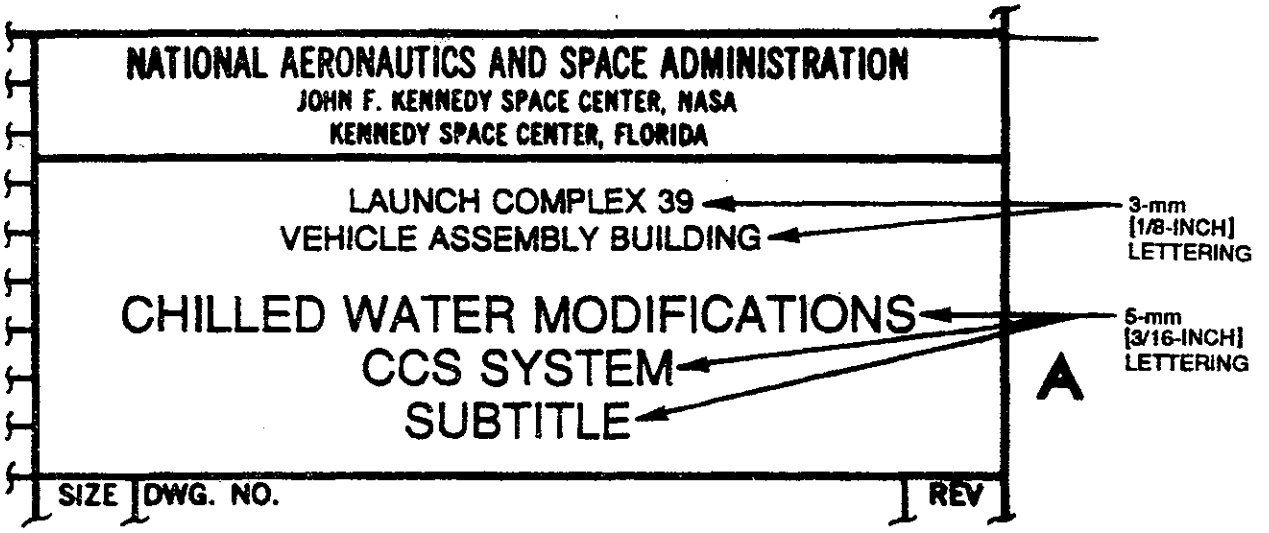

Figure 4-1. Typical Facilities Drawing Title

b. Numbers shall be Arabic numerals. Fractional, decimal, and Roman numerals shall not be used.

c. Blank spaces are not permitted.

d. Symbols, such as parentheses (), asterisk *, virgule /, degree °, plus +, and minus -, shall not be used, except when referencing the Government or non-Government standardization document whose identification contains such a symbol.

e. The CAGE code, the letter designating the drawing format size, and the drawing revision letter are not considered part of the drawing number.

f. Vendor/manufacturer drawing numbers are exempt from the provisions of this paragraph.

A typical example of a drawing number is 79K12345.

4.3.2 RECORDS. Drawing numbers shall be allocated or assigned by the appropriate documentation center. The documentation center shall keep a complete and accurate record of drawing numbers.

4.3.3 TRANSFERRING DESIGN RESPONSIBILITY TO ANOTHER ORGANIZATION. When the design responsibility for engineering drawings is transferred from one design organization to another, the drawing number and drawing original shall be transferred to the new design organization's documentation center for administration.

SECTION V

CIVIL DRAWINGS

5.1 SCOPE

This section defines the civil drawings normally prepared by or for the John F. Kennedy Space Center (KSC), NASA, and identifies the requirements for preparing these drawings.

5.2 DEFINITION OF CIVIL DRAWINGS

Civil drawings are graphic and symbolic representations of existing and/or planned surface features of a region showing the necessary construction required to develop a site. Natural and manmade features or objects such as hills, valleys, streams, swamps, buildings and structures, power transmission lines, railroads, etc., indicating their geometric configuration and physical relationship to other structures and boundary lines are shown. Certain important imaginary lines such as lines of sight, state, community, and property boundaries, zoning boundaries, building setbacks, coordinate grid system, etc., are also indicated for record and reference purposes. Drawings depicting structure location, grading, roads and paving, underground piping, and yard structures are included in the general planning and layout of construction required to develop a site.

5.3 TYPES OF CIVIL DRAWINGS

Civil drawings are classified into the following general types:

a. Preliminary field investigation and study drawings

b. Topographic maps

c. Master plan drawings

d. Plot or site plan drawings

e. Excavation plan drawings

f. Finish-grading drawings

g. Plan and profile drawings

h. Road and paving drawings

5.4 PRELIMINARY FIELD INVESTIGATION AND STUDY DRAWING

5.4.1 DEFINITION. A preliminary field investigation and study drawing is a drawing delineating applicable engineering information, criteria, and data required for early evaluation in determining the adequacy and feasibility of a site to accommodate planned facilities. (See figure 5-1.) This type drawing is generally used for study, evaluation, and/or presentation and precedes construction drawings.

5.4.2 REQUIREMENTS. The following requirements shall apply to the preparation of a preliminary field investigation and study drawing.

a. A coordinate grid of horizontal and vertical lines accurately plotted to scale and identified shall be shown and used as a basis to locate all features. (See figure 5-1.)

b. An appropriate scale between 1:200 and 1:2000, such as 1 millimeter equals 1 meter, 1 inch equals 100 feet, 1 inch equals 200 feet, etc., shall be used.

c. Boundary limits and/or property lines shall be shown. Contours, sufficient for planning purposes, shall be shown using a solid line and their elevations shall be indicated. Every fifth contour line shall be indicated by using a thicker line than the other four.

   Examples:

   For a 1-meter (foot) interval, the 5-meter (foot), 10-meter (foot), 15-meter (foot), etc., coutour line shall be thicker than the other four. For a 5-meter (foot) contour interval, the 5-meter (foot), 25-meter (foot), 50-meter (foot), etc., contour line shall be thicker. (See figure 5-1.)

d. Highways, including route numbers, shall be shown. Railroads and navigable waters shall be indicated, as applicable. Where feasible, distances to major cities shall be indicated.

e. North arrows for orientation shall be shown with a simple and effective representation

f. Subsurface soil boring data shall be recorded. Each soil boring shall be located and numbered. The number and location shall be taken from the soil boring logs or a recorded subsurface investigation report. (See figure 5-2.)

g. Natural site features, such as streams, swamps, woods line, rock outcroppings, sinkholes, flood levels, etc., shall be shown.

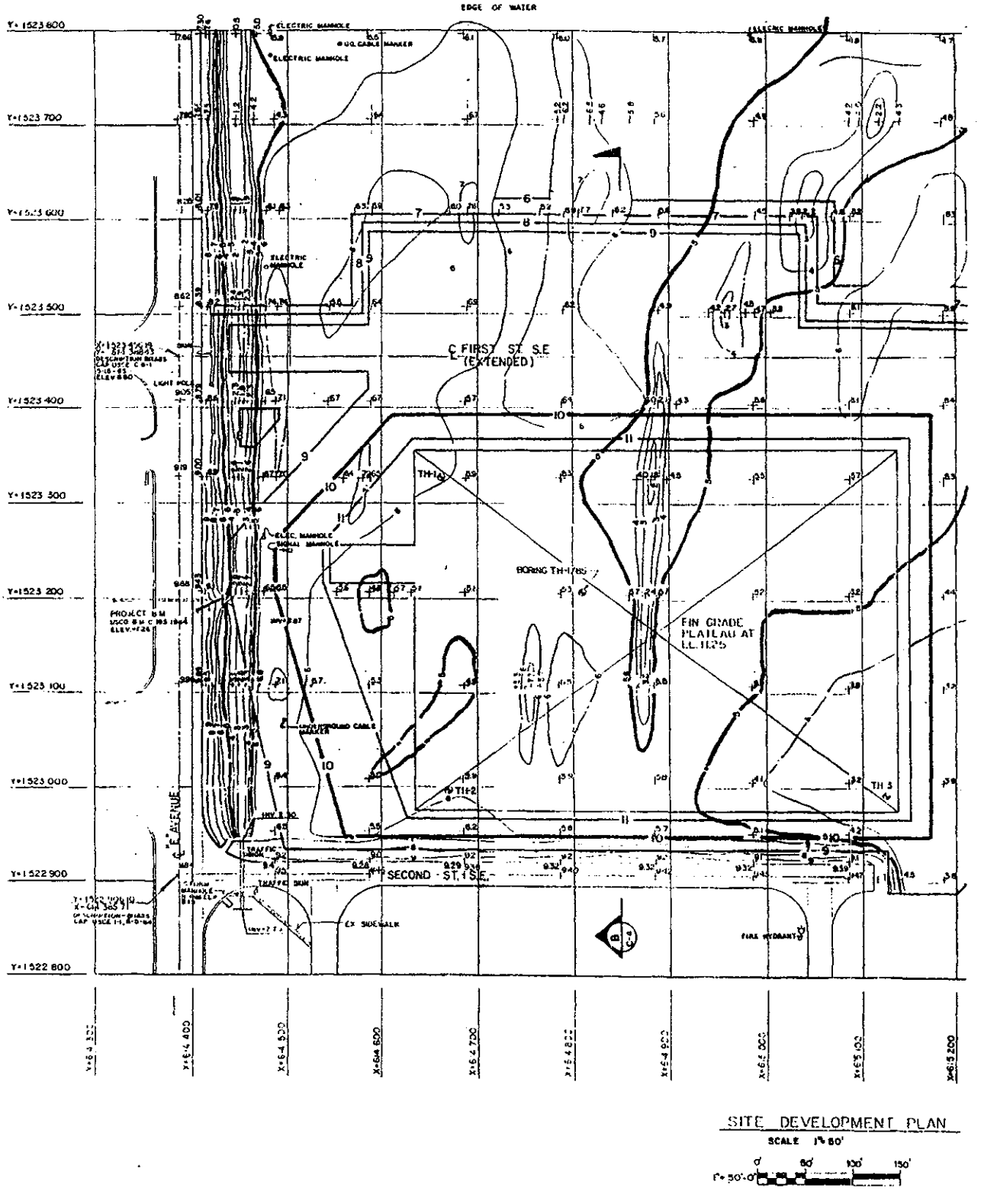

Figure 5-1. Preliminary Field Investigation and Study Drawing

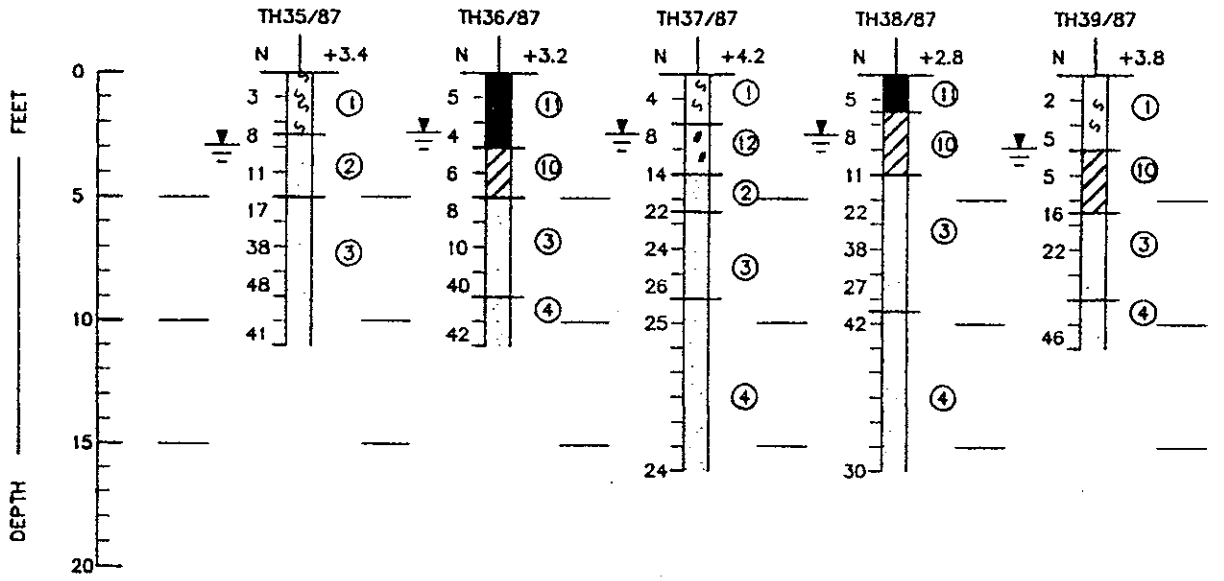

SOIL LEGEND

- ① DARK GRAY FINE SAND WITH TRACE OF ROOTS
- ② BROWN SLIGHTLY SILTY FINE SAND
- ③ LIGHT GRAY SLIGHTLY SILTY FINE SAND & FINELY BROKEN SHELL
- ④ GRAY FINE SAND AND FINELY BROKEN SHELL
- ⑨ DARK REDDISH BROWN SLIGHTLY SILTY FINE SAND (HARDPAN)
- ⑩ GRAY AND BROWN FINE SANDY CLAY
- ⑪ DARK BROWN HIGHLY ORGANIC CLAY WITH FINE SAND (MUCK)
- ⑫ BROWN SILTY FINE SAND WITH CEMENTED ROCK LAYERS
- ⑬ BROWN FINE SANDS WITH OCCASIONAL SLIGHTLY SILTY SEAMS
- ⑭ GRAY FINE SANDS WITH TRACES OF ROOTS
- ⑮ DARK GRAY SLIGHTLY SILTY TO SILTY FINE SANDS WITH TRACES OF ROOTS
- ⑯ DARK BROWN SILTY VERY FINE SANDS
- ⑰ GRAY FINE SANDS WITH BROKEN SHELL
- N STANDARD PENETRATION IN BLOWS PER FOOT
- ▼ GROUNDWATER TABLE: AUGUST 26, 27, 28, 29 AND 31, 1987 (TH1/90& 2/90 – DATE: 5/2/90)
- +4.2 GROUND SURFACE ELEVATION ABOVE MEAN SEA LEVEL

NOTES:

1. THE BORING LOGS ARE PREPARED FROM THE DATA AND REPORT PREPARED BY ARDAMAN & ASSOCIATES, INC. DATED SEPTEMBER 1987 AND MAY 1990.
2. THE BORING LOGS AND RELATED INFORMATION REPRESENT ARDAMAN & ASSOCIATES, INC. INTERPRETATION OF THE SUBSURFACE CONDITIONS AT THE DESIGNATED BORING LOCATION ONLY AND ON THE PARTICULAR DATE DRILLED.

Figure 5-2. Typical Core Boring Log

h. All legal limitations to the use of the site for construction of proposed facilities, such as road, railroad, or utility easements, zoning restrictions, building setback requirements from roads or property lines, building height restrictions, etc., shall be noted or shown, as required.

i. The initial, and where known, the planned or proposed facilities requirements, including roads, utilities, waste treatment areas, etc., shall be shown using a dashed line.

j. The utility requirements of the initial and future stages of construction for the facilities shall be shown including the size, availability, and connections to existing utilities such as water lines, storm and sanitary sewers, gas lines, electric lines, etc.

k. Line-of-sight requirements will be obtained from Master Planning and shown if they exist.

5.5 TOPOGRAPHIC MAP

5.5.1 DEFINITION. A topographic map depicts the existing surface terrain including the geographical positions of natural features as well as manmade works and structures. A topographic map is used for estimating, planning, site study, and construction purposes. (See figure 5-3.)

5.5.2 REQUIREMENTS. The following requirements shall apply to the preparation of a topographic map.

a. Contours of the terrain shall be shown using a solid line. The contour interval shown shall be governed by the purpose of the drawing; for example, if a detailed study is required, 1-meter (foot) contour intervals may be shown. Each contour shall bear its elevation in meters (feet), repeated along its length if necessary for interpretation. (See figure 5-1.)

b. When feasible, U.S. Coast and Geodetic Survey topographic sheets may be converted to official drawings and utilized as topographic maps.

c. North arrows for orientation shall be shown with simple and effective representations.

d. A coordinate grid shall be shown from which all features are located.

e. Test wells, soil core borings, reference to field books, location of buildings and utilities, etc., shall be shown as required.

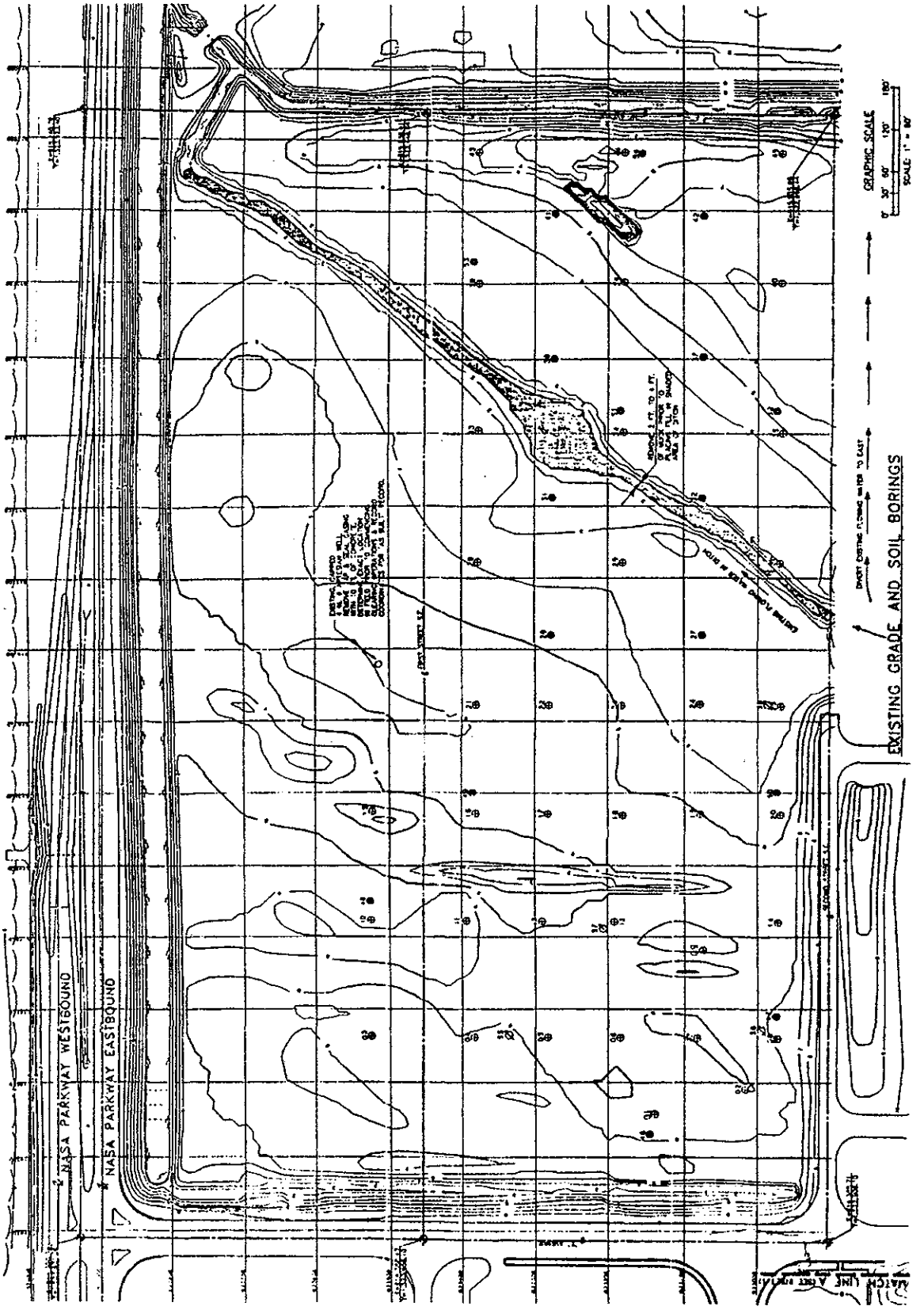

Figure 5-3. Topographic Map

5.6 MASTER PLAN DRAWING

5.6.1 DEFINITION. A master plan drawing shows the limits of features, manmade and natural, of an entire complex or site. (See figure 5-4.) It primarily depicts significant surface features of the site topography such as boundary lines, buildings and structures, roads, walkways, parking areas, fences, pools, etc. The master plan presents the entire complex or site on one drawing. Various phases of construction may be defined, including plans for future construction. When feasible, a master plan drawing shall be referenced to plot plans, vicinity plans, and other drawings, as required, for particular detail.

5.6.2 REQUIREMENTS. The following requirements shall apply to the preparation of a master plan drawing:

a. A coordinate grid shall be shown. (See figure 5-1.)

b. A scale appropriate to delineate the requirements, such as 1 millimeter equals 1 meter, 1 inch equals 100 feet, 1 inch equals 200 feet, etc., shall be used and a scale shall be included on the drawing.

c. Boundary limits and property lines shall be shown.

d. Highways, including route numbers, shall be shown. Railroads and navigable waters shall be indicated.

e. Natural site features, such as streams, swamps, woods line, rock outcroppings, sinkholes, flood levels, etc., shall be shown.

f. All legal limitations to the use of the site for construction of proposed facilities, such as roads, railroads, or utility easements, zoning restrictions, and building setback requirements from roads or property lines, shall be noted or shown.

g. All onsite access or service roads and main utilities shall be shown.

h. A solid line shall be used to indicate existing construction, and a dashed line shall be used to indicate proposed construction.

i. Line-of-sight restrictions shall be shown.

5.7 PLOT OR SITE PLAN DRAWING

5.7.1 DEFINITION. A plot plan drawing is a drawing that shows surface features, the location of structures, a facility, or a group of facilities on a site. (See figure 5-5.) The delineation of the drawing shall incorporate symbols, conventions, dimensions, notes, etc., in locating such facilities and utilities as buildings, roads, walks, tile fields, pools, walls, electric

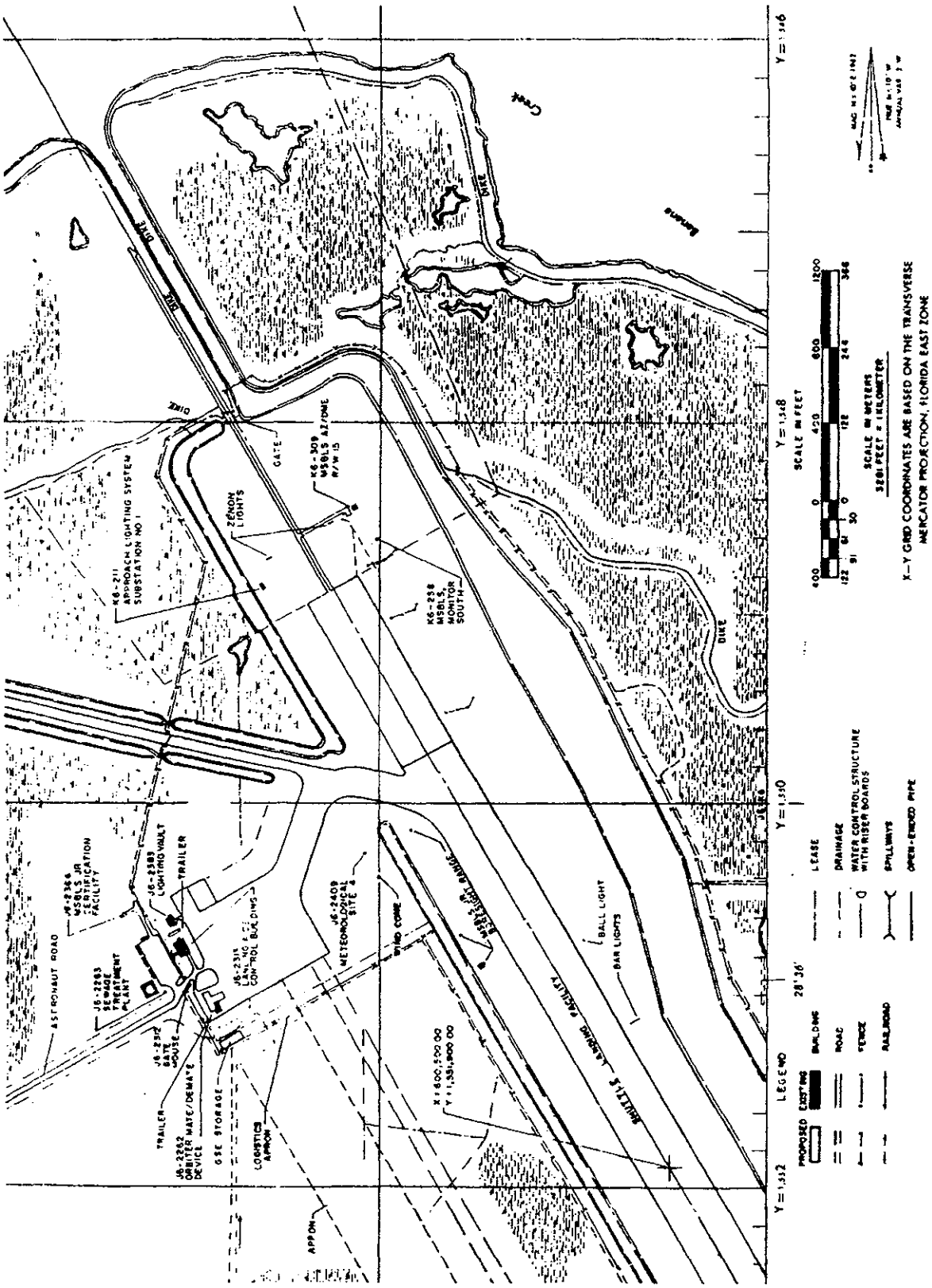

Figure 5-4. Master Plan

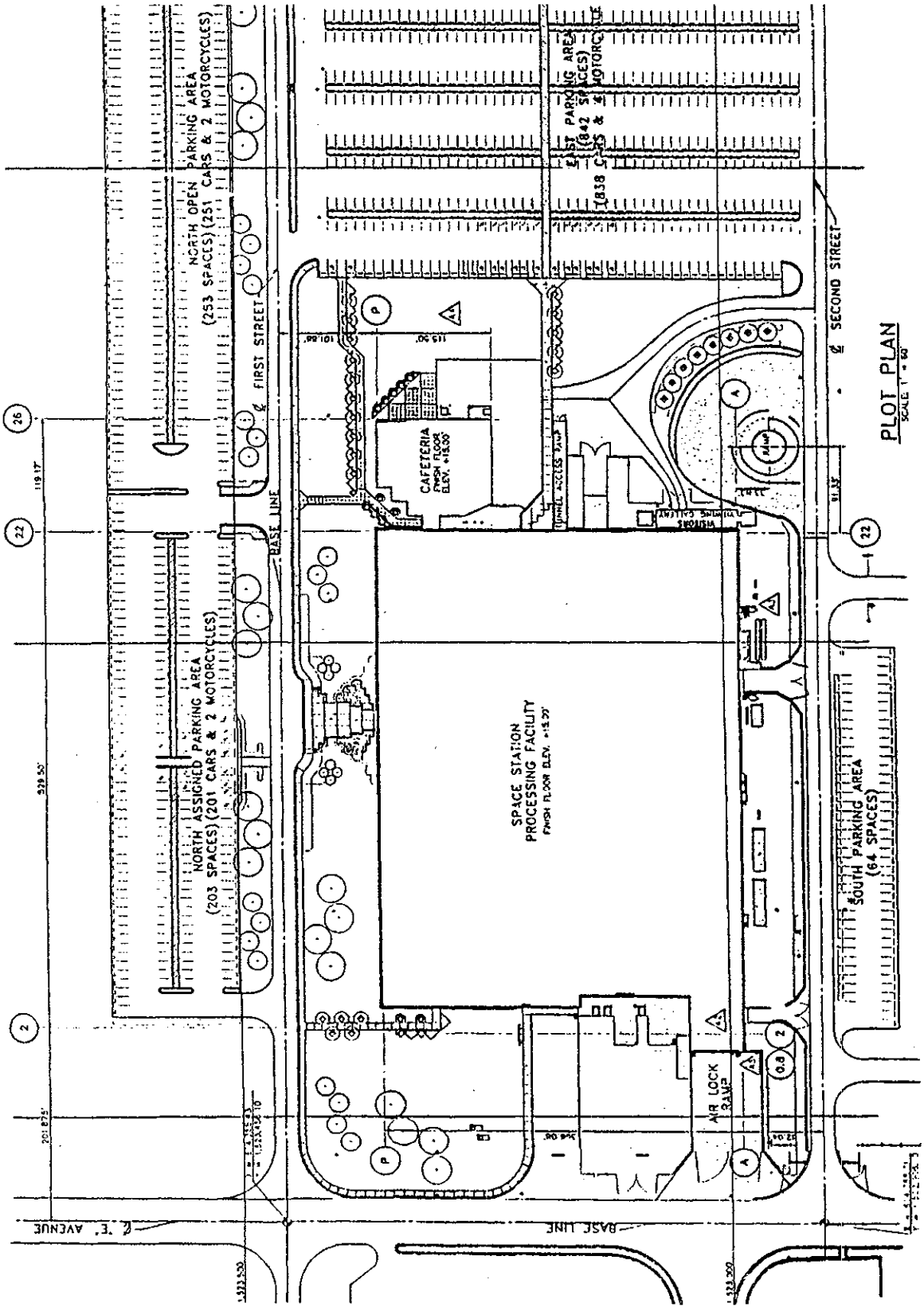

Figure 5-5. Plot or Site Plan Drawing

transmission lines, pipe lines, etc., in respect to a coordinate grid system or other identificable objects such as bench marks or reference points.

5.7.2 REQUIREMENTS. The following requirements shall apply to the preparation of a plot plan drawing:

a. A scale appropriate to delineate the requirements, such as 1 millimeter equals 1 meter, 1 inch equals 50 feet, 1 inch equals 100 feet, etc., shall be used. A graphic scale shall be included on the drawing.

b. A coordinate grid system may be placed on the drawing. (See figure 5-1.)

c. Boundary limits and/or property lines shall be shown.

d. Natural features, such as streams, swamps, woods line, flood levels, sinkholes, etc., may be shown.

e. New construction, both above and below ground, shall be shown using a solid line. The coordinated location of each shall be given. See figure 5-1 for method of giving coordinated location.

f. Utility connections, such as water, sewer, electric power, etc., shall be shown and referenced to their appropriate drawings.

g. Existing facilities shall be shown using a phantom line.

h. North arrow indication shall be shown with a simple and effective representation.

i. Reference to vicinity map and other applicable documents shall be made, when required, to complement delineated information.

j. Whenever more than one plot plan is required, a key reference plan, defining the areas and their relationship with the site, shall be employed.

5.8 EXCAVATION PLAN DRAWING

5.8.1 DEFINITION. An excavation plan drawing is a drawing that shows the amount of earth to be removed or relocated and conditions governing the removal of such earth. (See figure 5-6.)

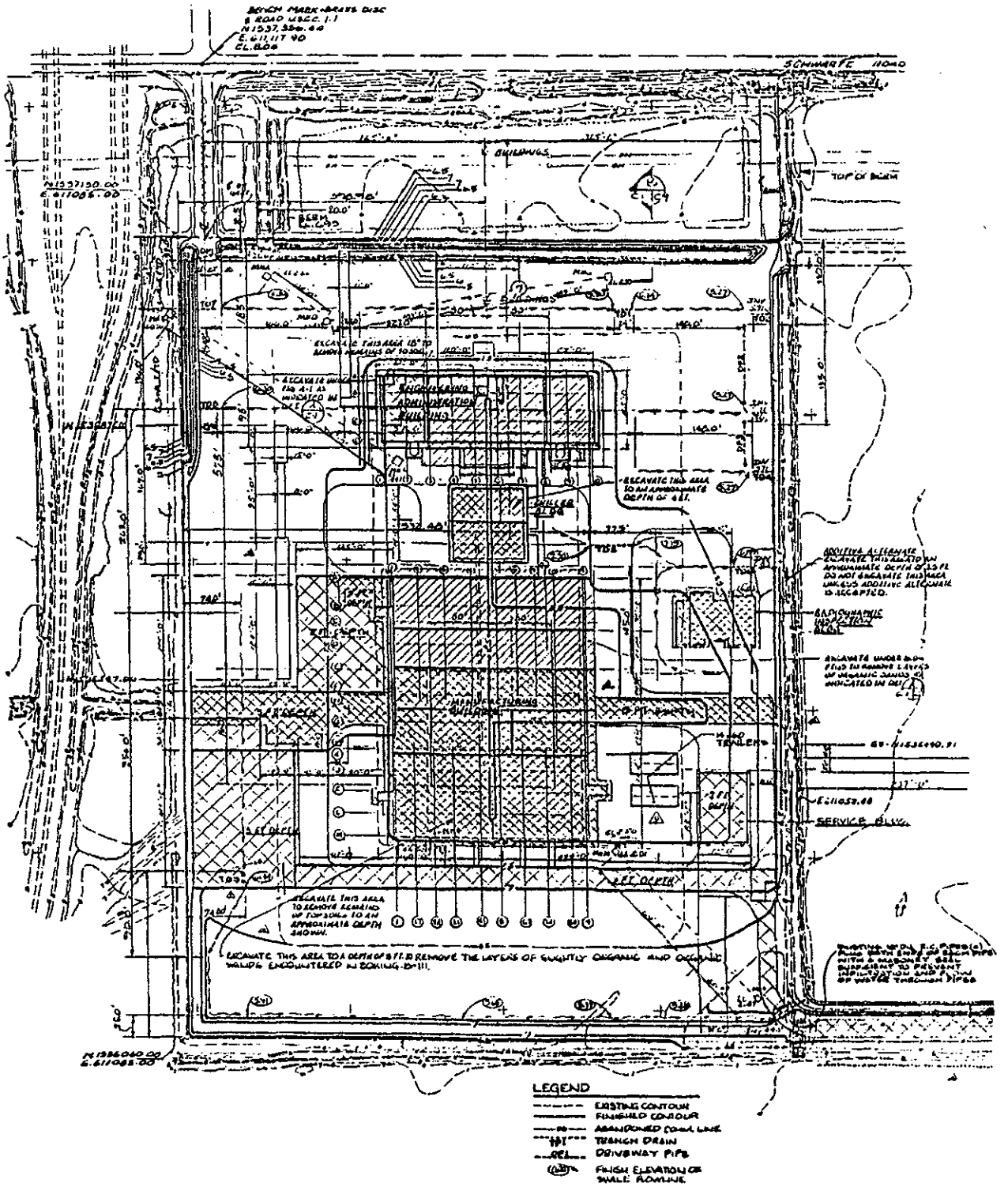

Figure 5-6. Excavation Plan

5.8.2 REQUIREMENTS. The following requirements shall apply to the preparation of an excavation plan drawing:

a. A scale or scales appropriate to delineate the requirements shall be used. When sections are required, an exaggerated vertical scale may be used, in which case both scales used shall be listed below the section, thus:

SECTION D
SCALE: HORIZ. 1 mm = 5000 mm
VERT. 1 mm = 500 mm

b. A coordinate grid system shall be placed on the drawing.

c. Buildings and utilities, both above and below ground, shall be shown. Existing facilities shall be shown using a phantom line. Relocation of existing facilities, where they interfere with the excavation, shall be shown.

d. Limits of excavation, including top and toe of each slope, shall be given.

e. Slopes of sides shall be given.

f. The piling requirements and other stabilization methods shall be specified, when required.

g. North arrow for orientation shall be shown with a simple and effective representation.

h. Reference shall be made to the plot plans and other applicable drawings.

i. Turbidity and erosion control devices shall be shown.

5.9 FINISH - GRADING DRAWING

5.9.1 DEFINITION. A finish grading drawing depicts the ground surface before and after facilities are built. (See figure 5-7.) Whenever the ground surface is altered by construction, a finish-grading drawing shall be prepared to show drainage, access, and final elevations of the ground. Finish-grading may be combined with a plot plan when finish-grading requirements will not interfere with the clarity of the plot plan.

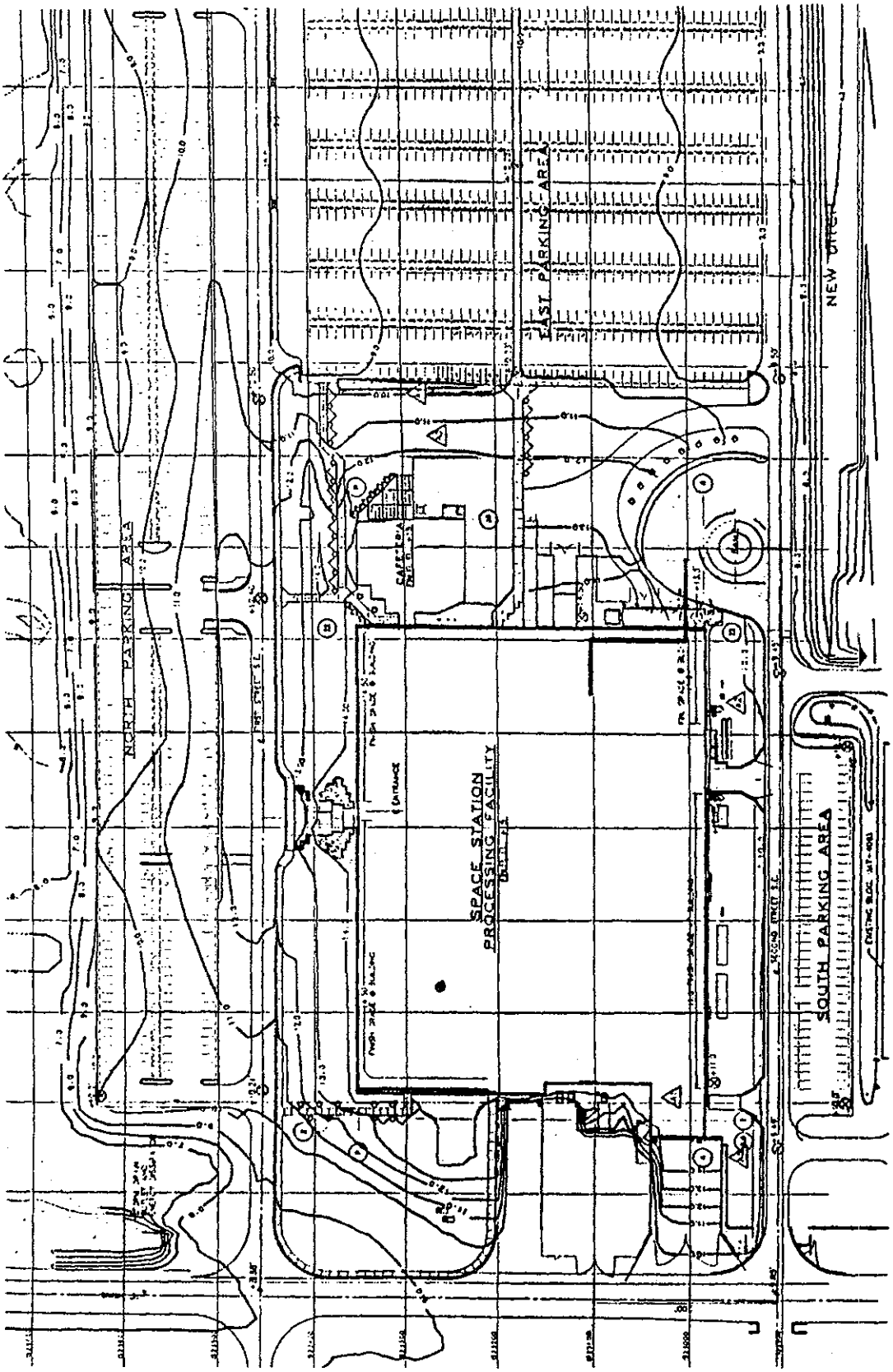

Figure 5-7. Finish-Grading Drawing

5.9.2 REQUIREMENTS. The following requirements shall apply to the preparation of a finish-grading drawing:

a. A scale or scales appropriate to delineate the requirements shall be used. When sections are required, an exaggerated vertical scale may be used, and both scales shall be listed below the section, thus:

SECTION D
SCALE: HORIZ. 1 mm = 5000 mm
VERT. 1 mm = 500 mm

b. A coordinate grid system shall be placed on the drawing.

c. Structures and utilities, both above and below ground, shall be shown.

d. Existing contours shall be shown using a dashed line.

e. Finished grade contours shall be shown using a solid line.

f. Spot elevations shall be shown at building lines, in paved areas, at road intersections, and wherever required for clarity.

g. North arrow for orientation shall be shown with a simple and effective representation.

h. Where extensive earth work is anticipated to accomplish the grading requirements, sections may be taken and represented in profile form.

i. Reference shall be made to the plot plan and other applicable drawings.

j. Temporary erosion control devices and locations shall be shown.

5.10 PLAN AND PROFILE DRAWING

5.10.1 DEFINITION. A plan and profile drawing delineates on one drawing both the horizontal (plan) and the vertical (profile) location of utilities, such as underground drain lines, roads, railroads, overhead steam lines, etc. (See figure 5-8.) The drawing is used to show the relative elevation of points along the utilities route (plan) in relation to the ground elevation. This type drawing provides construction data for roads, railroads, pipe lines, etc.
The profile is a "stretched-out" elevation at the centerline of the road, railroad, or pipe line being shown in plan view.

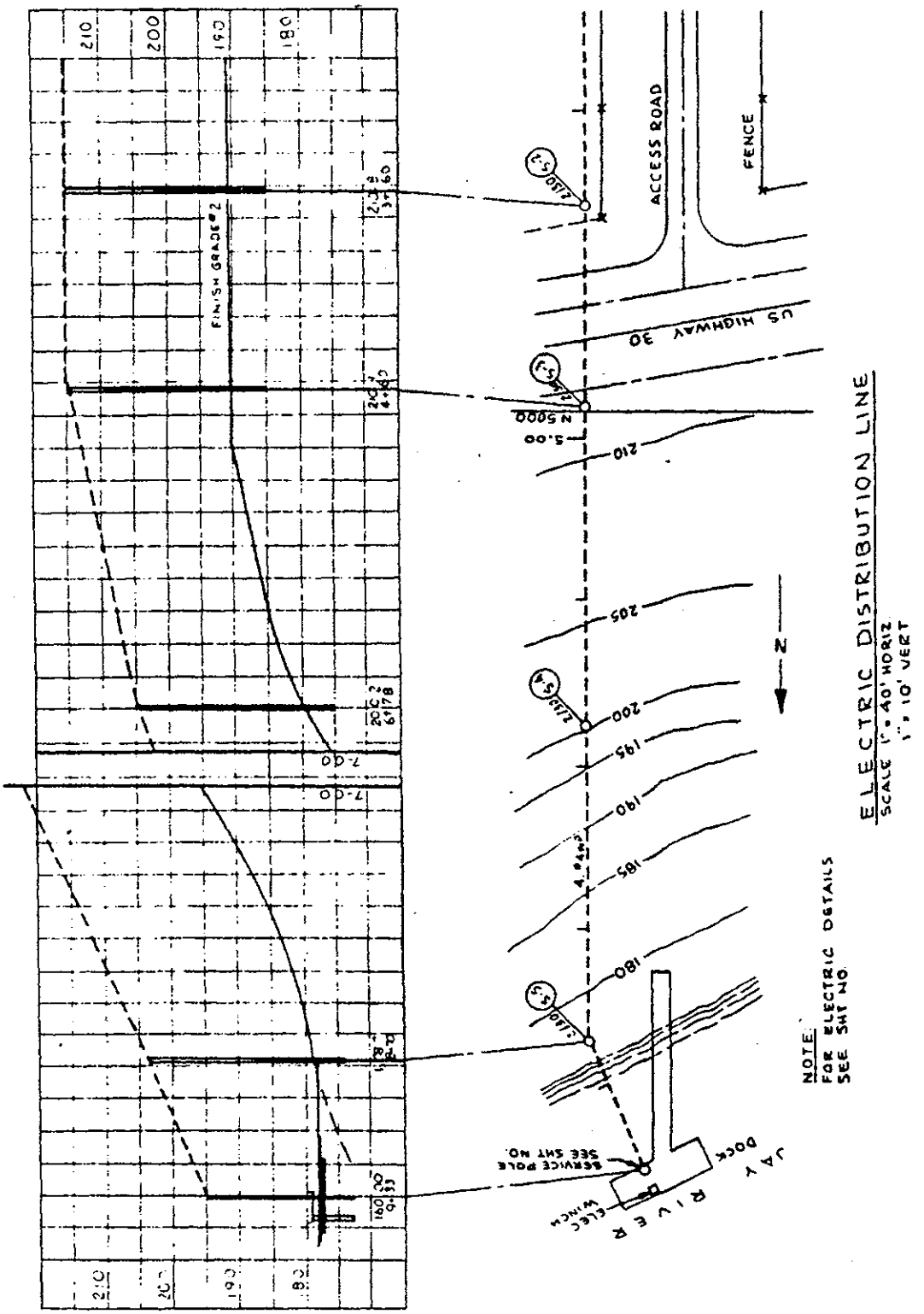

Figure 5-8. Plan and Profile Drawing

A plan and profile drawing may fall in one of the three following subclasses:

a. Plan with profile at grade

b. Plan with profile above grade

c. Plan with profile below grade

5.10.2 REQUIREMENTS. The following requirements shall apply to the preparation of a plan and profile drawing.

a. The vertical scale is generally exaggerated to emphasize slight differences in elevation, and both scales (the horizontal and vertical scales) shall be shown thus:

PROFILE

Scale: HOR 1 mm = 5000 mm
VERT 1 mm = 500 mm

b. The pipe, road, or railroad in a plan view may be represented by its centerline only shown as a single thick solid line.

c. The profile of the pipe, road, or railroad, when it may exceed the upper or lower limits of the profile grid, shall be broken and started anew on the profile grid. An accented vertical line shall be delineated and new elevation values given to the horizontal grid lines. (See figure 5-8.)

d. All utilities crossing the subject pipe, road, or railroad shall be shown in both plan and profile, giving the elevation of the crossing.

e. Stationing shall be shown on the plan by the use of tick marks on the centerline at even stations and identified by station numbers. Stationing on the profile shall be indicated at the bottom of the profile.

f. Existing contours or grades shall be shown on profile views using a dashed line.

g. New contours or grades shall be shown on profile views using a solid line.

h. Continuation drawings, when used, shall be properly referenced and identified on all applicable drawings.

In addition to the previous items, the following data shall be placed on the plan and profile drawings defined below.

5.10.2.1 Plan With Profile at Grade. This type of drawing (figure 5-9) is used primarily for the design and construction of roads and railroads and shall contain, in addition to the requirements above, the following:

a. Plan

(1) Beginning and end points and each point of intersection (PI) of extended centerlines shall be given by coordinates on the plan.

(2) Stations shall be shown at the beginning and end, at each point of curvature (PC) and point of tangency (PT) (or curvature ending), and at the intersection of the centerline with all existing utilities on the plan.

(3) Complete data on curves, such as data for horizontal and vertical curves, shall be given on the plan. For example:

CURVE DATA

PI = 14 + 16.43

Δ = 45° 30' 00"

D = 17° 00' 00" Rf

T = 141.33'

L = 268.65'

R = 338.3'

b. Profile

(1) On the profile view, the profile shall be shown at subgrade or finished grade with a thick solid line and noted accordingly.

(2) All vertical PI's and beginning and end of vertical curves shall be stationed and their respective elevations shown on the profile.

(3) Middle ordinate and length of each vertical curve shall be shown on the profile.

(4) The grade (in percent) shall be shown at all vertical tangents and shall be shown on the profile.

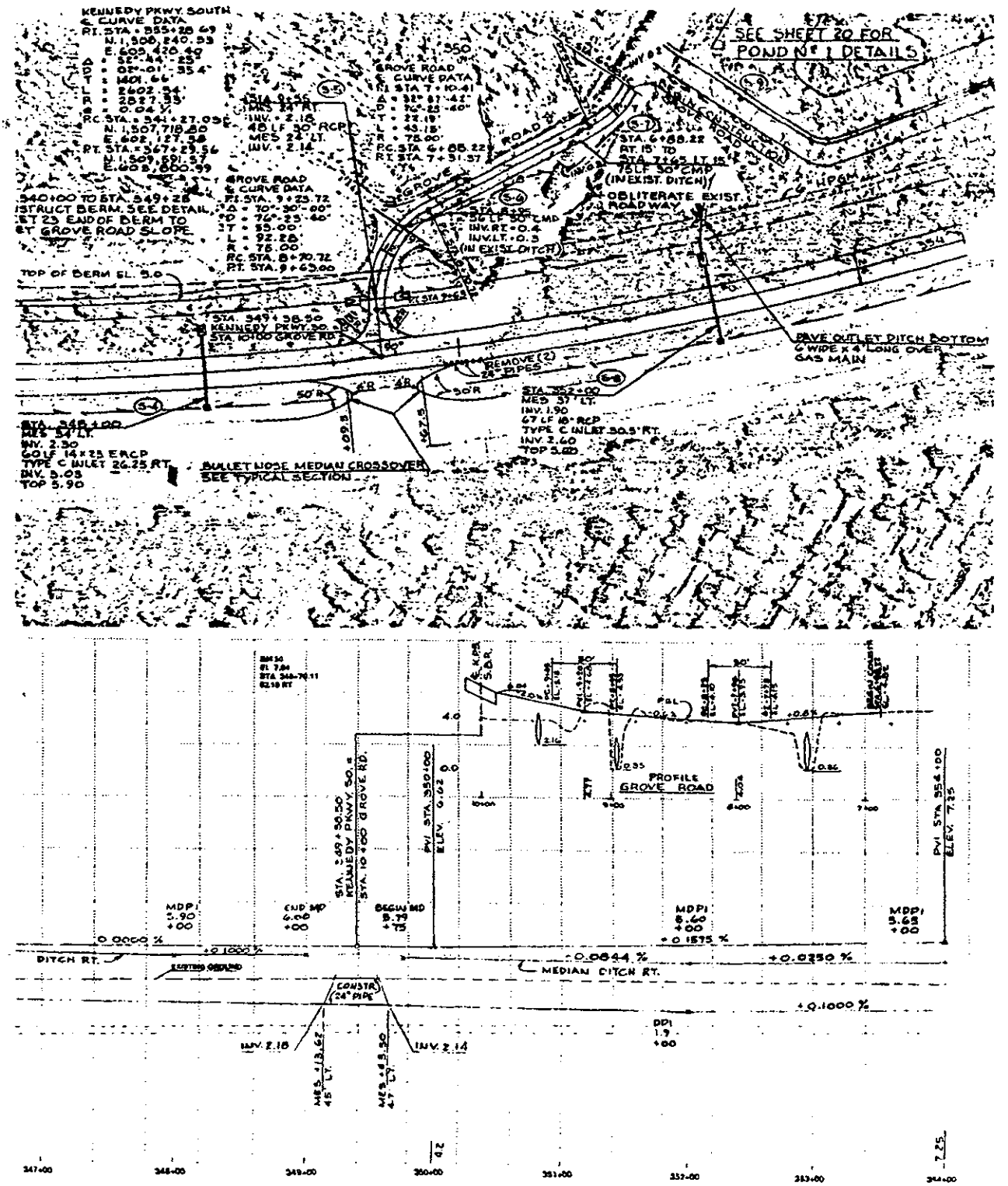

Figure 5-9. Plan With Profile at Grade

(5) The elevations at all even stations shall be shown on the profile.

(6) When feasible, the complete road construction including plan and profile, sections, and description data shall be given on one drawing.

5.10.2.2 Plan With Profile Above Grade. A drawing of this type is prepared for constructing overhead pipe and electrical transmission lines. (See figure 5-10.) It shall contain, in addition to the previous requirements, the following:

a. Plan

(1) All tie-ins, valves, expansion loops, anchors, supports, and bends shall be shown and located by coordinates or stations.

(2) Supports and anchors shall be serially numbered on both plan and profile.

(3) Each drawing shall generally include a schedule covering all supports. The schedule shall list type, height, drawing number, and detail number of the drawing showing the support.

(4) Location and amount of cold springing shall be shown on the plan.

b. Profile

(1) Elevations at centerline of pipe shall be shown at all supports and anchors. In the case of hanger-type supports, crossarm elevations may be shown instead of pipe centerline elevations.

(2) Length of each pipe span and gradient (in percent) shall be shown.

5.10.2.3 Plan With Profile Below Grade. This type of drawing (figure 5-11) is prepared for the construction of water, sewer, and other underground lines. In addition to the requirements previously listed, the following shall be delineated:

a. Plan

(1) The size, material, and/or pipe code shall be shown.

(2) All tie-ins, bends, manholes, valves, and anchors shall be located by coordinates or by stations.

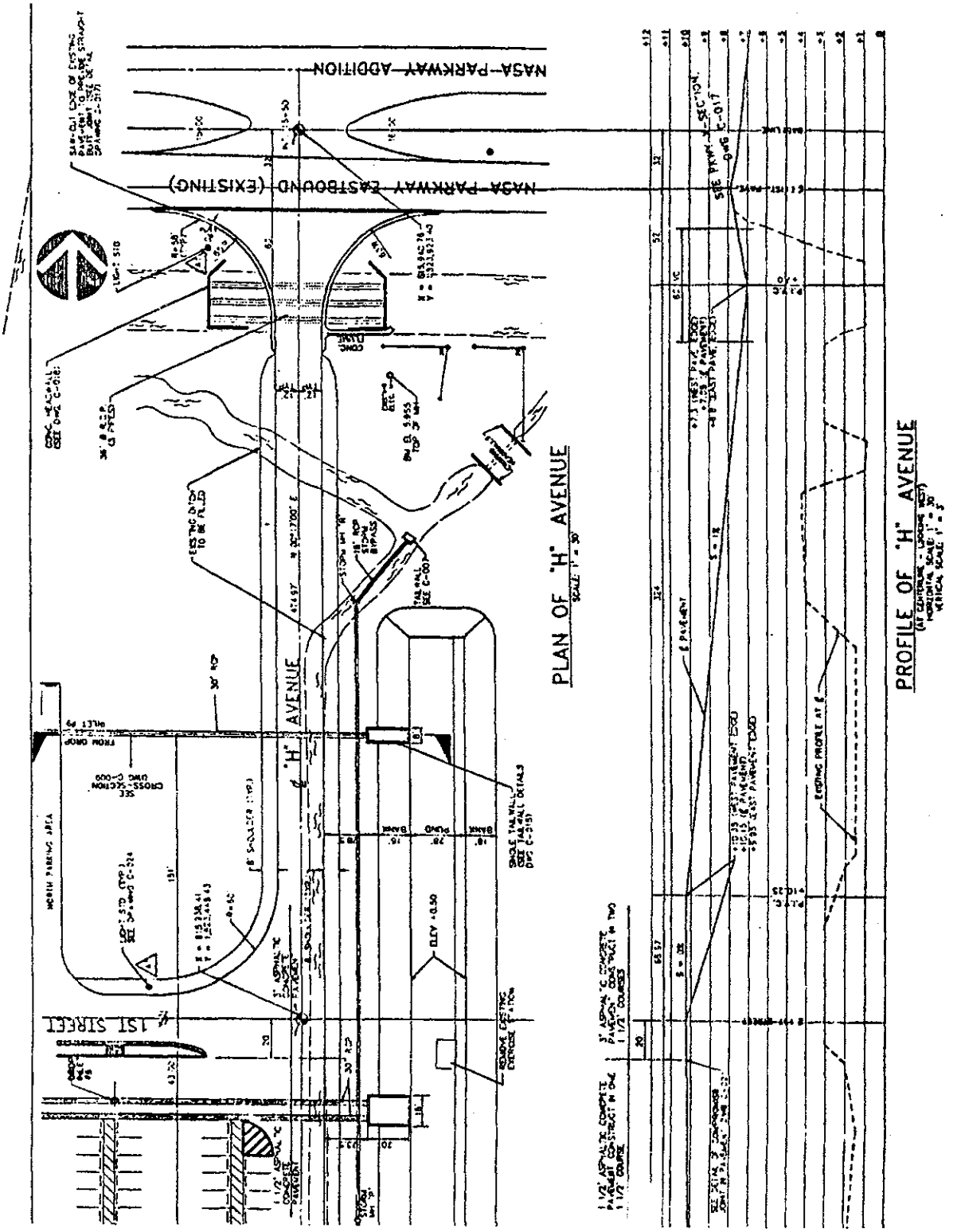

Figure 5-10. Plan With Profile Above Grade

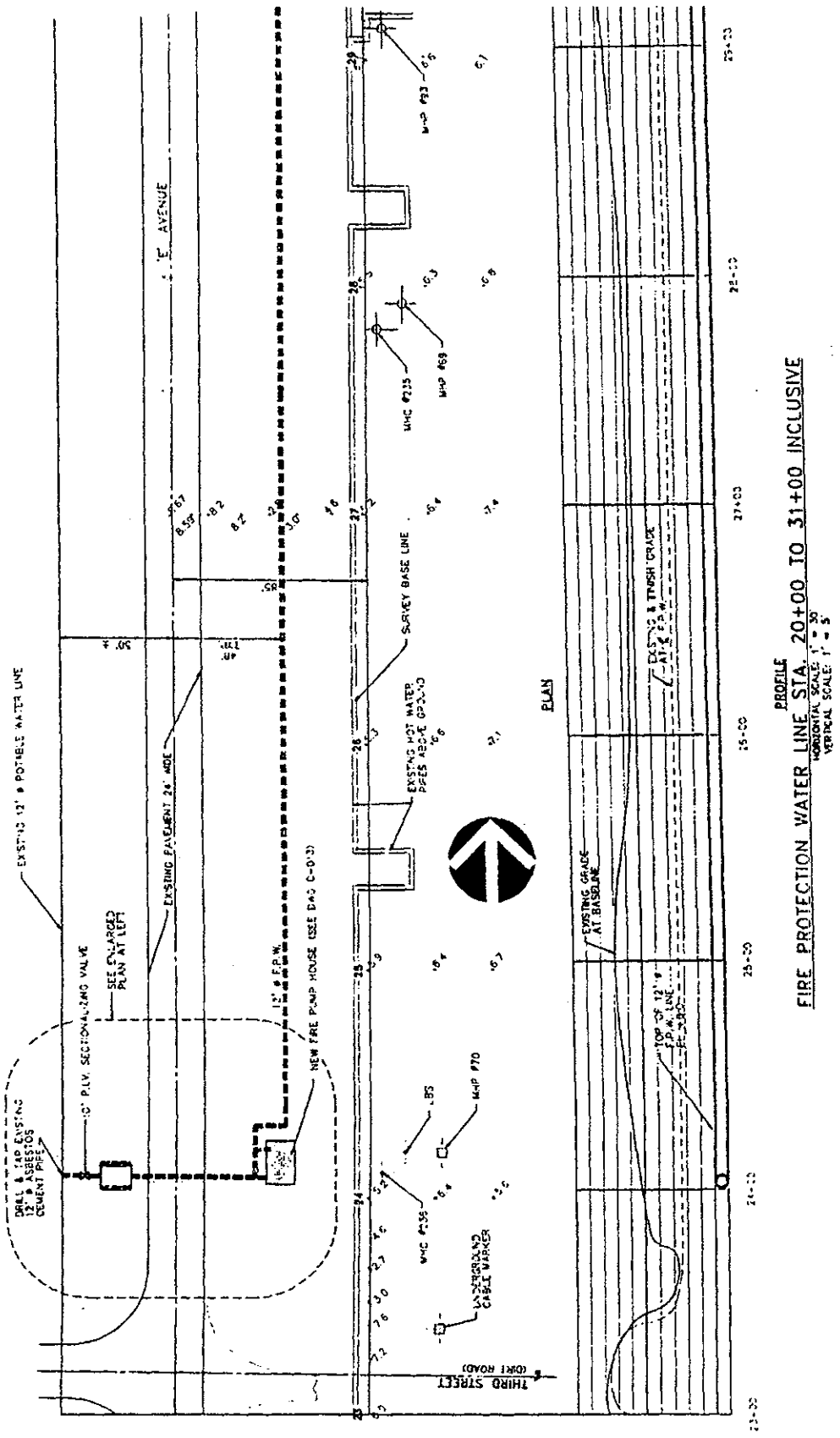

Figure 5-11. Plan With Profile Below Grade

b. Profile

(1) The profile shall be drawn at the invert of the pipe and so noted. In those cases where pipes of large diameter are being delineated, both invert and top of pipe shall be delineated to show vertical clearances to existing lines crossing the new construction. The existing lines shall be shown using a phantom line.

(2) Gradient of line shall be given in percent.

(3) All manholes, valves, anchors, etc., shall be located by station and the invert elevation of these points given.

(4) The extent of the backfill shall be shown on the profile as required.

5.11 ROAD AND PAVING DRAWING

5.11.1 DEFINITION. A road and paving drawing delineates the layout and construction of hard-surfaced pavement required to provide a planned vehicular traffic pattern for the facilities. (See figure 5-12.)

5.11.2 REQUIREMENTS. The following requirements shall apply to the preparation of a road and paving drawing:

a. Scales suitable for showing the detail required shall be used. A scale indicator shall be placed on the drawing.

b. Road and paving sections shall be shown delineating the basic buildup of the finished surface from the rough grade, including subbase, base, and surface wearing course. Sections are normally drawn to an exaggerated vertical scale showing layer composition and thickness, crown of paving, shoulder width, ditches, limits of excavations, and side slopes.

c. Concrete paving drawings shall show reinforcement and joint details. Dowels, if required, shall be shown.

d. Pavement widths, radius of intersection fillets, concrete curbs and gutters, painted parking stripes, bumper stops or blocks, and roadway drainage culverts shall be shown, as applicable.

e. When feasible, the complete road construction details including plan and profile, sections, and descriptive data shall be given on one drawing.

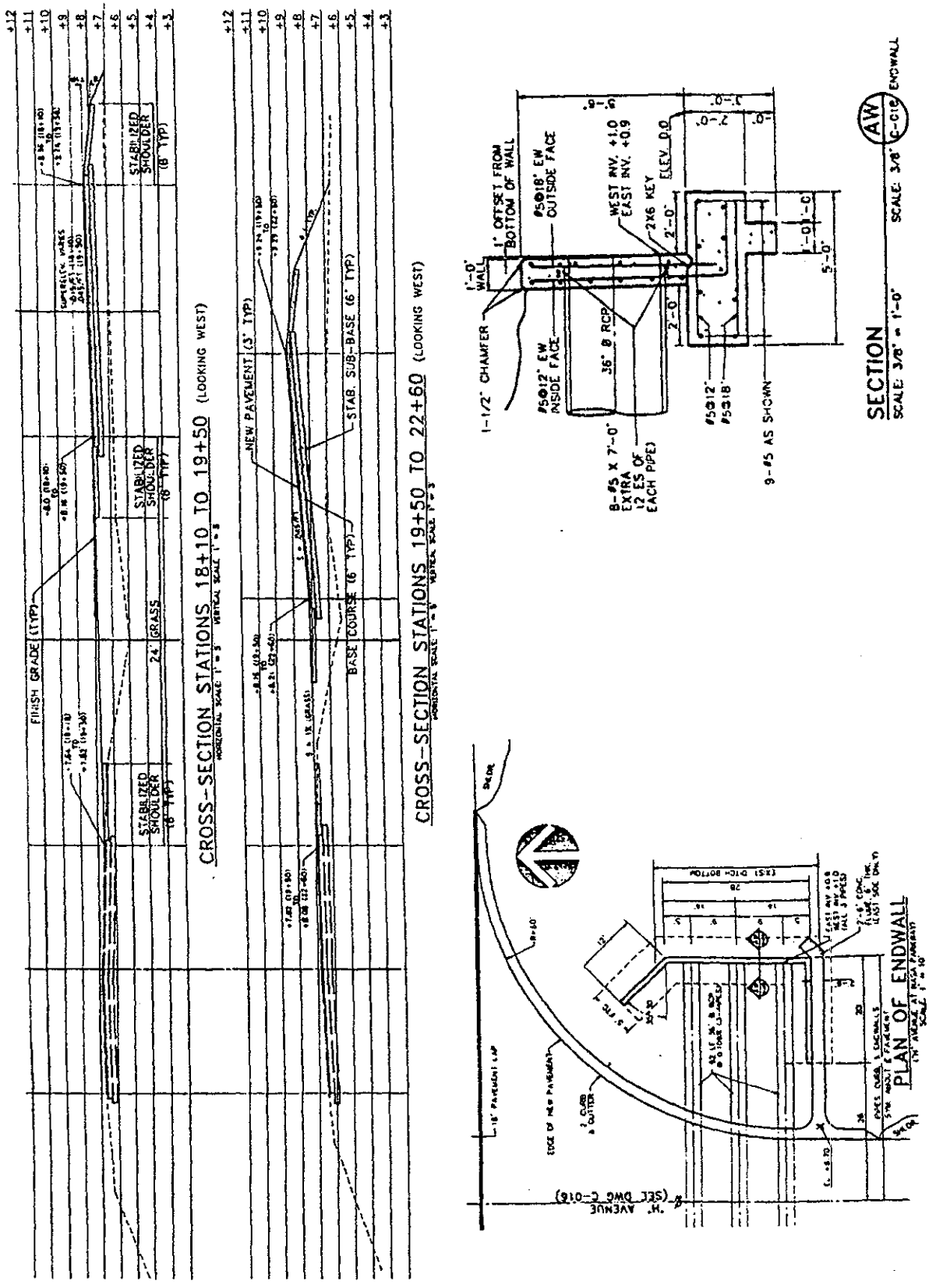

Figure 5-12. Road and Paving Drawing

5.12 SYMBOLS FOR CIVIL DRAWINGS

The basic symbols for use on civil drawings are listed in table 5-1. Symbols for turbidity and erosion control devices may be drawn consistent with the symbols shown in the Florida Development Manual: A Guide to Sound Land and Water Management; Stormwater Management Practices.

Table 5-1. Basic Symbols for Civil Drawings

TITLE/DESCRIPTION	SYMBOL
BOUNDARY LINES	
COUNTY, PARISH, OR MUNICIPAL	
NATIONAL OR STATE	
RESERVATION	
SECTION	
TOWNSHIP OR RANGE	
BRIDGES	
BUILDINGS	

Table 5-1. Basic Symbols for Civil Drawings (cont)

TITLE/DESCRIPTION	SYMBOL
CONTOURS	
FINISH-GRADING	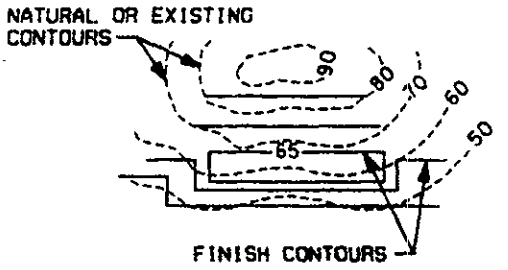
POINT ELEVATIONS	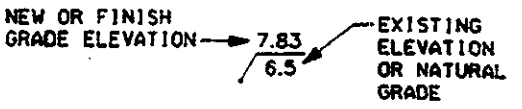
TOPOGRAPHICAL	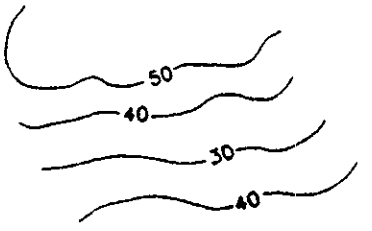
DIKE, LEVEE, OR EMBANKMENT	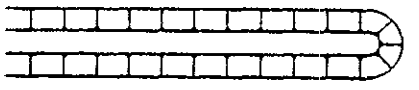
DITCH	
FENCE	
HYDROGRAPHIC	
CULVERT	

Table 5-1. Basic Symbols for Civil Drawings (cont)

TITLE/DESCRIPTION	SYMBOL
DAM	
LAKE	
RIVER	
SPILLWAY	
SPILLWAY WITH LOCK	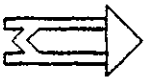
STREAM	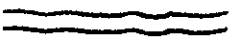
SWALE	
WELL	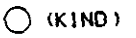
MARKERS	
BENCH MARK	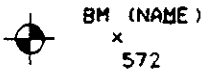
STADIA STATION	
TRAVERSE STATION	

Table 5-1. Basic Symbols for Civil Drawings (cont)

TITLE/DESCRIPTION	SYMBOL
TRIANGULATION STATION	
PILING OR DOLPHIN	
RAILROAD	SINGLE TRACK / DOUBLE TRACK
ROADS	
HIGHWAY, STATE	405 / 405
HIGHWAY, U.S.	US 1 / US 1
PAVED ROADS	
UNPAVED ROADS	
SOIL CLASSIFICATION	
CLAYS, FAT	
CLAYS, FAT, ORGANIC	
CLAYS, LEAN, SANDY, OR GRAVELLY	
CLAYS, MICACEOUS (OR DIATOMACEOUS SOILS)	

Table 5-1. Basic Symbols for Civil Drawings (cont)

TITLE/DESCRIPTION	SYMBOL
GRAVEL, CLAYEY OR CLAYEY, SANDY	
GRAVEL, SILTY OR SILTY, SANDY	
GRAVEL OR GRAVEL, SANDY, WELL-GRADED	
GRAVEL OR GRAVEL, SANDY, POORLY GRADED	
PEAT, HUMUS, AND OTHER ORGANIC SWAMP SOILS	
SAND, CLAYEY OR CLAYEY, GRAVELLY	
SAND, SILTY OR SILTY, GRAVELLY	
SAND OR SAND, GRAVELLY, WELL-GRADED	
SAND OR SAND, GRAVELLY, POORLY GRADED	
SILTS, ORGANIC OR CLAYS, LEAN, ORGANIC	
SILTS, SANDY, GRAVELLY OR SOILS, DIATOMACEOUS	
TANKS	○ (KIND)

ARCHITECTURAL DRAWINGS

6.1 SCOPE

This section defines the architectural drawings normally prepared by or for the John F. Kennedy Space Center (KSC), NASA, and identifies the requirements for preparing the drawings.

6.2 DEFINITION OF ARCHITECTURAL DRAWINGS

Architectural drawings delineate the architectural requirements for buildings and other structures. Included are the magnitude and appearance of interior and exterior materials; the location and construction details of walls, partitions, foundations, floors, roofs, doors, and windows; and the location and details of equipment such as lockers, shelves, and tables.

For structures that are basically structural concrete, structural steel, or a combination of these, the architectural drawings become key or composite drawings. These drawings depict "go together" of all components, plus all other nonstructural details such as wall and roof materials and their application, stair and handrail details, window and louver installation, suspended or acoustical ceiling details, built-in counters, cabinets, etc., and all other miscellaneous steel and iron work.

6.3 TYPES OF ARCHITECTURAL DRAWINGS

Architectural drawings are classified into the following general types:

a. Preliminary study drawings

b. Presentation drawings

c. Pictorial drawings

d. Architectural working drawings

6.4 PRELIMINARY STUDY DRAWING

6.4.1 DEFINITION. A preliminary study drawing depicts the results of preliminary site investigations and studies covering site conditions, occupancy, design criteria versus funding limitations, etc. The drawing presents various solutions for functional planning, structural form, arrangement, and aesthetic treatment of the site, and is used for study and evaluation purposes. (See figure 6-1.)

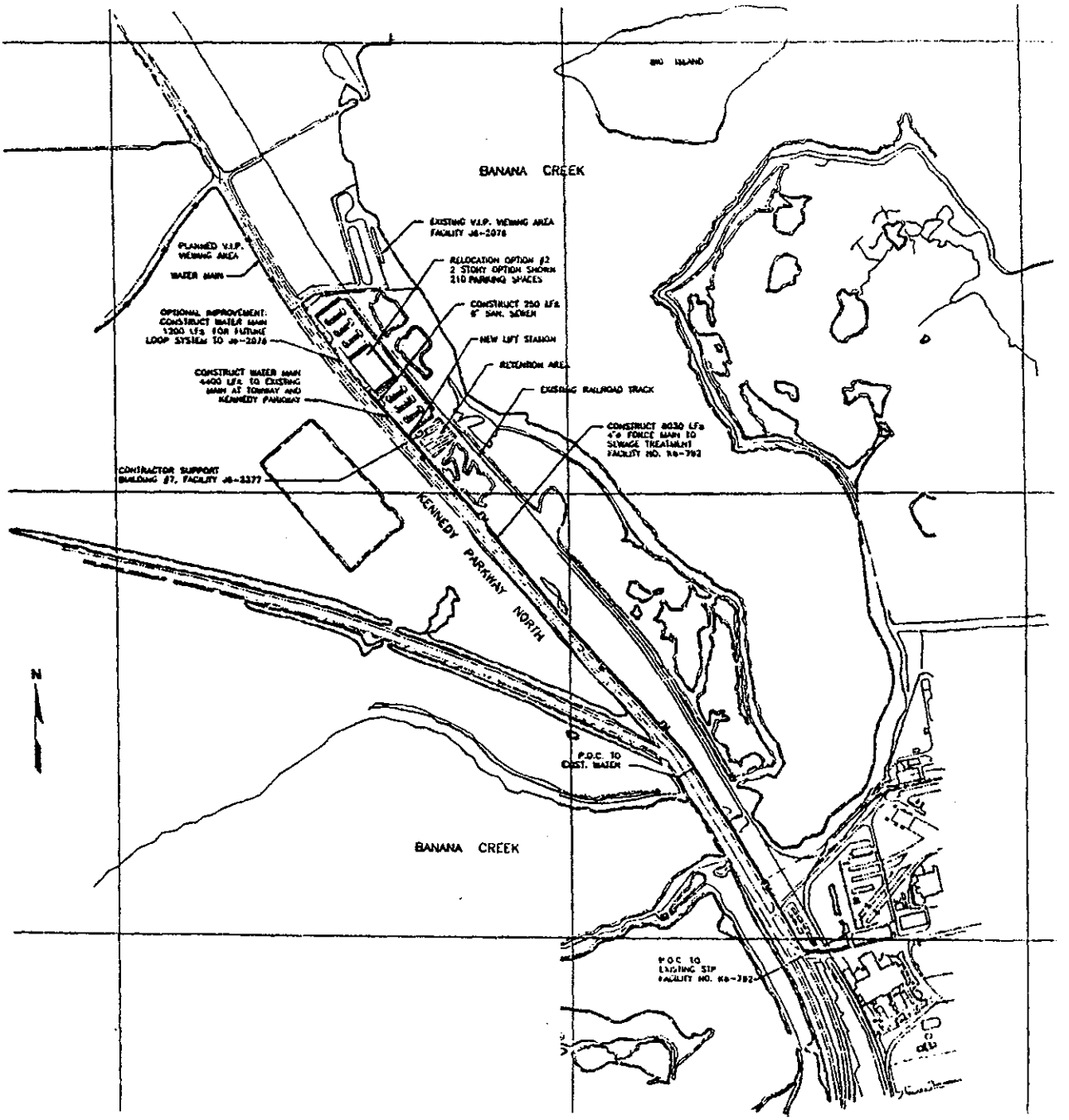

Figure 6-1. Preliminary Study Drawing

Much of the preliminary data obtained and represented on the preliminary study drawing may later be included on the construction drawings.

6.4.2 REQUIREMENTS. A preliminary study drawing shall be prepared using a small scale for plan views that shows approximate sizes, shapes, and interrelationships of the required features and areas. Elevation sketches or freehand perspective views may also be delineated to study relative height and mass of the various components of the project.

6.5 PRESENTATION DRAWING

6.5.1 DEFINITION. A presentation drawing depicts a general, realistic picture of the structure and its environment. (See figure 6-2.)

6.5.2 REQUIREMENTS. A presentation drawing may include the floor plan and a pictorial representation, which is normally a perspective view, showing the exterior of the structure in its completed configuration. The perspective view may also show pertinent features surrounding the facility, such as adjacent buildings, foilage, terrain, walks, drives, etc., as well as at least one human figure, 185 centimeters (6 feet) tall, near the foreground to assist in conveying relative size. The floor plan shall be drawn to scale and shall include the names, sizes, internal layout, and interrelationship of areas.

The floor plan is normally drawn at a small scale and is coordinated with the perspective view. The amount of detail on the floor plan is generally limited to showing exterior walls, interior partitions, window and door openings, and, when advantageous, interior furnishings. In addition, the name and size of rooms shall be given as $\left(\begin{array}{c}\text{General Office}\\ 6\,000\text{ mm x }12\,000\text{ mm}\\ [20'\text{ - }0''\text{ x }40'\text{ -}0'']\end{array}\right)$, and the overall dimensions giving length and width of the structure shall be shown.

6.6 PICTORIAL DRAWING

6.6.1 DEFINITION. A pictorial drawing depicts a general overall presentation of an object or complex. (See figure 6-3.)

A pictorial drawing is used in the development of architectural designs to present clear, easy to understand representations of architectural components.

A pictorial drawing may serve as an aid in visualizing an entire complex, site, structure, etc. Isometric and perspective drawings are recommended for use on an architectural presentation.

6.6.2 REQUIREMENTS. When isometric drawings are used, "not-to-scale" delineation may be employed whenever it is desirable to illustrate some particular features in greater detail than others. In preparing these drawings, the axis shall be either:

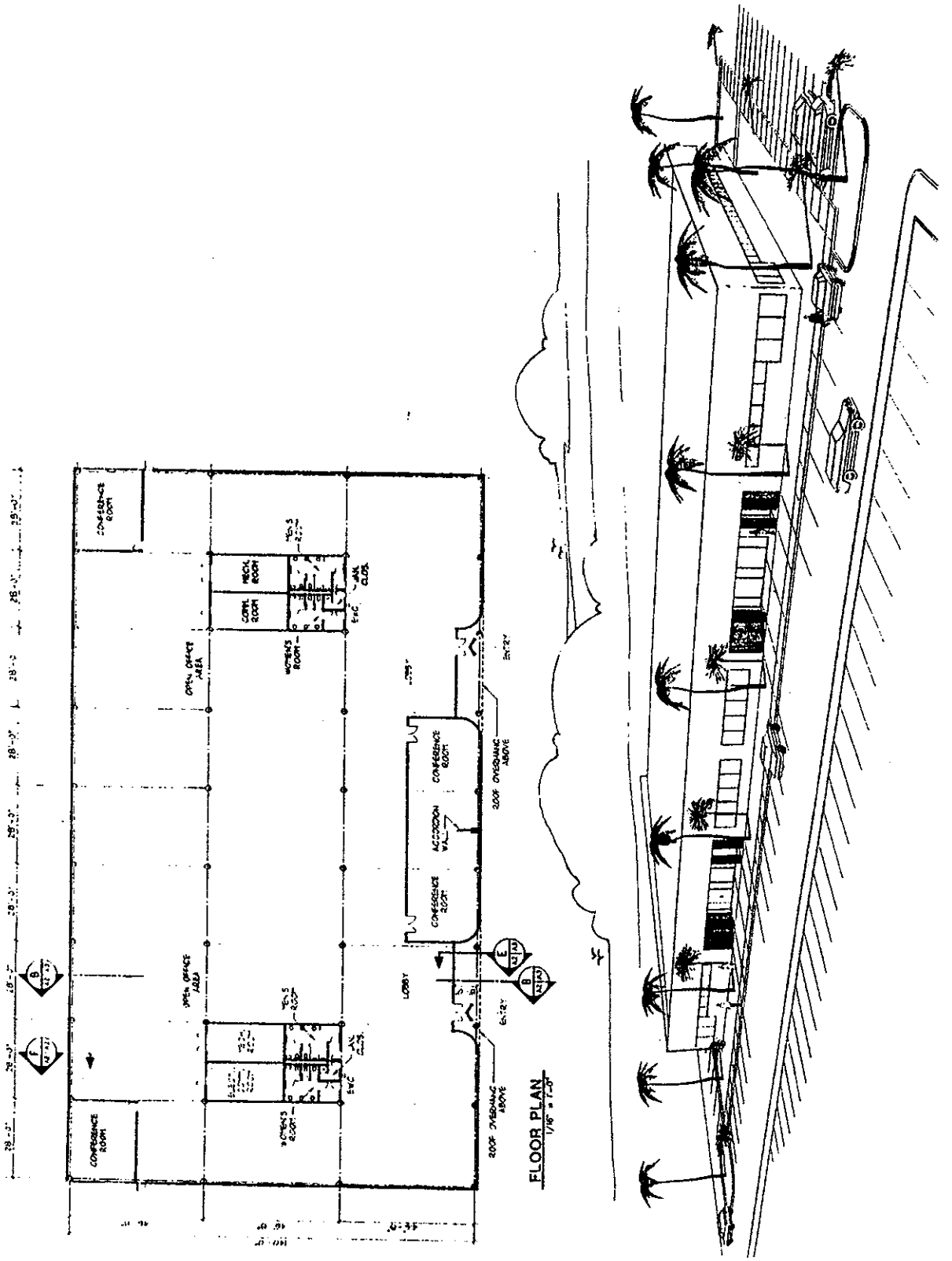

Figure 6-2. Presentation Drawing

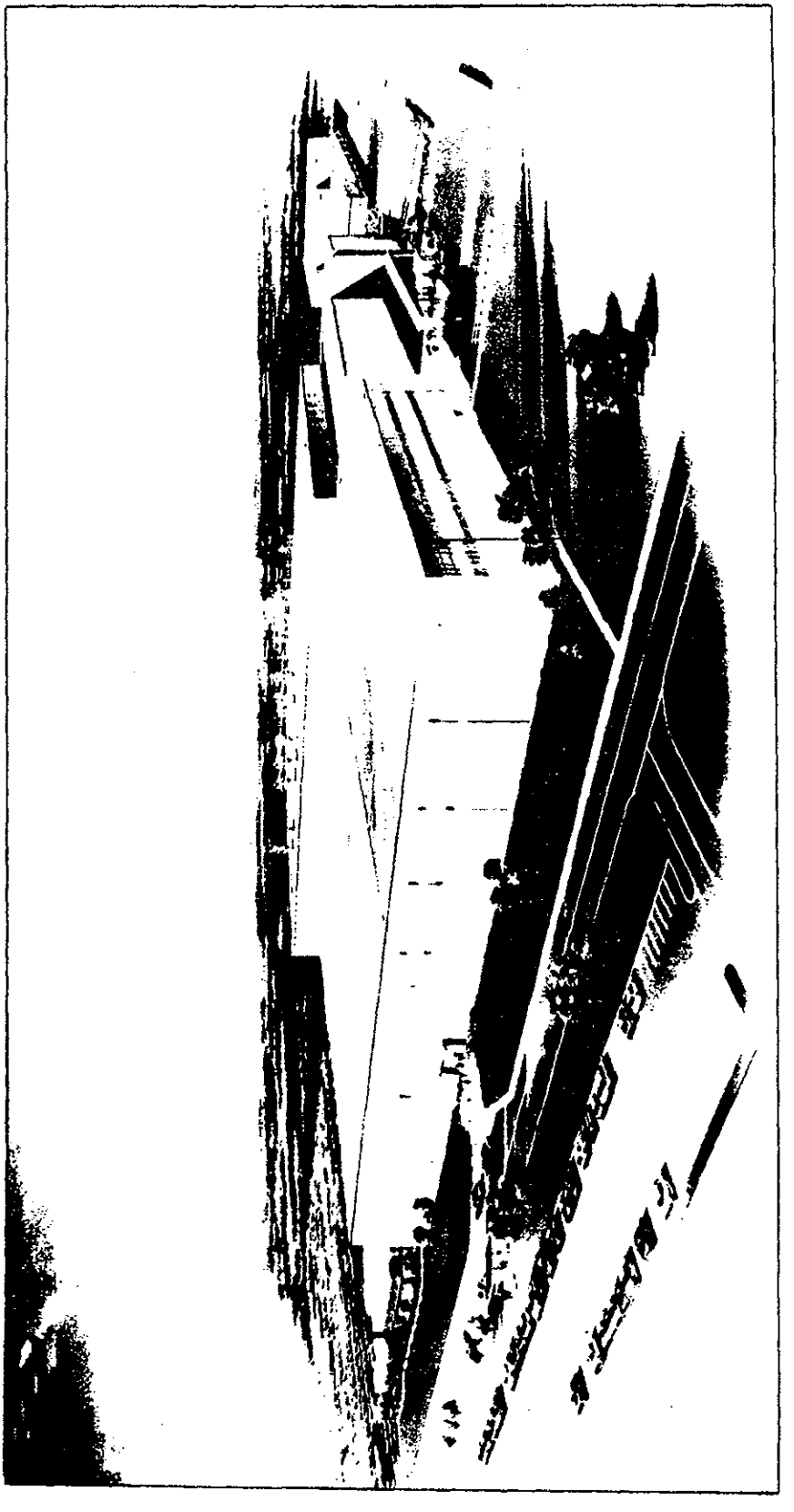

Figure 6-3. Pictorial Drawing

a. A vertical axis, with an axis at a 30-degree angle on each side

b. A vertical axis, with an axis at a 45-degree angle on each side

Shading shall be kept to a minimum and used only when necessary to properly clarify a detail.

Whenever a complex of structures is to be illustrated pictorially, the arrangement, placement, and interrelationship of elements is normally presented by using a perspective drawing.

For perspective drawings of this type, it may be desired to emphasize one or more individual elements within the complex. This is accomplished by selection of the direction from which the view is taken to permit the desired elements to appear in the foreground at larger scale and in a position which displays the desired features of these elements.

6.7 ARCHITECTURAL WORKING DRAWINGS

Architectural working drawings show the actual requirements for the construction of a building or structure as detailed in 6.2. Architectural drawings, together with the specifications, are shown in sufficient detail to completely define the required building or structure. Definitions and requirements for preparation are given for the general types of architectural working drawings in the following paragraphs.

6.7.1 FLOOR PLANS.

6.7.1.1 Definition. Floor plans are views of buildings or structures showing exterior walls, interior partitions, the location of equipment or furniture, windows, doors, and other wall or floor openings. (See figure 6-4.)

6.7.1.2 Requirements. Floor plans depict a wide variety of information of which the following shall be included as applicable:

a. Exterior walls and interior partitions dimensioned in overall length, to offsets, in thickness and location, and construction materials and finish identified by the use of symbols and/or notes to establish the limits of finishes.

b. Window, door, louver, and other interior and exterior wall openings identified by symbols and/or notes, or referenced to a schedule.

c. Columns and column grid identification with dimensions as required to orient and dimension from.

d. Floor conditions such as elevations, slopes, floor drains, thresholds, recesses for mats and troughs, floor finish material, etc.

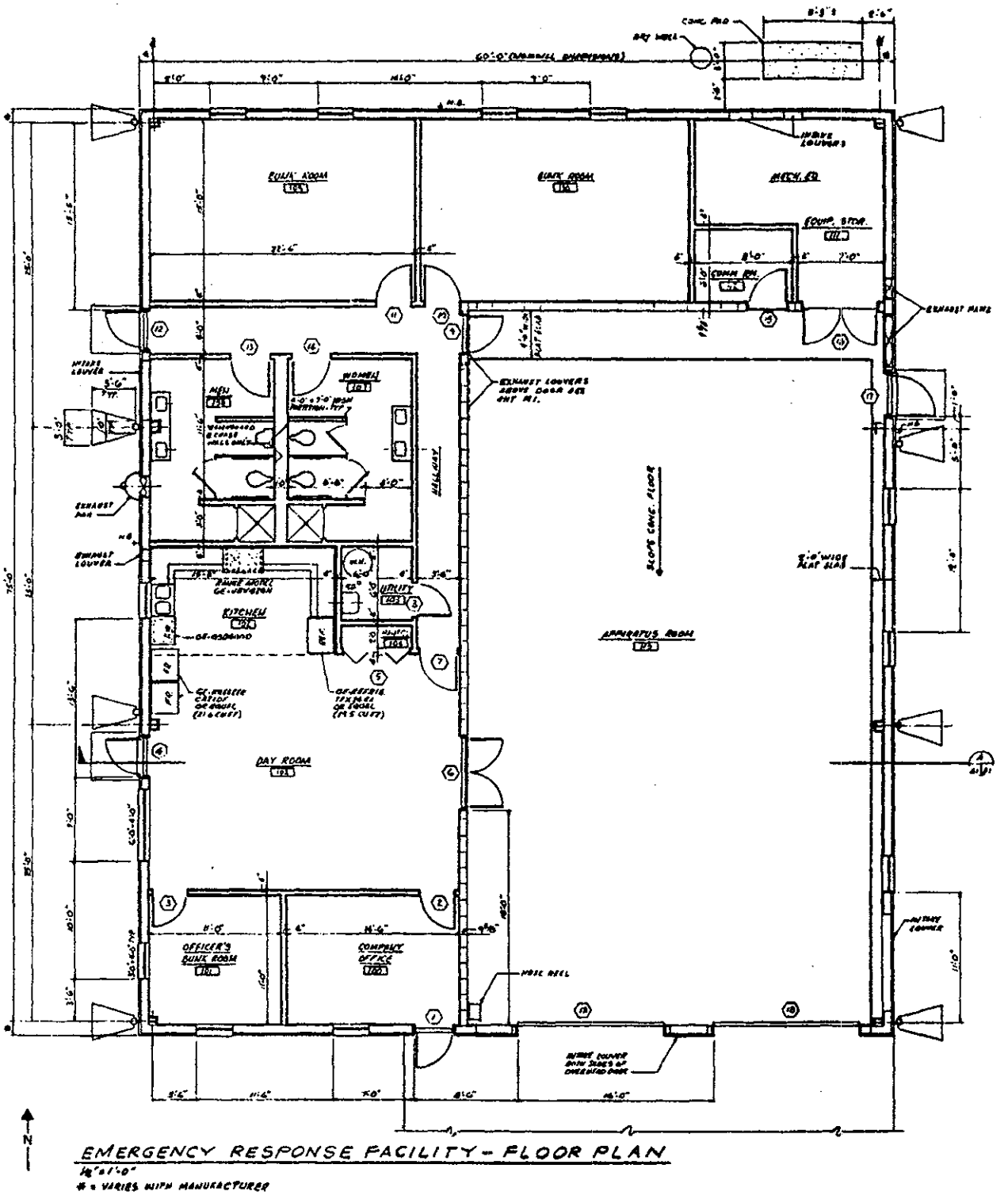

Figure 6-4. Floor Plan

e. Miscellaneous fixtures and/or equipment such as plumbing fixtures, fixed tools or machinery, cabinet work, shelving, etc.

f. Interior features such as vertical air shafts, ducts, pipe chases, elevator and dumb-waiter shafts, ladders, stairways, handrails, etc.

g. Exterior features such as stoops, ramps, steps, platforms, etc.

h. Miscellaneous aids to orientation of the drawings such as a "true north" arrow and "called north" arrow, room or space identification, door swings, vertical direction of stairs, etc.

i. Location of key structural elements that are influential to architectural treatment such as dropped beams or headers, control joints, expansion joints, etc.

j. Interior and exterior dimensions as may be necessary to establish relationship of all elements of a structure, spacing between fixtures, clearances, etc. It is preferable to show dimensions around the outside of the plan view whenever possible. Dimensions on frame plans are given from the outside faces of studs on exterior walls to the centerline of the window or door opening. Stud partitions may be located to the centerline of the partition or to the stud face. On masonry, outside wall dimensions shall be given from the outer face of the wall to the opening of the window or door, then across the opening.

k. Where more than one drawing is required to delineate a complete plan, the drawing continuity shall be maintained using match lines, a key plan on each drawing, and referencing the drawings to each other.

l. All metric dimensions should be in meters or millimeters. For example, show 12 meters plus 43 millimeters as either 12.043 m, where the three decimal places indicate the number of millimeters, or as 12 043 mm. Nonmetric dimensions greater than 12 inches should be given in feet and inches. For example, show 1' - 0 3/4" in lieu of 12 3/4".

6.7.2 ELEVATIONS.

6.7.2.1 Definition. Elevations show exterior or interior wall surfaces and delineate such things as materials, openings, projections, walls, and placement of attachments thereto. (See figure 6-5.)

6.7.2.2 Requirements. The following shall be included on elevations when applicable:

a. Elevations shall generally be drawn to the same scale as the floor plan from which the view is taken.

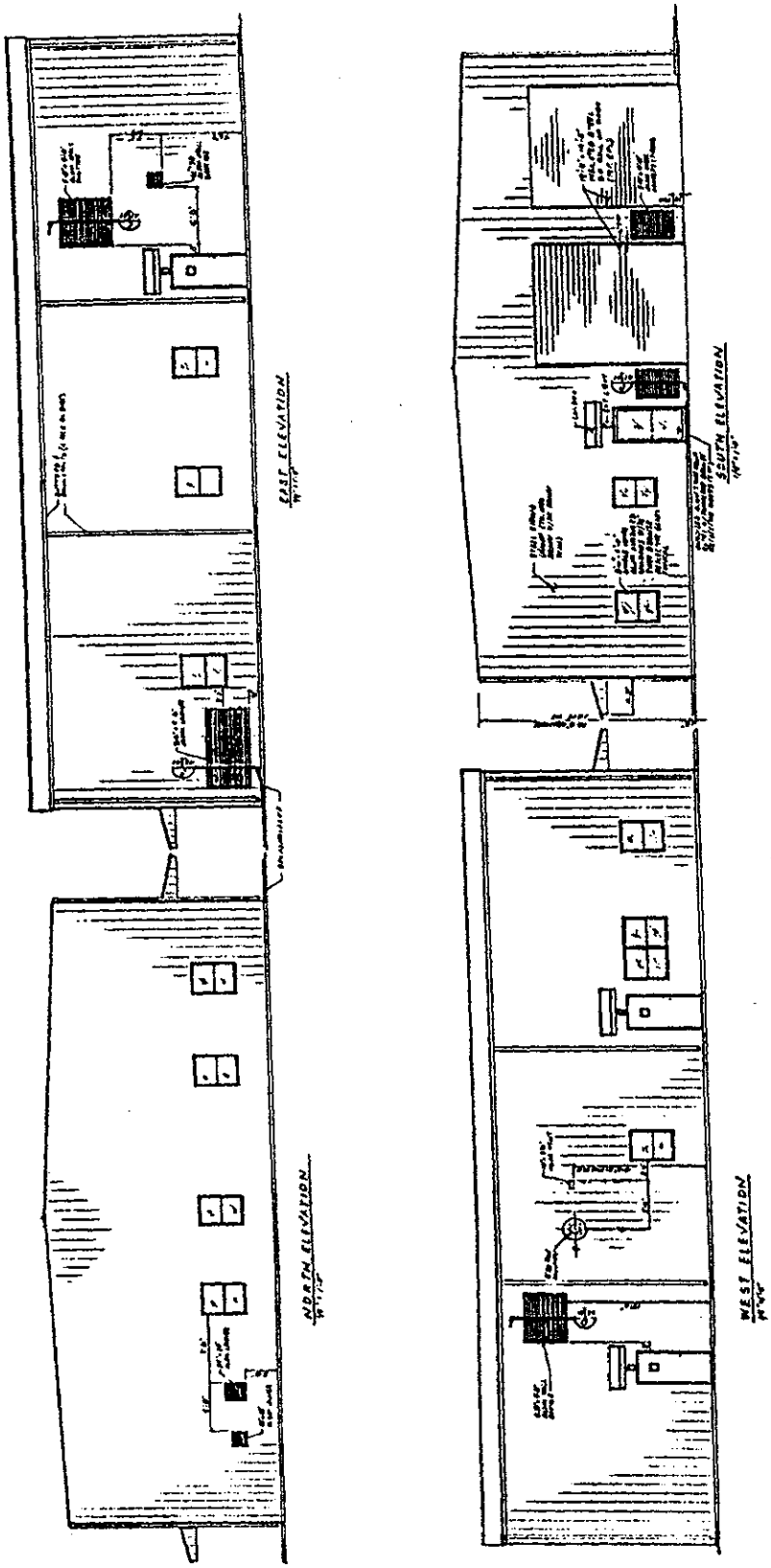

Figure 6-5. Elevations

b. Each exterior elevation shall be identified by compass orientation. For example, the east elevation shall be that side of the structure viewed from the east.

c. Roof, floor, foundation levels, wall openings, raised platforms, wainscot, counter tops,. shelving, etc., shall be dimensioned, as required, to establish their vertical placement.

d. Doors and windows shall be identified by the use of symbols, by notes, or references to a schedule.

e. Material not otherwise identified shall be identified.

f. The column grid, if applicable, shall be shown.

g. Horizontal dimensions to components not located elsewhere shall be given.

h. The clearance between components shall be given as required.

6.7.3 SECTIONS.

6.7.3.1 Definition. Sections are views on a cutting plane which depict internal construction. (See figure 6-6.)

6.7.3.2 Requirements. The following shall be included on sections when applicable:

a. Scale large enough to depict the required detail information

b. Identify each section

c. Elevation of roof, floors, and foundation

d. Vertical dimensions to establish location of components

e. Horizontal dimensions to components not located on the plan

f. Dimensions indicating critical horizontal or vertical clearances

g. The names and/or room numbers of rooms or areas cut by the section

h. Column grid (if used)

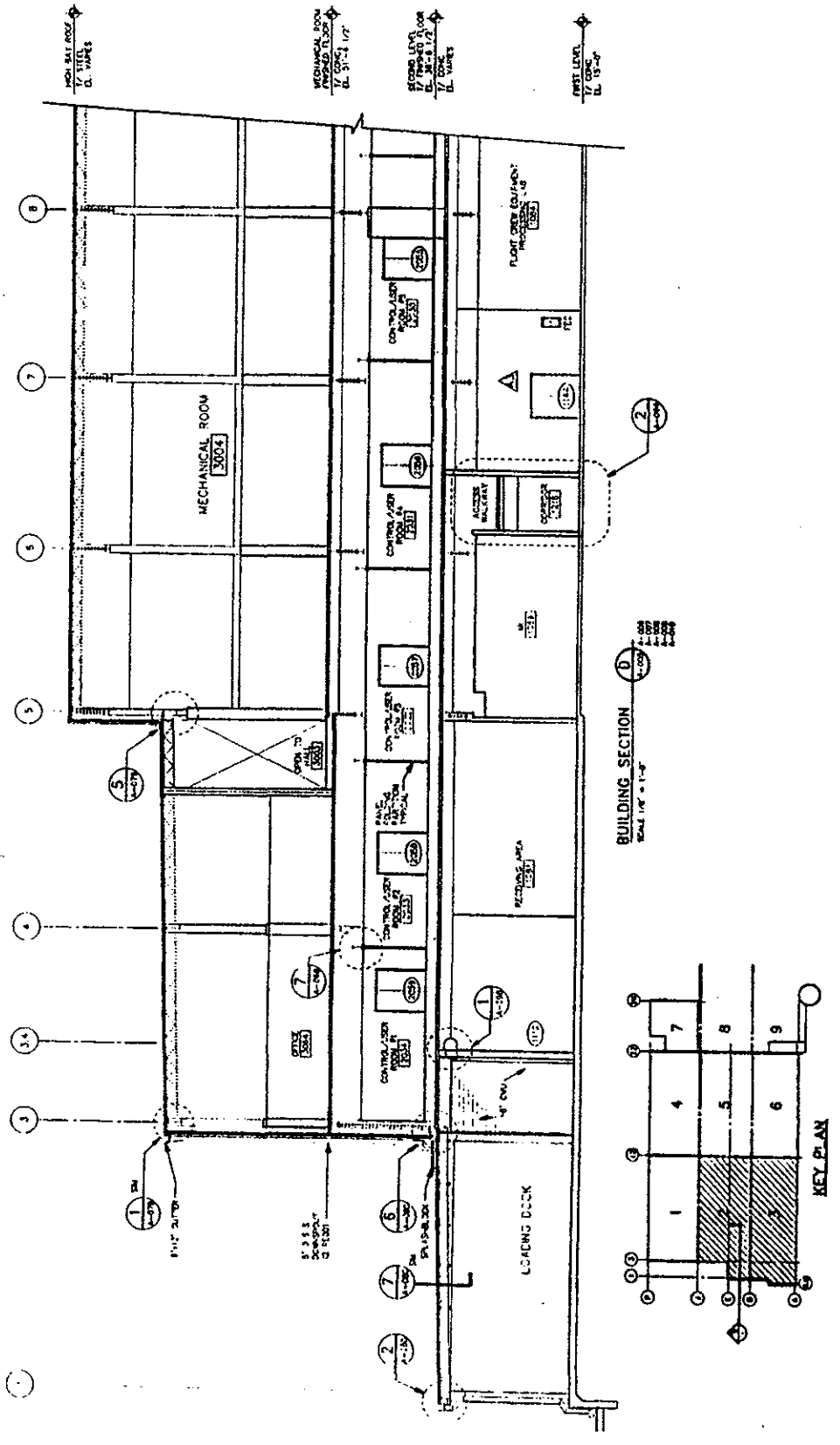

Figure 6-6. Section Drawing

6.7.4 DETAILS.

6.7.4.1 Definition. Details delineate the features of a building or structure that cannot adequately be shown on plans, sections, or elevations. Details usually are shown in larger scale. (See figure 6-7.)

6.7.4.2 Requirements. For most convenient use, architectural details pertaining to each separate craft shall be shown together on the same drawing. In general, details shall be shown on the drawing to which they apply. When this is not possible, a separate drawing of details shall be prepared. Details shall indicate the following:

a. Identification of all materials by direct notation or by reference to a schedule or specific note.

b. Notes and/or dimensions indicating size and shape of all materials shown and, as required, their relationship to each other and to one or more reference points established on other drawings such as column grid, module grid, floor line, etc.

6.7.5 ROOF PLAN.

6.7.5.1 Definition. A roof plan is a plan of the roof and canopy areas of a structure defining limits, location, and extent of all the miscellaneous features constructed thereon. (See figure 6-8.)

6.7.5.2 Requirements. The following shall be included on a roof plan when applicable:

a. A suitable scale, such as 10 mm = 1 m (1/8" = 1'-0")

b. Outline of roofs, canopies, and penthouses

c. Expansion joints, gravel stops, flashing, drains, gutters, vent stacks, skylights, chimneys, etc.

d. Roof pitches or slopes

e. All details that pertain to the roof or its features shall generally be shown adjacent to the roof plan

6.7.6 REFLECTED CEILING PLAN.

6.7.6.1 Definition. A reflected ceiling plan depicts the arrangement, location, and condition of components incorporated into or suspended from the ceiling. (See figure 6-9.)

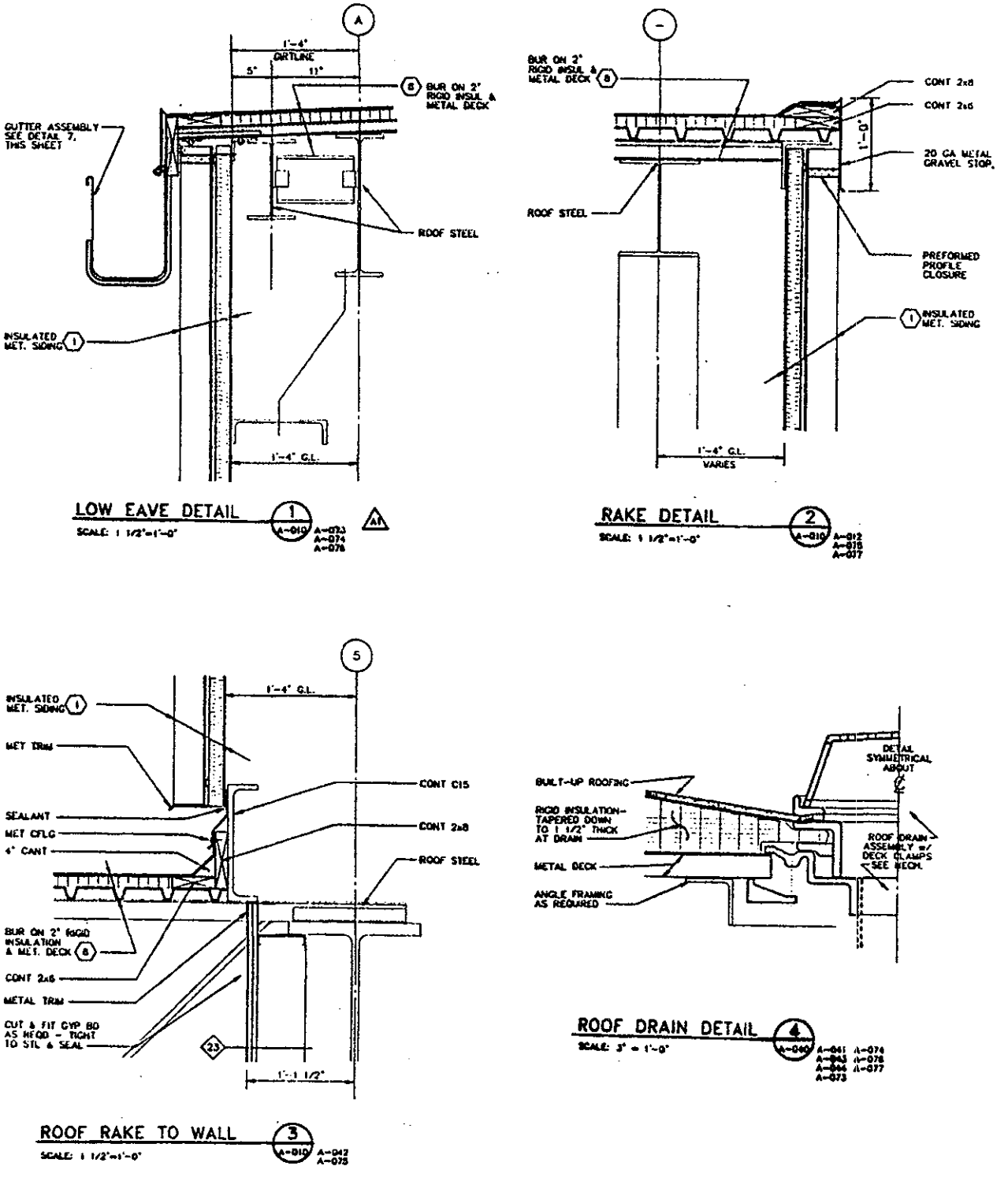

Figure 6-7. Detail Drawing

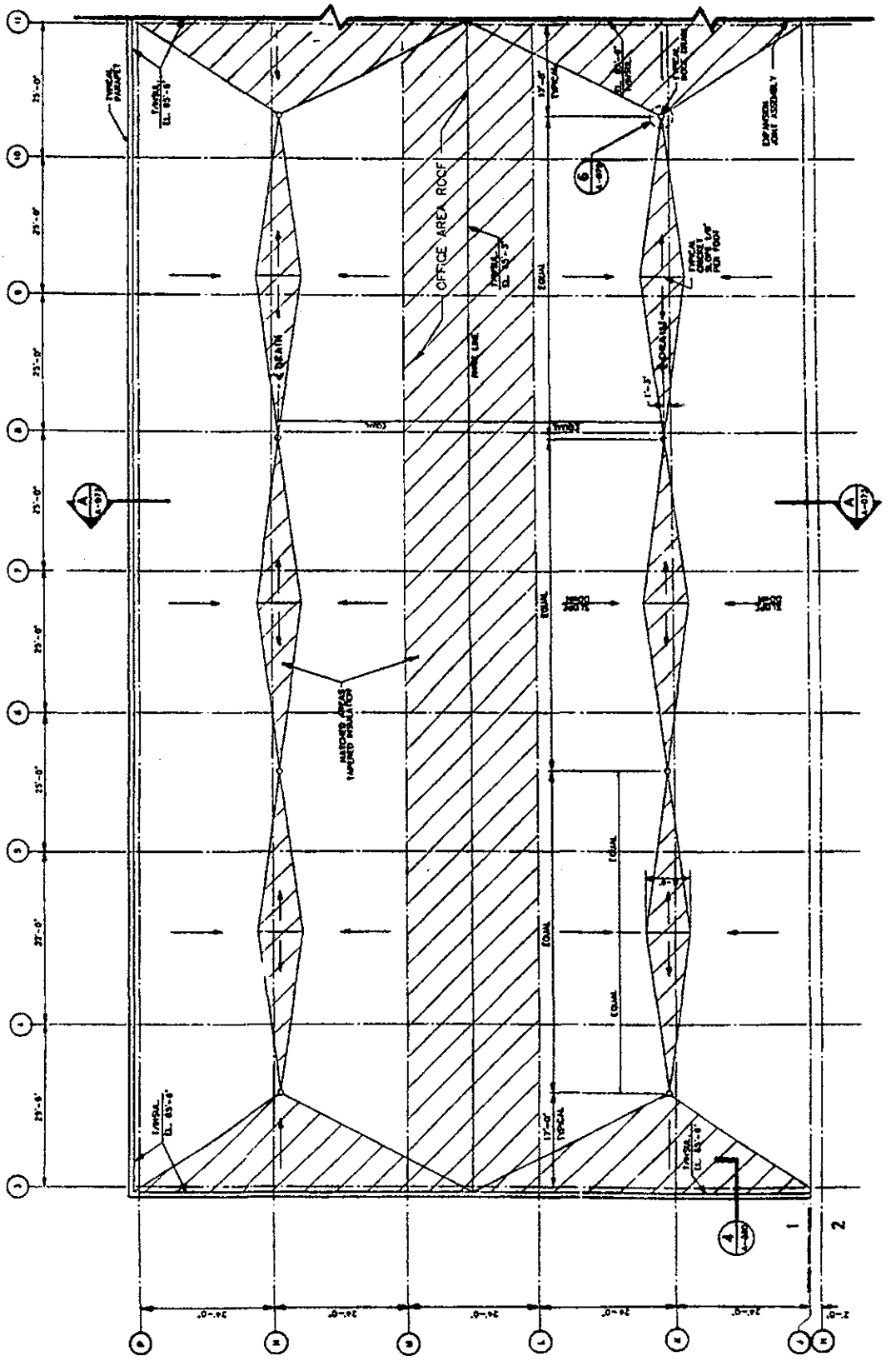

Figure 6-8. Roof Plan

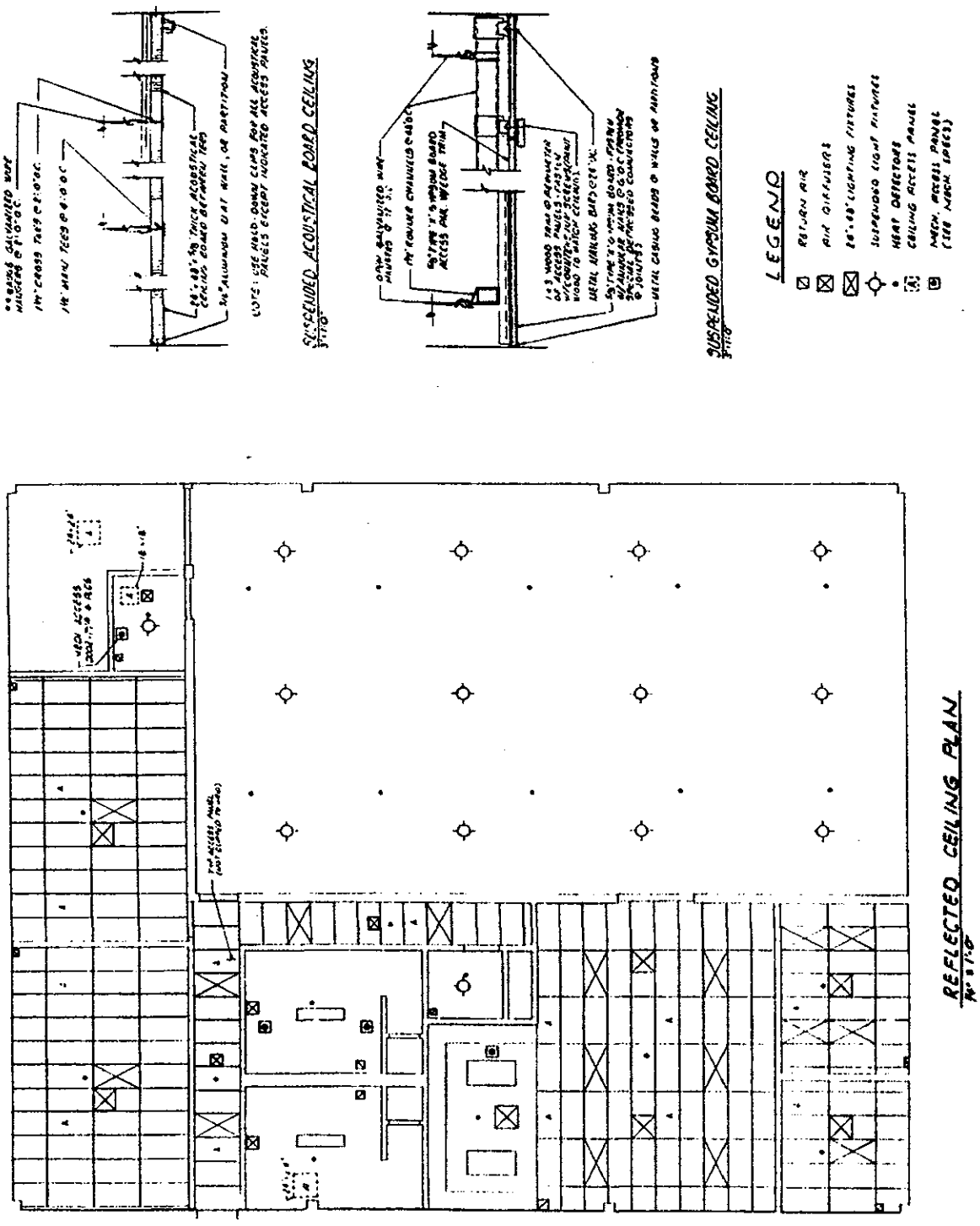

Figure 6-9. Reflected Ceiling Plan

6.7.6.2 Requirements. The following requirements shall apply to the preparation of a ceiling plan:

a. The plan shall be oriented corresponding to the floor plan.

b. The ceiling features shall be delineated as though their outline had been projected directly downward to the floor.

c. The scale used shall generally be the same as that used on the floor plan.

d. Each room or space shall be identified as required.

e. Ceiling heights of each area and changes in ceiling heights shall be shown as applicable.

f. Ceiling fixtures such as light fixtures, skylights, air grills, and sound system fixtures shall be shown.

6.7.7 SCHEDULES.

6.7.7.1 Definition. A schedule is a tabulated listing of parts, materials, and/or conditions such as finishes.

6.7.7.2 Requirements. The following requirements shall apply to the preparation of a schedule:

a. Detailed descriptions of doors, windows, and room finishes are generally listed in a tabular form for ease of identification in material takeoff and as an aid in reading the drawing.

b. Preference shall be given to placing the schedule on the same drawing pertinent to the data contained in the schedule. Where this is not feasible, there shall be sufficient cross-referencing of applicable drawings.

6.7.7.2.1 Door Schedule. A door schedule shows door mark (number), door size, thickness, door type, frame type, and remarks as to special hardware such as weatherstripping, threshold, panic hardware, etc. With the schedule, appropriate details of door frame types and installation will be drawn. In multistory structures, door marks are assigned according to the floor on which they are shown (e.g., doors on the basement level would be numbered 1, 2, 3, etc.; on the grade or first-floor level, 101, 102, 103, etc.; on the second-floor level 201, 202, etc.). A typical door schedule is shown in figure 6-10.

6.7.7.2.2 Window Schedule. A window schedule shows window mark (letter), size, description (usually a recommended manufacturer and model number), and remarks as to special hardware, weatherstripping or glazing, etc. The window marks are assigned letter designations

DOOR SCHEDULE

DOOR NO.	TYPE	WIDTH	HEIGHT	THICKNESS	MATERIAL	DETAIL NO. HEAD	DETAIL NO. JAMB	DETAIL NO. SILL	HDWE SET NO.	LABEL & HOUR RATING	REMARKS
1	A	3'-0"	7'-0"	1 3/4"	ALUM.	-	-	-			ALUM. STOREFRONT "KAWNEER" OR EQUAL
2	C	↓	↓	↓	H.M.	D	E	F			
3	C	↓	↓	↓	H.M.	D	E	F			
4	B	3'-0"	7'-0"	↓	H.M.	-	-	-			10"x10" WIRE GLASS PANEL
5	D	5'-0"	7'-0"	↓	STEEL	-	-	-			METAL BI FOLD CLOSET DOORS
6	B	6'-0"	7'-0"	↓	H.M.	A	B	C		C-3/4 HR.	2 @ 10"x10" WIRE GLASS PANEL
7	E	3'-0"	↓	↓	↓	D	E	F			16"x16" LOUVER
8	C	2'-8"	↓	↓	↓	D	E	F			
9	B	5'-0"	↓	↓	↓	A	B	C		C-3/4 HR.	10"x10" WIRE GLASS PANEL
10	C	↓	↓	↓	↓	D	E	F			
11	C	↓	↓	↓	↓	D	E	F			
12	B	↓	↓	↓	↓	-	-	-			10"x10" WIRE GLASS PANEL
13	E	↓	↓	↓	↓	D	E	F			12"x12" LOUVER
14	E	↓	↓	↓	↓	D	E	F			12"x12" LOUVER
15	B	3'-0"	↓	↓	↓	A	B	C		C-3/4 HR.	NO VISION PANEL
16	B	6'-0"	↓	↓	↓	A	B	C		C-3/4 HR.	NO VISION PANEL
17	B	3'-0"	7'-0"	1 3/4"	H.M.	-	-	-			10"x10" WIRE GLASS PANEL
18	F	12'-0"	14'-0"		STEEL	J	L	K			INSUL. CURT'N. PAINT TO MATCH BLDG-2 DOORS.

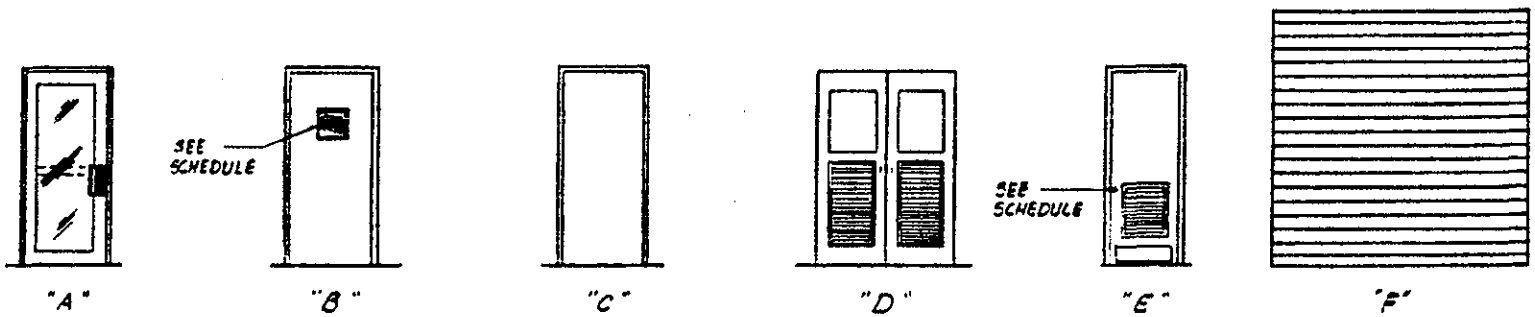

DOOR TYPES

Figure 6-10. Door Schedule

starting with the letter "A." The window mark shown adjacent to its window is cross-referenced to the window schedule by means of the letter designation. With the schedule, appropriate details of window installation shall be drawn. A typical window schedule will have the same basic format as a door schedule (figure 6-10).

6.7.7.2.3 Room Finish Schedule. A room finish schedule is used to give detail descriptions of finishes on floors, wall, partitions, and ceilings. A room finish schedule shall show floor elevation, space designation (office, corridor, machine room, etc.), floor material and finish, and remarks as to special treatment or reference to special instructions. (See figure 6-11.)

6.7.8 MISCELLANEOUS DELINEATIONS. Miscellaneous delineations depict construction information not shown on any other plan, section, or detail. (See figure 6-12.)

6.8 ARCHITECTURAL SYMBOLS

Graphic symbol used on architectural drawings shall be in accordance with MIL-STD-14 and as shown in tables 6-1 and 6-2. The symbols shown in these tables show the symbols used for common types of construction and materials.

ROOM FINISH SCHEDULE

ROOM NUMBER	ROOM TITLE OR AREA DESIGNATION	FLOOR					BASE			WAIN SCOT		WALLS					CEILING						HEIGHT	REMARKS
		CONCRETE	CERAMIC TILE	VINYL COMPOSITION TILE	CARPET		CERAMIC TILE	RUBBER	VINYL	CERAMIC TILE		STEEL STUDS	CONCRETE BLOCK	GYPSUM BOARD			ACOUSTICAL BOARD	GYPSUM BOARD						
100	COMPANY OFFICE				●			●				●	●	●			●						10'-0"	
101	OFFICER'S BUNK ROOM				●			●				●	●	●			●							
102	DAY ROOM			●								●	●	●			●						10'-0"	
103	KITCHEN			●								●		●				●					8'-0"	
104	PANTRY			●								●		●				●					10'-0"	
105	UTILITY		●	●			●	●				●		●				●						CERAMIC TILE FLOOR & WAINSC. @ SINK
106	HALLWAY			●								●	●	●			●							
107	WOMEN		●				●			●		●		●				●						
108	MEN		●				●			●		●		●				●						
109	BUNK ROOM				●			●				●		●			●							
110	BUNK ROOM				●			●				●		●			●							
111	EQUIPMENT STORAGE	●										●	●	●				●						
112	COMM. ROOM	●										●	●	●				●					10'-0"	
113	APPARATUS ROOM	●										●	●	●				●					18'-0"	

Figure 6-11. Room Finish Schedule

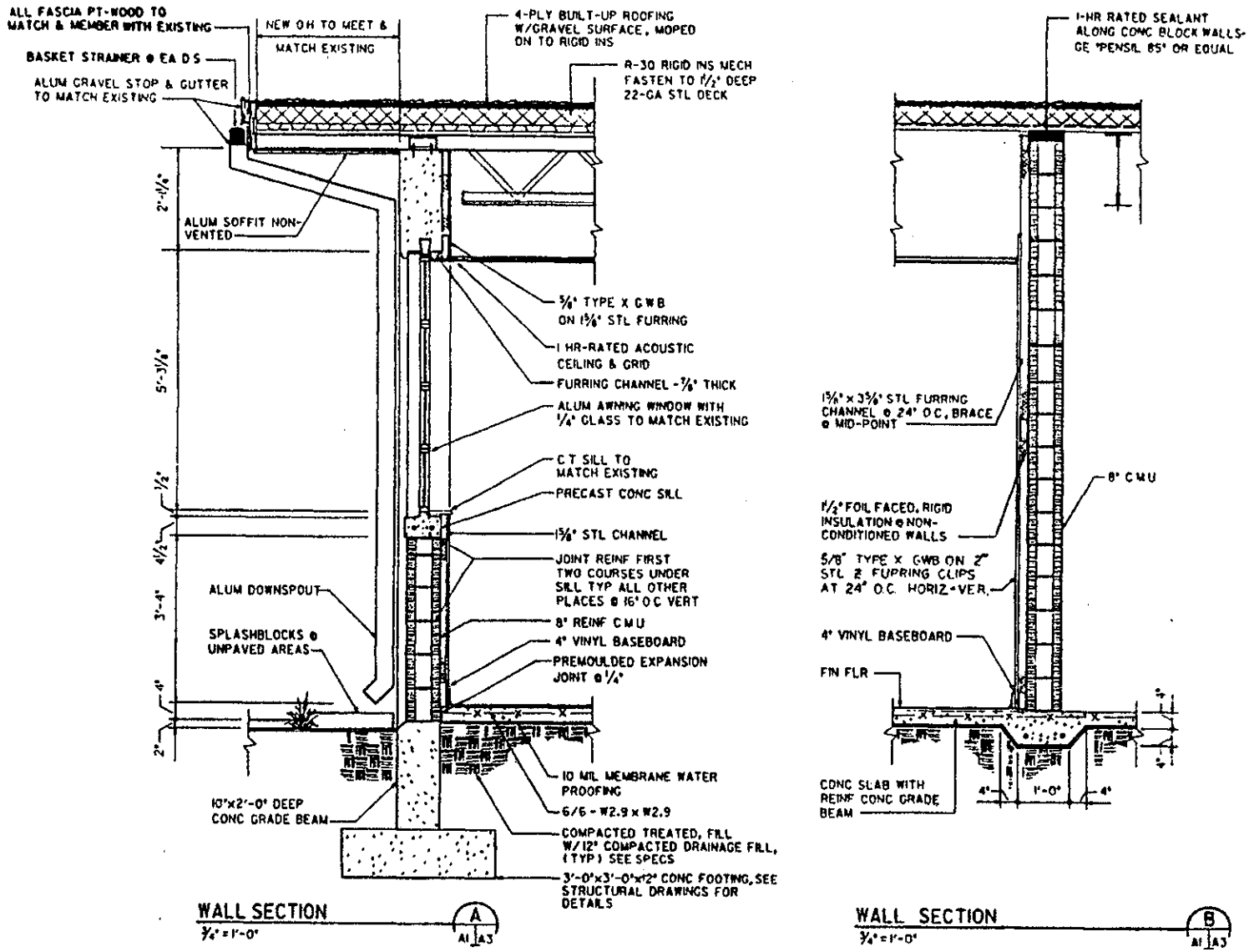

NOTE: CONTRACTOR SHALL TREAT SOIL WITH TOXICANT EMULSION DILUTED PER APPROVED EPA STANDARDS.

Figure 6-12. Miscellaneous Wall Sections (Sheet 1 of 2)

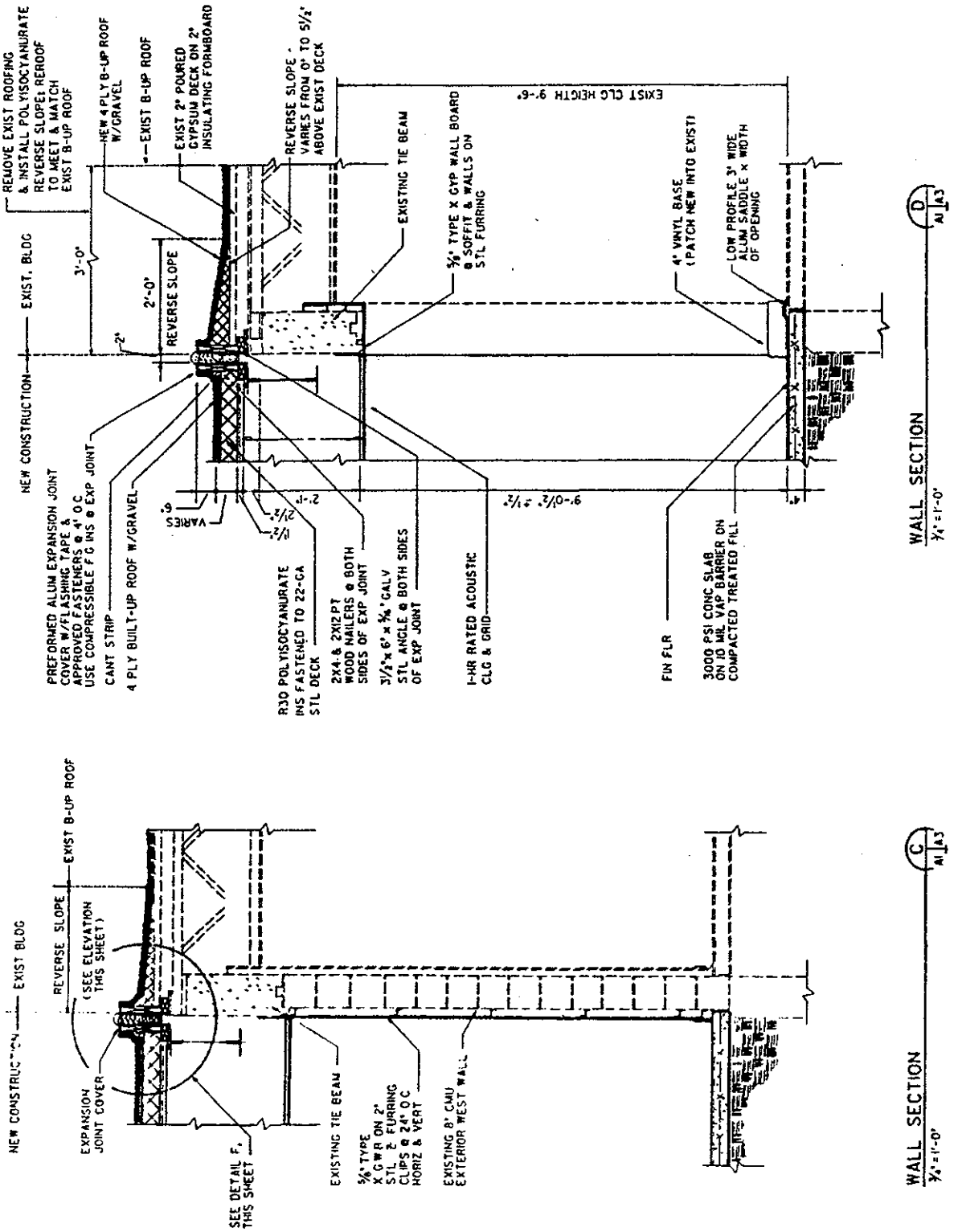

Figure 6-12. Miscellaneous Wall Sections (Sheet 2 of 2)

Table 6-1. Symbols for Common Types of Construction

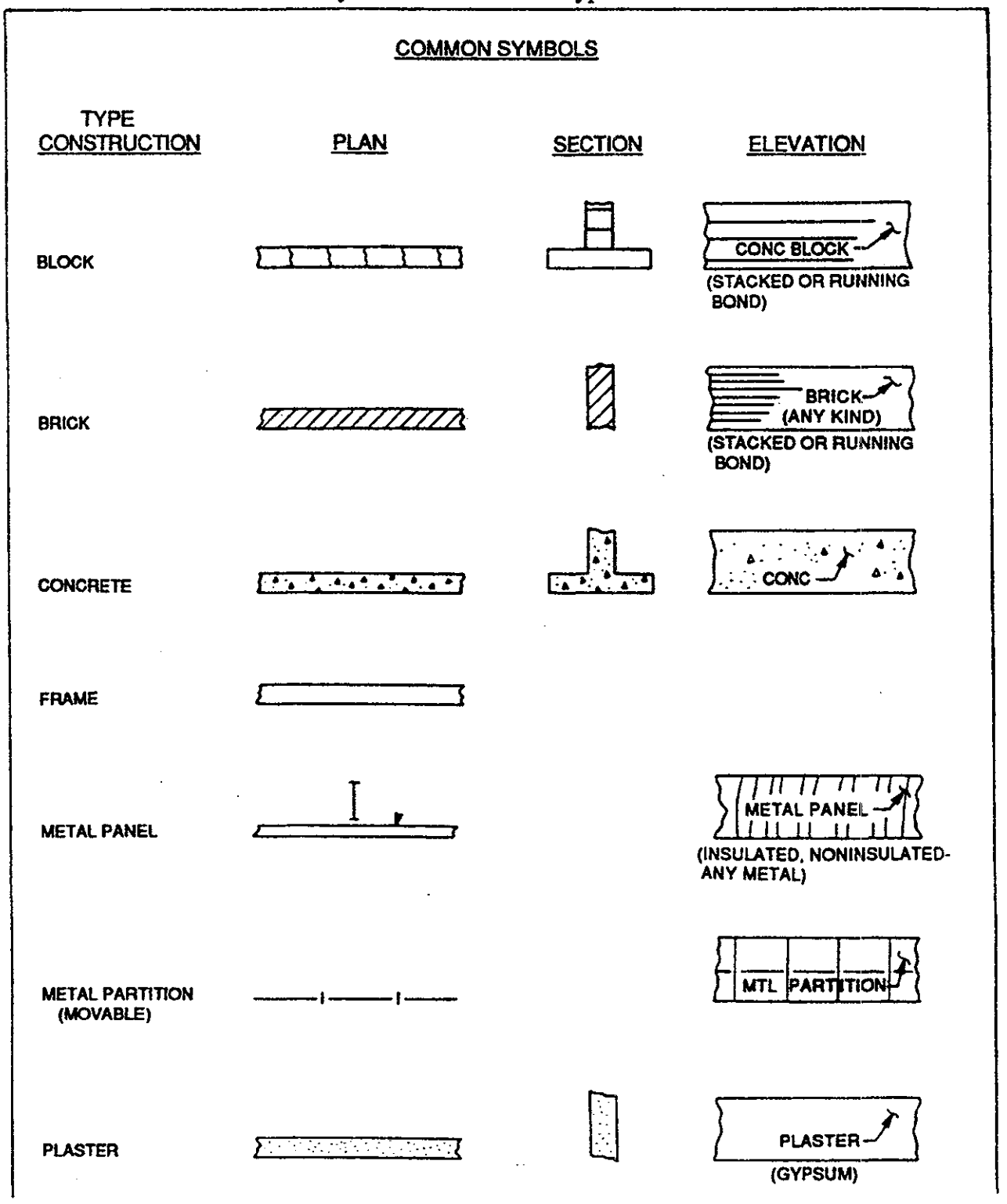

Table 6-1. Symbols for Common Types of Construction (cont)

MISCELLANEOUS SYMBOLS

ITEM/DESCRIPTION	SYMBOL
DOOR IDENTIFICATION	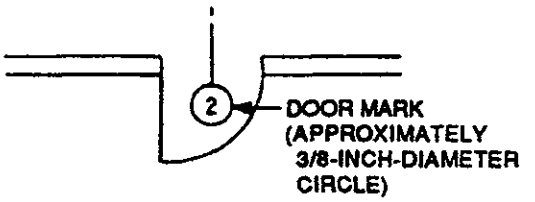
WINDOW IDENTIFICATION	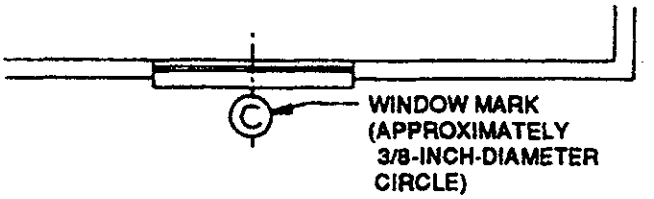
STAIR RUN	

Table 6-2. Symbols for Common Construction Materials

MATERIAL	SYMBOL
GLASS	
GROUT	
INSULATION	
LOOSE FILL OR BATT	
RIGID	
METAL	
ALUMINUM	
STEEL	
WALL MATERIAL	
CORRUGATED ASBESTOS	
INSULATED METAL WALL PANELS	
SHEETROCK (DRYWALL)	
WOOD	
FINISH	
NOMINAL OR FRAMING	
PLYWOOD	

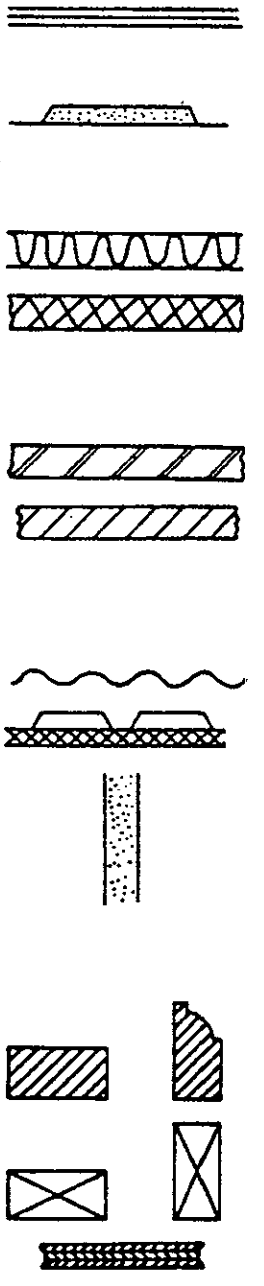

SECTION VII

STRUCTURAL DRAWINGS

7.1 SCOPE

This section defines the structural drawings prepared by or for the John F. Kennedy Space Center (KSC), NASA, and identifies the requirements for preparing these drawings.

7.2 DEFINITION OF STRUCTURAL DRAWINGS

Structural drawings delineate the method and detail required to construct buildings, bridges, manholes, and miscellaneous structures. These drawings establish the basis for the construction of the structural components of the facilities under consideration.

Structural drawings are of the following types:

a. Structural concrete

b. Structural steel

c. Structural aluminum

d. Structural timber

e. Composite construction combining any of the above into composite members reacting to stress

Structural shop drawings (steel and concrete fabrication and layout drawings) are not covered in this manual. When it is necessary to prepare drawings of this type, the practices and procedures are set forth in the following references:

a. Steel: American Institute of Steel Construction (AISC):
M013, Detailing for Steel Construction
M014, Engineering for Steel Construction

b. Concrete: American Concrete Institute (ACI):
ACI 315, Details and Detailing of Concrete Reinforcement

c. Timber: American Institute of Timber Construction (AITC):
Timber Construction Manual
Related wood-working manuals

d. Aluminum: Aluminum Association (AA):
SAS 30, Specifications for Aluminum Structures
(Generally used for drawing format, lists, and nomenclature)
AA manuals for material size and shapes

7.3 STRUCTURAL CONCRETE DRAWINGS

7.3.1 DEFINITION. Structural concrete drawings delineate foundations, walls, columns, pedestals, pads, pits, footings, tanks, basins, and other facilities components constructed of concrete. These drawings are the basis for which the forms are constructed to contain the concrete. They also delineate the size, spacing, and placement of the reinforcing steel and, if required, provide the reinforcement-bar bending details. Typically, the furnishing, bending, tagging, and delivery of reinforcing steel is done by others; however, should the delivery of reinforcing steel be required, reference should be made to the ACI manual for drafting practices and procedures to be followed. (See figure 7-1.)

7.3.2 FOUNDATION DRAWING.

7.3.2.1 Definition. A foundation drawing is prepared to delineate the foundation walls, footing, columns, pedestals, etc. This drawing conveys all the information required to construct these components. (See figure 7-2.)

7.3.2.2 Requirements. The following requirements shall apply to the preparation of a foundation drawing:

a. A small scale shall generally be used for the plan view of the foundation. Sections and details shall be drawn to a scale large enough to portray the concrete reinforcement and other data. The scale shall be noted and a scale indicator shown on the drawing.

b. A foundation plan shall show the foundation walls, columns, pedestals, etc., using solid lines. Footings for walls, columns, pedestals, etc., shall be shown by a dashed (hidden) line.

c. The elevation of the bottom of each footing shall be given {e.g., (-) 3200 mm [(-) 10'-6"]} with respect to an established reference elevation.

d. When column pedestals, etc., are used, a footing and column schedule shall be shown on the same sheet along with a typical footing and wall section. (See figure 7-3.)

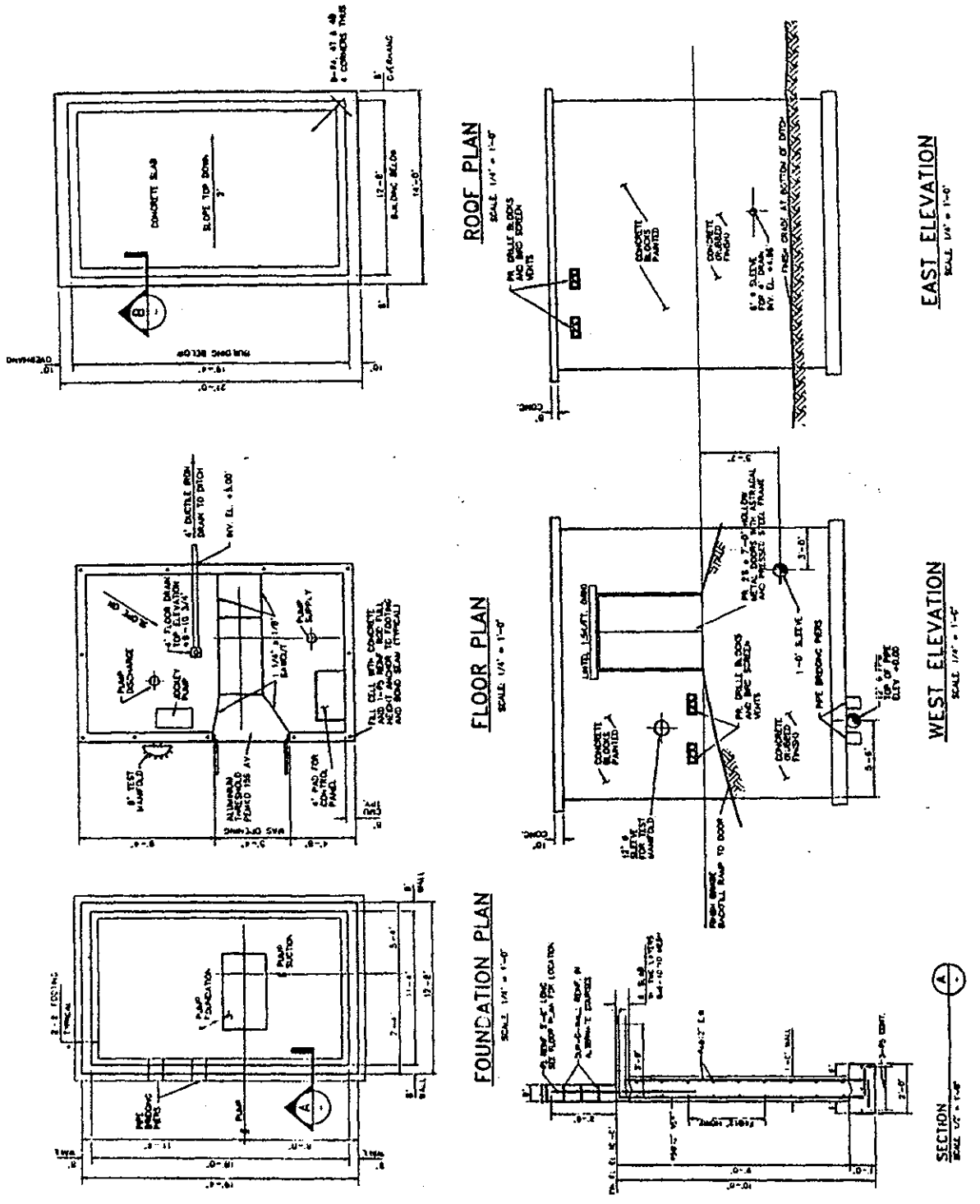

Figure 7-1. Structural Concrete Plan, Elevation, and Section

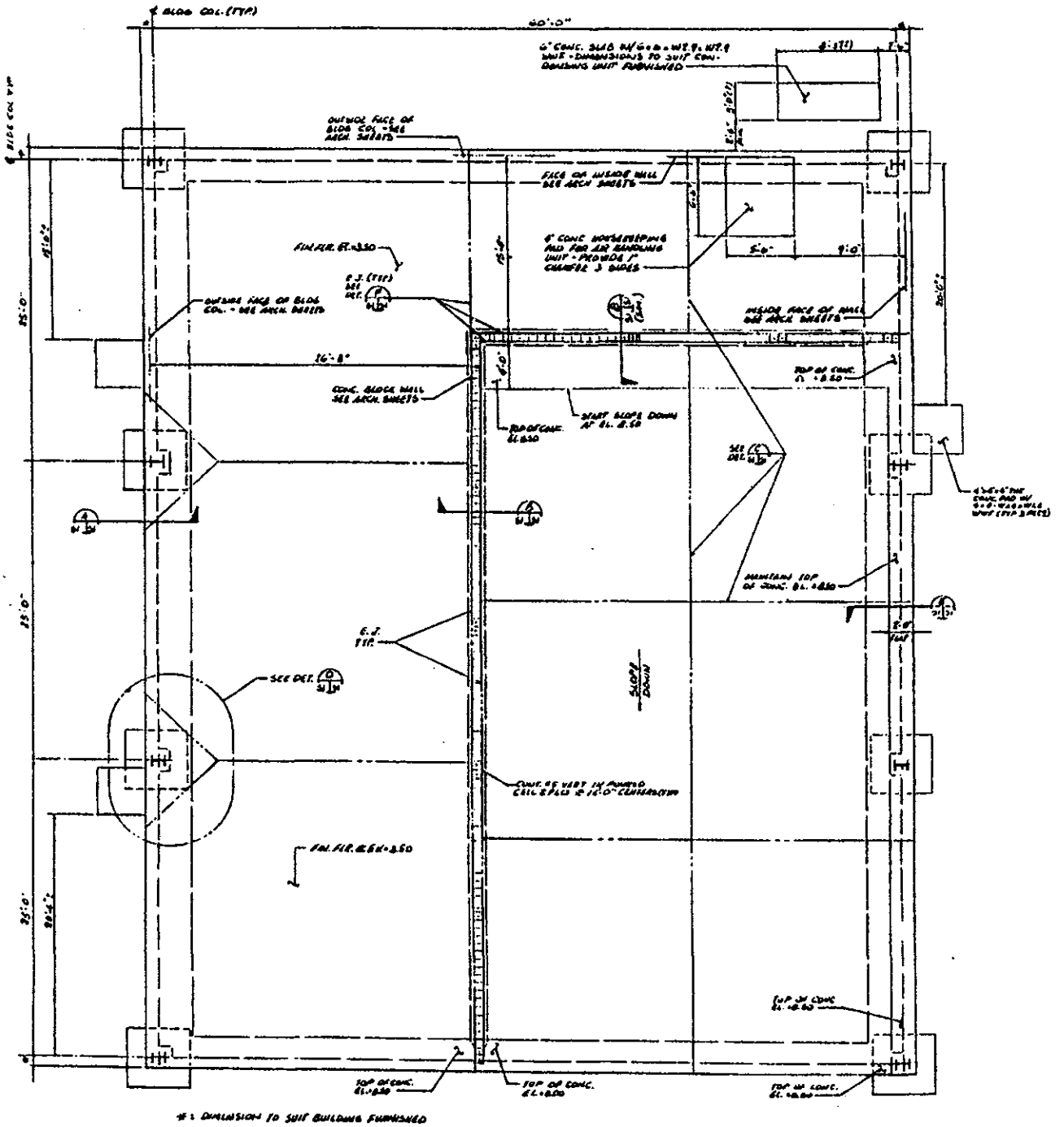

Figure 7-2. Foundation Plan and Details (Sheet 1 of 2)

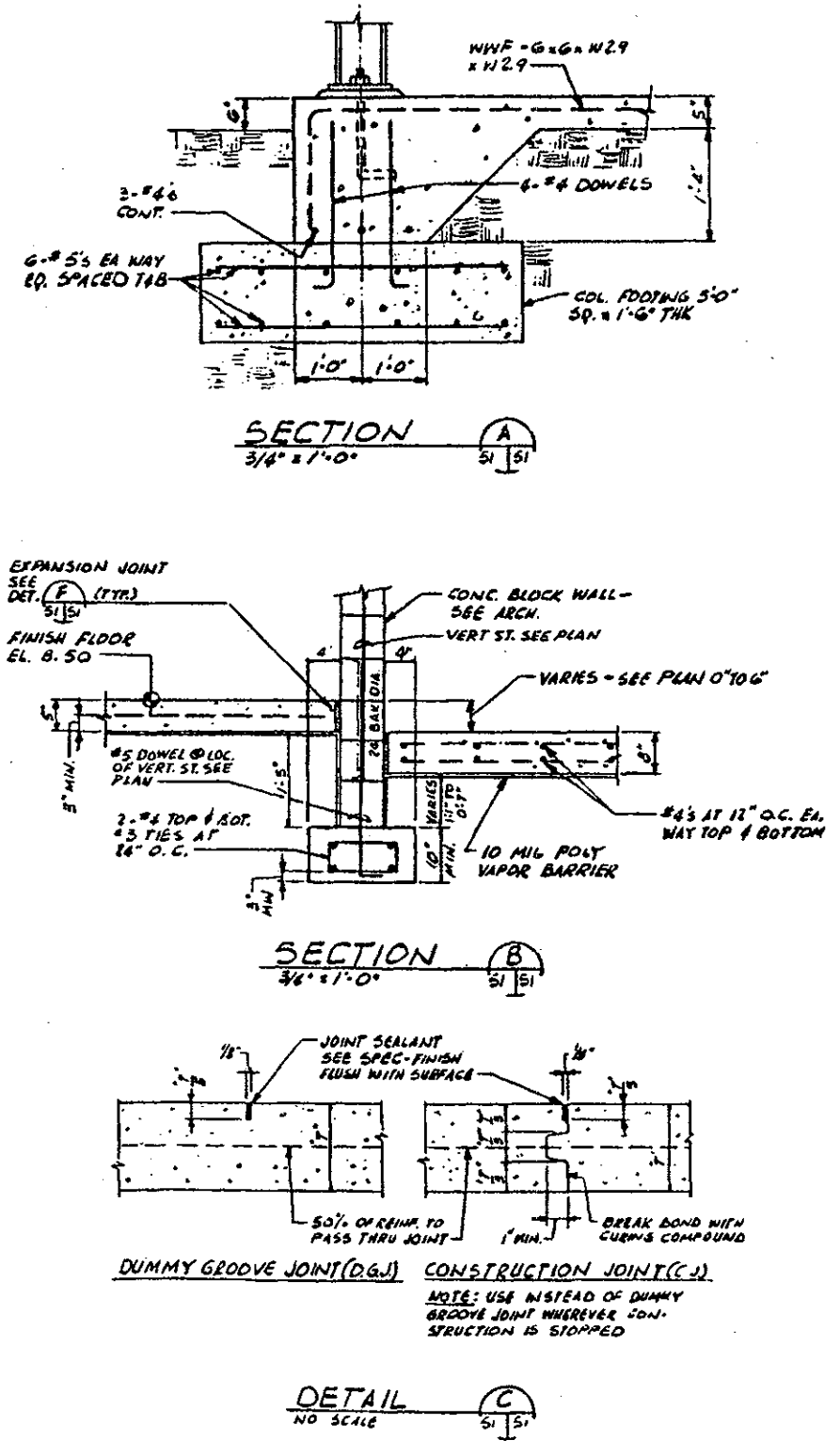

Figure 7-2. Foundation Plan and Details (Sheet 2 of 2)

FOUNDATION SCHEDULE A3

FOUNDATION TYPE	FOUNDATION DIMENSIONS A	B	C	D	EL. G	I	P	PROJ. G	GROUT R	FOUNDATION REINFORCING H	J	K	L	PIER TYPE	PIER REINFORCING M	N	REMARKS
F1	4'-6"	4'-6"	4'-6"	4'-6"	9'-6"	2'-0"	2'-6"		1 1/2"	#4 @ 12"	#4 @ 12"	#5 @ 12"	#5 @ 12"	1	#3 @ 6"	8 #7	
F1A	4'-6"	4'-6"	4'-6"	4'-6"								#5 @ 12"	#5 @ 12"	4	#4 @ 6"	18 #9	
F2	5'-6"	5'-6"	5'-6"	5'-6"								#6 @ 12"	#6 @ 12"	1	#3 @ 6"	8 #7	
F2A														4	#4 @ 6"	18 #9	
F2B														6	#4 @ 6"	28 #9	
F3	6'-6"	6'-6"	6'-6"	6'-6"	9'-0"	2'-6"				#6 @ 12"	#6 @ 12"			1	#3 @ 6"	8 #7	
F3A														4	#4 @ 6"	18 #9	
F3B														6	#4 @ 6"	28 #9	FOR COL's H,J22, SEE PIER TYPE 4
F3W					-4'-3"		15'-9"							1	#3 @ 6"	8 #7	
F3X					-1'-6"		13'-0"							1	#3 @ 6"	8 #7	
F4	5'-6"	5'-6"	5'-6"	5'-6"	9'-6"	2'-0"	2'-6"			#4 @ 12"	#4 @ 12"			1	#3 @ 6"	8 #7	SEE DETAIL ON DWG. S-024
F5	5'-6"	5'-6"	5'-6"	5'-6"	1'-0"	2'-0"	11'-0"			#4 @ 12"	#4 @ 12"			5	#4 @ 6"	18 #9	
F5A	12'-6"	12'-6"	8'-0"	8'-0"	9'-6"	4'-0"	2'-6"			#7 @ 12"	#9 @ 12"	#9 @ 12"		5	#4 @ 6"	18 #9	

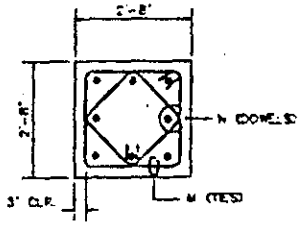

PIER TYPE 1
N.T.S.

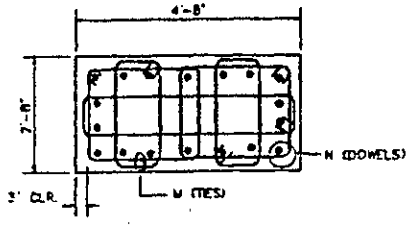

PIER TYPE 4
N.T.S.

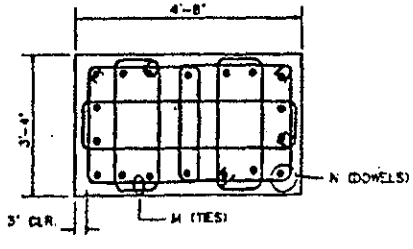

PIER TYPE 5
N.T.S.

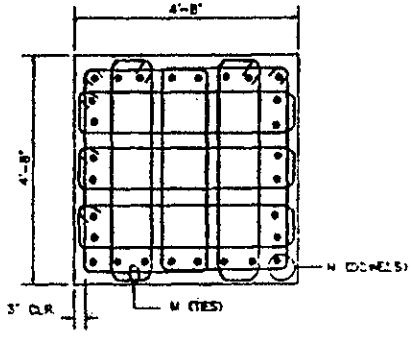

PIER TYPE 6
N.T.S.

Figure 7-3. Footing and Column Information

e. A separate footing plan delineating sizes, shapes, slopes, and other unusual requirements may be prepared for complex foundation systems.

f. When openings occur in foundation walls, they shall be located by dimension and their purpose noted (e.g., "Blockout for Door," "Construction Opening," etc.).

g. For additional detail drafting practices, refer to 7.3.5.

7.3.3 FLOOR PLAN.

7.3.3.1 Definition. A structural concrete floor plan is a horizontal projection through a structure showing the floor, walls, beams, columns, windows, sleeves, ducts, etc., as appropriate. (See figure 7-4.)

7.3.3.2 Requirements. The following requirements shall apply to the preparation of a floor plan:

a. The scale of the plan should preferably be the same as that used on the architectural plan. The scale shall be noted and a scale indicator placed on the drawing.

b. Floor plans shall be taken (cut) just above the desired floor line and titled with respect to an established elevation, {e.g., First Floor Plan, Finish Floor EL (+8 m) [(+) 26'-0"], or Plan at (+) 8 m [(+) 26'-0"]}. A key plan, if required, shall be shown indicating the area covered.

c. Walls, columns, curbs, stairs, etc., that extend above the floor line shall be shown using a solid line. Beams, walls, columns, and other supporting members that terminate at the floor line shall be shown, if appropriate, by a dashed (hidden) line.

d. All openings shall be dimensioned out-to-out of their formed or rough opening. Openings in walls occurring above the floor line, such as vent ducts, electrical and instrument openings, etc., are shown and noted with the bottom elevation given, {e.g., 1200 mm x 1200 mm DUCT OPNG BOT ELEV (+) 1300 mm [4'-0" x 4'-0" DUCT OPNG BOT ELEV (+)4'-3"]}.

e. Floor sleeves are shown and referenced to the appropriate drawing.

f. When the floor slopes, or portions of the floor are at different elevations from the titled referenced elevation, such elevation shall be noted, [e.g., assuming a title reference elevation as (+) 21'-0", TOP OF CURB ELEV (+) 21'-6", and FLOOR DRAIN (+) 20'-6"]. (See figure 7-4.)

g. When conventional beam and slab construction is utilized, all supporting members shall be given a designation such as B-1, G-2, etc., and all slabs shall be given a

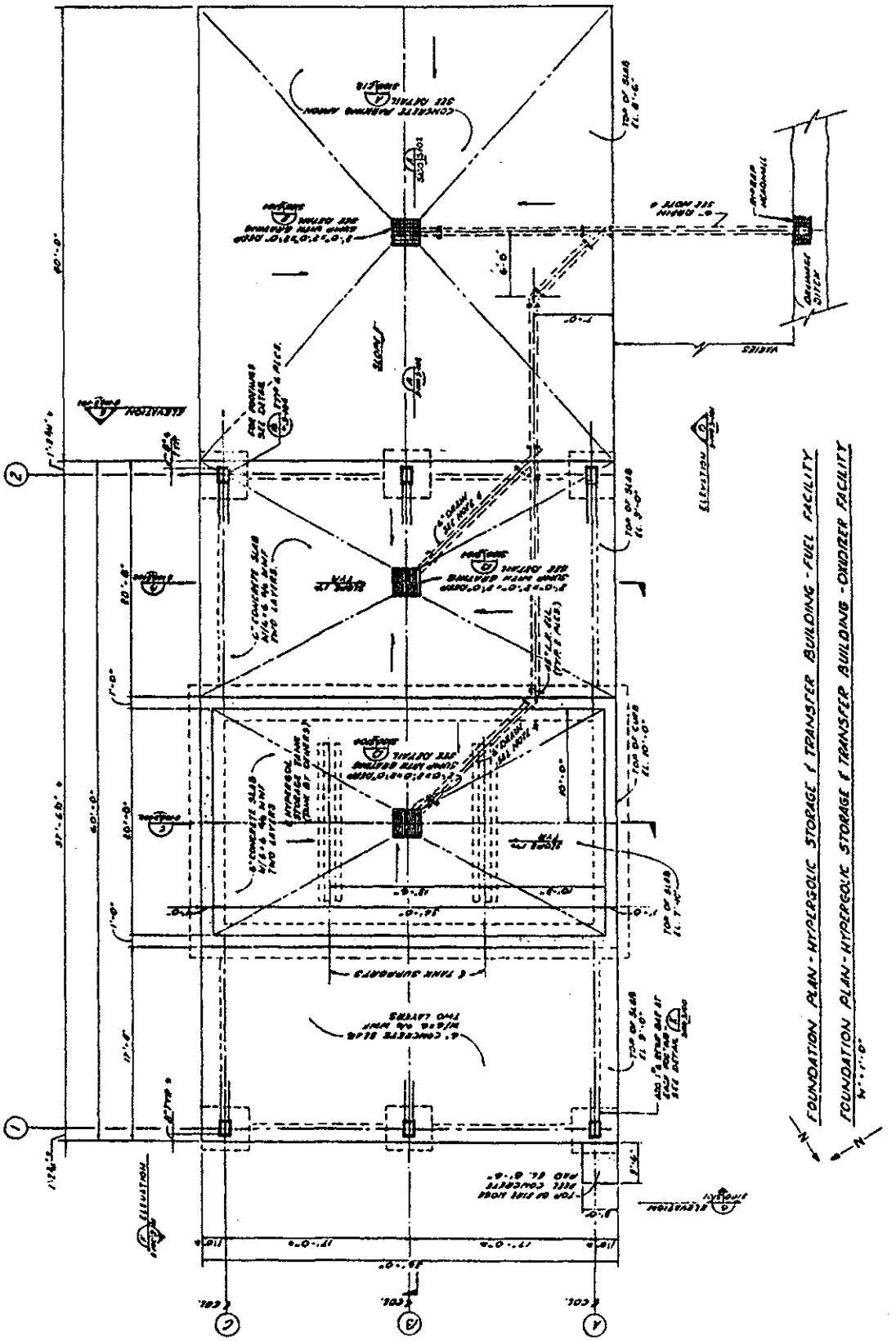

Figure 7-4. Structural Concrete Floor Plan

designation such as S-1, S-2, S-3, etc. The direction of the main reinforcing steel shall be indicated directly below the slab designation (e.g., S-2). (See figure 7-4.)

h. A concrete slab schedule, with reference to appropriate detail, shall support each plan indicating reinforced concrete slabs. (See figure 7-4.)

i. A beam and girder schedule, with reference to appropriate detail, may be used as required. (See figure 7-4.)

j. When flat-slab construction is utilized, the slab reinforcing is shown on the plan. Reinforcing shall be designated as to bar size, type, position in slab, and extent to which the slab is reinforced by any type of bar. (See figure 7-4.)

k. Stirrups shall be shown, as required, and a typical spacing shall be given in the beam and girder schedule. (See figure 7-4.)

l. Reinforcing for walls, columns, beams, etc., is not shown on the plan view as it appears in subsequent schedules and elevations; however, additional reinforcing, such as diagonal bars at corners of slab openings or other special conditions, is shown and called out as to quantity, bar sizes, location in slab, and length, [e.g., 2 #4 EF 1800 mm (2 #4 EF 6'-0" lg)].

m. See 7.3.5 for additional detail drafting practices.

7.3.4 ELEVATION.

7.3.4.1 Definition. A structural concrete elevation depicts vertical projections of buildings or structures showing interior and exterior walls, openings, recesses, pipe sleeves, anchor bolts, etc. (See figure 7-5.)

7.3.4.2 Requirements. The following requirements shall apply to the preparation of an elevation:

a. Elevations shall be drawn to the same scale as the plan view when feasible.

b. When the structure is a combination of structural concrete and other components such as structural steel, etc., the elevation shall show only the detail related to structural concrete.

c. Concrete below grade, including footings, shall be shown using a dashed (hidden) line. (See figure 7-5.)

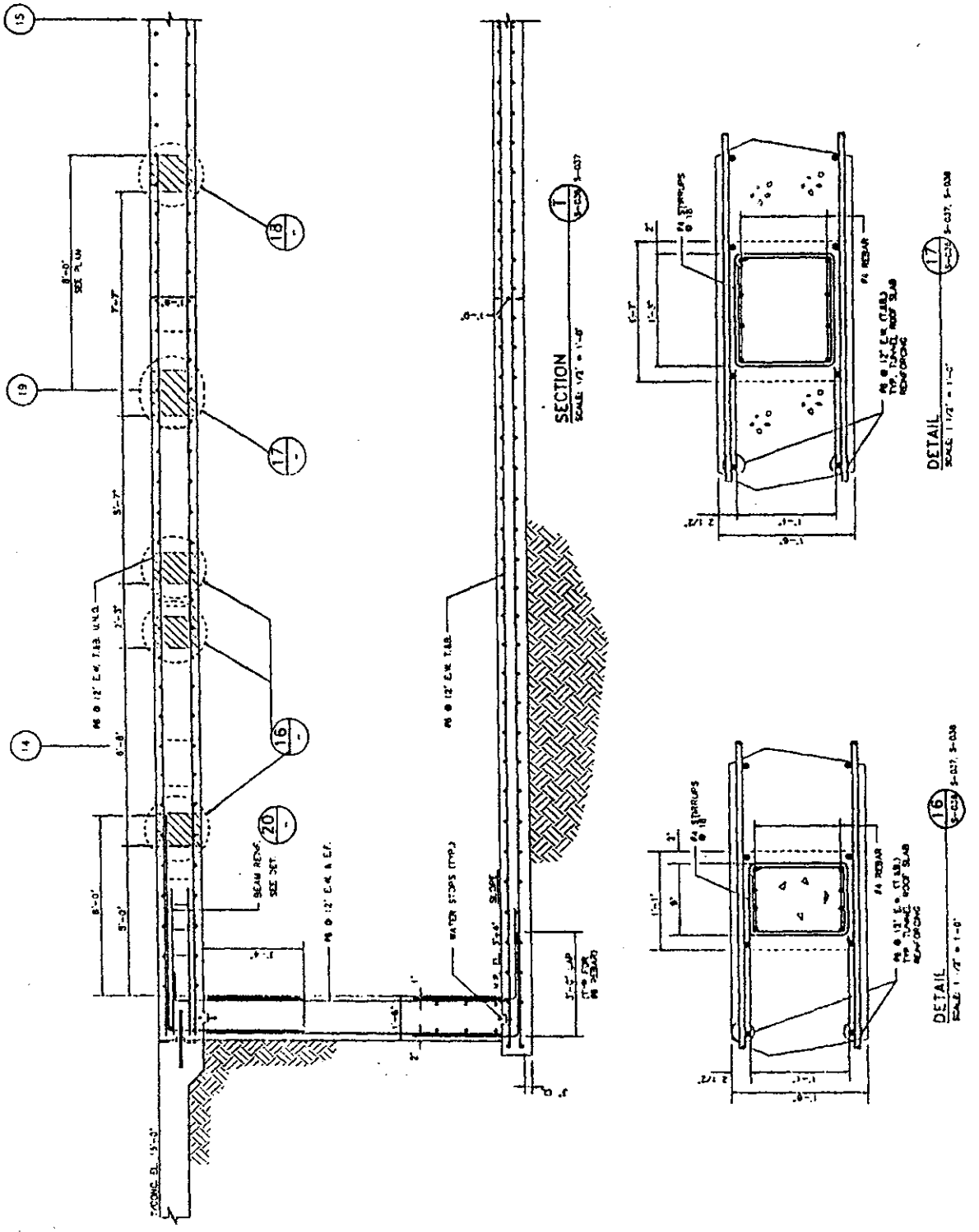

Figure 7-5. Floor Elevation and Section

d. All openings are shown and designated and horizontal, vertical, or diagonal reinforcing is indicated.

e. Elevations are noted for each floor, mezzanine, gallery, etc., on the elevation or section {e.g., 2nd FLOOR EL (+) 4400 mm, 2nd FLOOR EL [(+) 14'-6"]}. (See figure 7-5.)

f. Construction and control joints shall be indicated if applicable.

g. For additional practices, see 7.3.5.

7.3.5 GENERAL DETAIL DRAFTING PRACTICES. The following general detail drafting practices shall apply in the preparation of structural concrete drawings:

a. Dowels shall be detailed, including size and material, with the member to be poured first.

b. When detailing floor slabs with a thickness that is less than 150 millimeters (6 inches), clearance between reinforcement and other embedded items shall be adequate.

c. Reinforcement spacing shall be given in full millimeters (inches) whenever possible.

d. The position of the bars shall be shown. (Do not rely on construction specifications for minimum coverage.)

e. Slabs supported by steel beams shall be detailed with the bottom of the slab flush with underside of the top flange of the beam. (See figure 7-6.)

f. When a slab crosses a reinforced concrete beam, the beam section shall be shown to indicate the locating dimensions.

g. At intersections of a concrete beam and girder, sections of both shall be shown to indicate desired positions of reinforcement. Usually the girder steel is placed first, the beam steel second, and the slab steel last. Column verticals shall also be located.

h. Anchor bolts, lugs, inserts, corner angles, and all other miscellaneous components that are formed into the concrete are detailed giving material, size, length, projection, thread designation, and amount of thread on anchor bolts. Size, length, and connection of corner angles, etc., shall also be given.

i. When a column grid system is used (see 7.4.3), all locating dimensions shall be from established column lines. The column grid shall be shown on all plans, elevations, sections, and details as necessary for orientation.

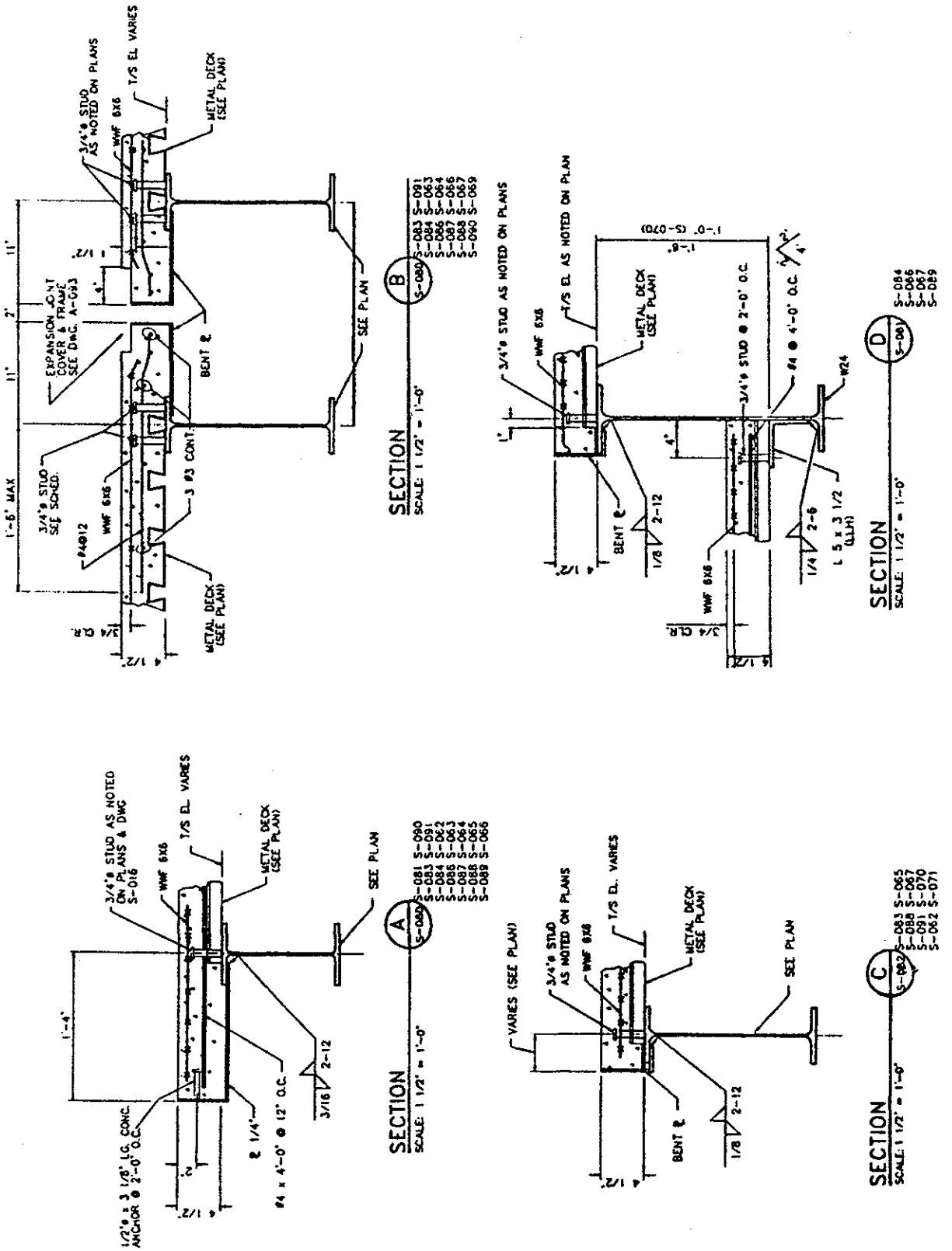

Figure 7-6. Typical Steel-Supported Slabs

j. Plan dimensioning shall indicate an overall dimension for out-to-out of concrete or building line. A dimension shall be given from out of concrete to center line of columns to out of concrete. Dimensions shall be given to locate exterior wall openings, interior wall lines, etc., and shall be tied to established column lines. Door, louver, and window openings shall be dimensioned out-to-out of their formed or rough opening. Walls are dimensioned to their centerlines with thickness shown. Sleeves, anchor bolts, ducts, etc., are dimensioned to their centerlines. Dimensions to show openings, offsets, extent, etc., of interior walls shall be from the outside face of the concrete or shall be tied to established column lines.

k. All vertical dimensions are tied to established floor elevations or the reference datum lines. When horizontal dimensions are required, they shall be tied to the outside face of the concrete or to established column lines.

l. When a column grid is not used, all dimensions are tied to the outside face of the concrete. For typical dimensioning, see figures 7-4 and 7-5.

m. Notes common to structural concrete drawings shall be placed on one sheet, if feasible, and the other sheets shall include the following note:
FOR GENERAL NOTES, SEE SHEET _____.

7.4 STRUCTURAL STEEL DRAWINGS

7.4.1 DEFINITION. Structural steel drawings delineate the location, size, and connection requirements for all structural steel members required for facilities. (See figure 7-7.)

7.4.2 REQUIREMENTS. Structural steel drawings shall delineate the construction requirements or provide criteria from which subsequent shop or fabrication drawings may be prepared by others. The size and material of rolled steel shapes, bolts, plates, and rivets shall be designated on structural steel drawings. In addition, welding requirements shall be indicated.

7.4.3 COLUMN GRID.

7.4.3.1 Definition. A column grid is a grid used to locate the centerlines of columns and appears on all drawings such as electrical, piping, architectural, reinforced concrete, etc., and serves as a basis for orientation and a series of datums from which components may be dimensionally located. (See figure 7-7.)

7.4.3.2 Requirements. The following requirements shall apply to the preparation of a column grid:

a. A thin centerline shall be used to show a column grid. (See figure 2-13.)

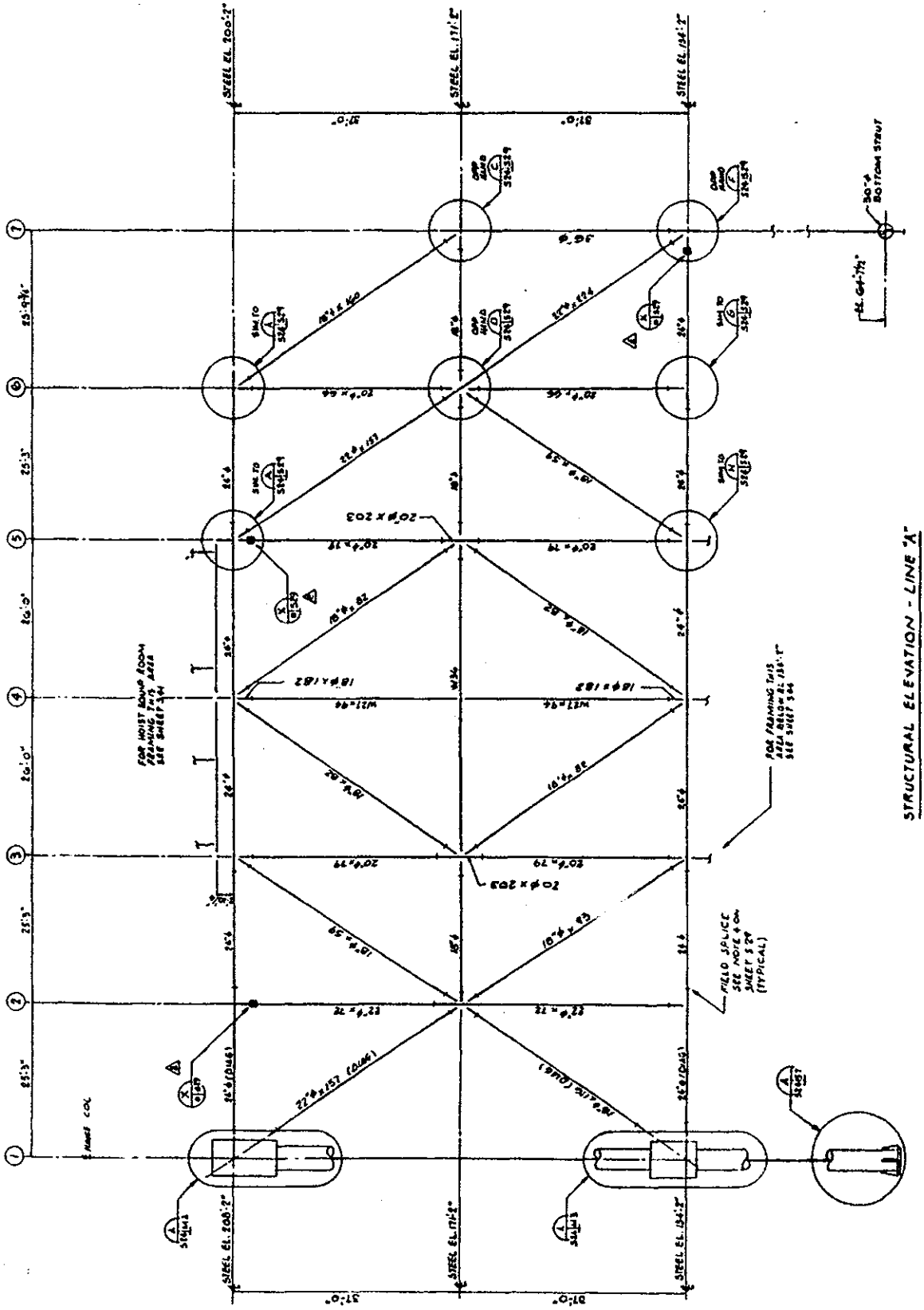

Figure 7-7. Structural Steel Drawing (Sheet 1 of 2)

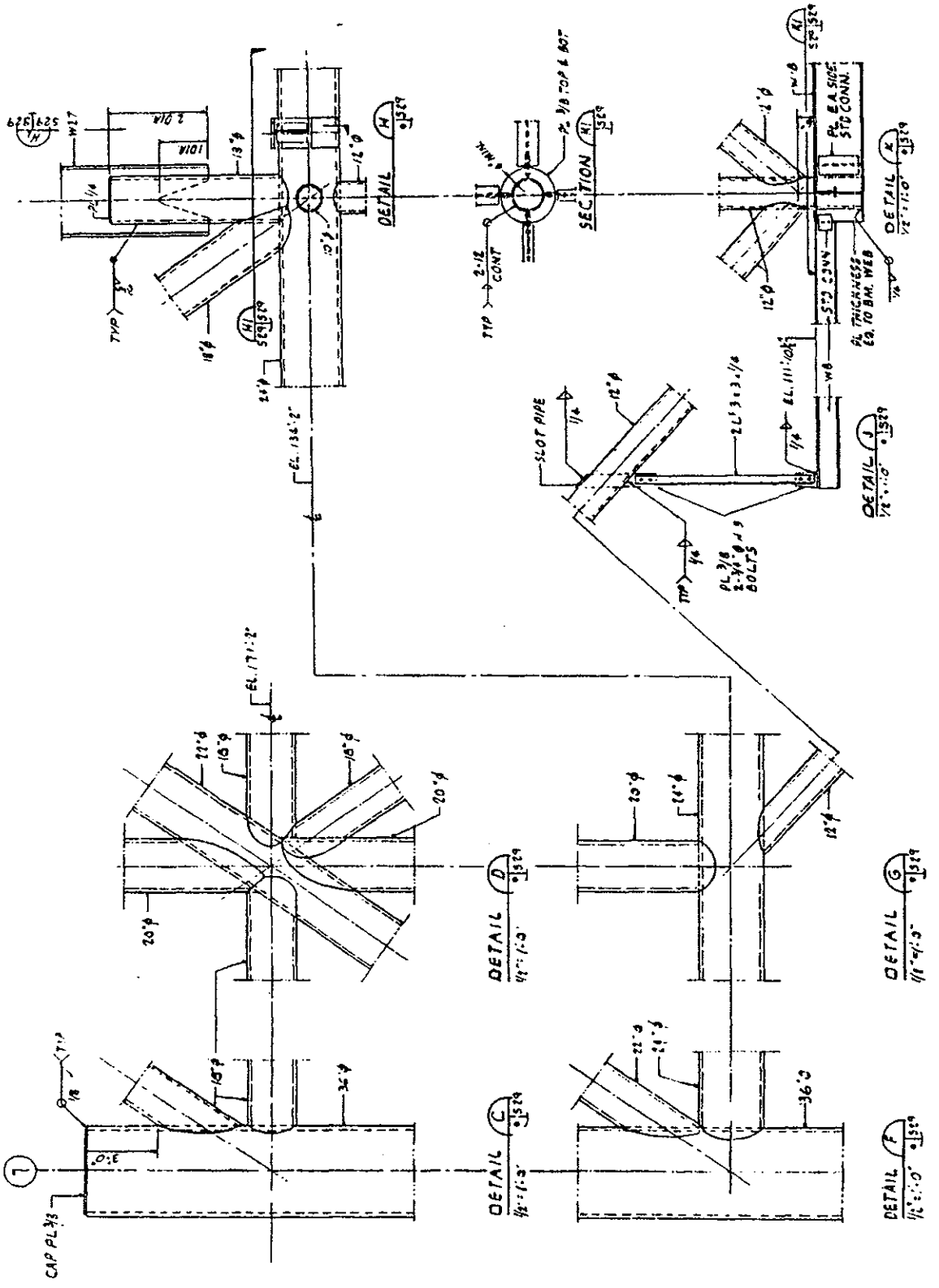

Figure 7-7. Structural Steel Drawing (Sheet 2 of 2)

b. The grid shall be numbered consecutively from left to right and lettered alphabetically from bottom to top. The letters I, O, Q, and X shall not be used.

c. Intermediate or secondary columns not on the main grid are designated by a whole number and a decimal horizontally, and by a capital and lower-case letter vertically. The following guide shall be used for determining these designations:

(1) The distance between two established main grid lines is visually divided into tenths, using the decimals .1 through .9 horizontally and vertically.

(2) Intermediate column is then given the designation of the main column to the left or to the bottom, plus the nearest tenth.

For example, a column occurring midway between established columns 1 and 2 horizontally and A and B vertically would be designated column 1.5 horizontally and A.5 vertically. (See figure 7-8.)

d. When preparing modification drawings for an existing facility, the previously established grid system shall be adopted and extended using the guidelines described above.

7.4.4 STRUCTURAL STEEL PLAN.

7.4.4.1 Definition. A structural steel plan is a horizontal projection through a structure showing the primary and secondary structural steel such as beams, girders, diagonal bracing, columns, bent plates, etc. (See figure 7-8.)

7.4.4.2 Requirements. The following requirements shall apply to the preparation of a structural steel plan:

a. The scale should preferably be no larger than that used on the architectural plan. The scale shall be noted and a scale indicator placed on the drawing.

b. All structural members shall be designated as to size, group, and weight and shown by a single, thick solid line on the center line of beam shapes and on the backs of channels and angles. All other components shall be shown as dashed (hidden) or phantom lines.

c. Plan views shall be drawn at the elevation of the top of the main framing steel, and the elevations shall be noted below the plan view in meters (feet and inches) to a reference datum. (See figure 7-8.)

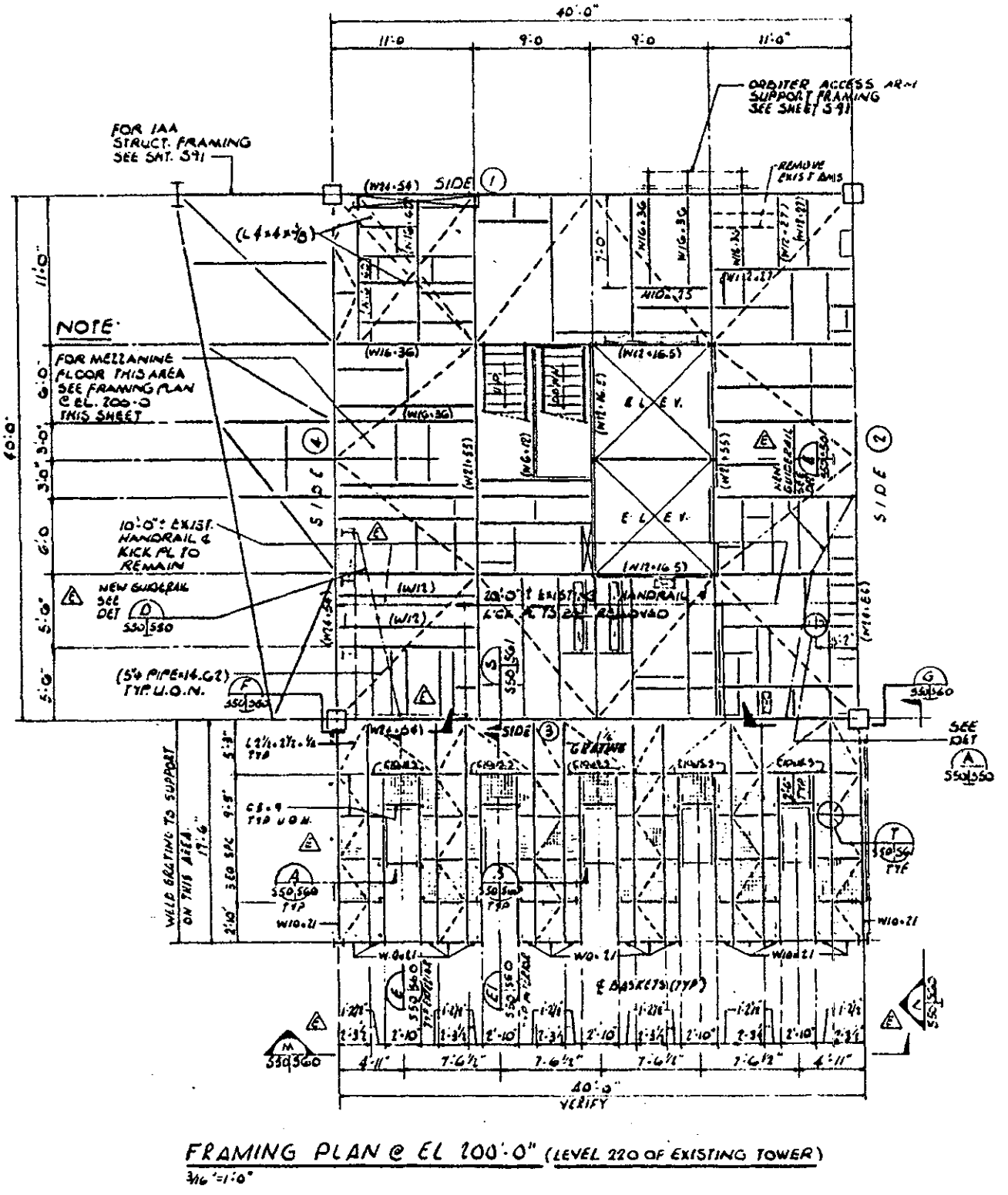

FRAMING PLAN @ EL 200'-0" (LEVEL 220 OF EXISTING TOWER)
3/16"=1'-0"

Figure 7-8. Typical Framing Plan

d. When a structural member is at a different elevation than the main framing steel, the "difference in elevation" shall be noted in parentheses following the size, group, and weight designation of that member [e.g., W150 x 29.8 (-50 mm), W6 X 20 (-2")]. (See figure 7-8.)

e. When structural members, except channels and angles, are shown on their minor axes, the elevation notes shall be to the center line of such members.

f. When a structural member is sloping, that member shall be noted following the size, group, and weight designation, (such as SLOPE) in parentheses [e.g., W6 X 20 (SLOPE)]. The elevation of a sloping member shall be noted in millimeters (feet and inches) from the elevation of the main framing steel.

g. A bent-plate schedule and appropriate details, as shown in figure 7-9, shall be shown in the drawing. Bent plates, which upon fabrication become an integral part of a beam, shall be indicated by the letter "P," followed by an identification number (e.g., P-1). The bent-plate designation shall become a part of the beam designation (e.g., W150 x 29.5 and P1, W6 X 20 and P-1).

h. When a grid system is used, a column schedule shall be incorporated in the drawing. (See figure 7-10.) A column schedule shall show column mark, column length, column splices, baseplate size, and the elevation of the top of the baseplate in meters (feet and inches) to the reference datum line. Also included on the column schedule will be typical baseplate details.

i. All nonstandard cuts and modified shapes shall be dimensioned. (See figure 7-11.)

7.4.5 FRAMING SECTION OR ELEVATION.

7.4.5.1 Definition. A framing section or elevation shows all primary and secondary structural members as applicable, including girts, struts, bracing, sag rods, etc. (See figure 7-12.)

7.4.5.2 Requirements. The following requirements shall apply to the preparation of a framing section or elevation:

a. The scale should preferably be the same as the scale used on the plan.

b. The exterior covering shall not be shown.

c. Members or parts of members embedded in concrete shall be shown by dashed (hidden) lines with the concrete outline shown by a phantom line.

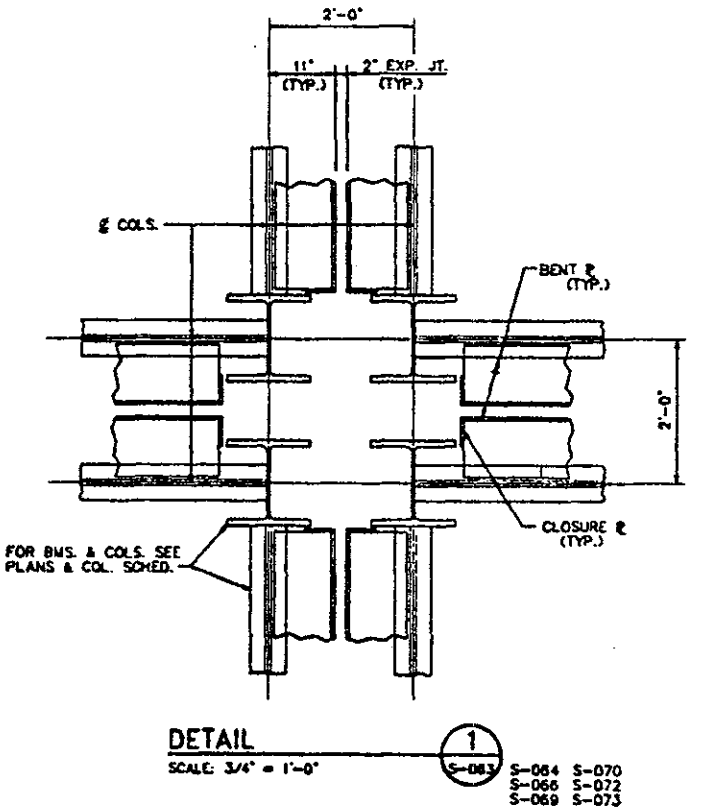

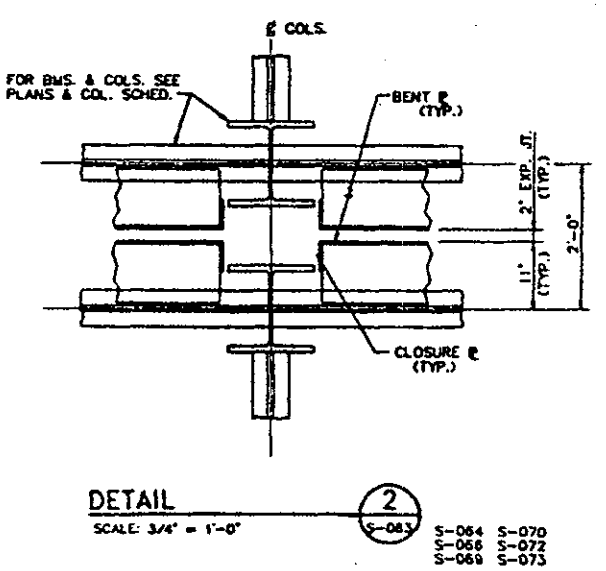

Figure 7-9. Bent-Plate Details

COLUMN MARK	J3	J4	J5	J6	J7	J8	J9	J10	J11	J11.1	J12	J13	J14	J15	J16	J16.9
W.P. EL. 65'-0"																
W.P. EL. 64'-0"																
SPLICE EL. 39'-2"	W12X40	W12X40	W12X40	W12X40	W12X40	W12X40	W12X40	W12X40	W12X40	W12X40	W12X40	W12X40	W12X40	W12X40	W12X40	W12X40
SPLICE EL. 37'-8"																
BOTTOM B/℄ EL. 14'-1 1/2"	W12X50	W12X58	W12X58	W12X53	W12X53	W12X53	W12X53	W12X53	W12X45	[illegible]	W12X53	W12X53	W12X53	W12X53	W12X53	W12X40
DL	64.4	118.2	109.7	91.9	103.3	99.8	89.3	92.9	59.7	58.8	93.6	97.5	104.7	97.1	95.6	51.4
DL + LL	109.6	210.7	194.8	160.8	182	174.8	157.4	163.6	101.3	98.5	163	170.4	183.4	170.5	167.9	91.2
WIND AXIAL S-N	-8.8	-18.4	-19.2	-16.7	-23.3	-10.5	-61	-8.9	-63.2	-61.01	-13.5	-14.8	-26.3	-12.5	-12.3	-17.6
WIND SHEAR S-N	-0.1	-0.2	-0.2	-1.2	1.4	1.3	-26.4	-0.2	-24.1	-30.2	-0.1	-0.1	-0.1	-0.1	-0.1	-0.1
WIND AXIAL N-S	-8.1	-16.7	-18.8	0.7	10.4	-4.1	68	-7.7	72.7	75.3	-9.5	-7.9	7.7	-11.2	-11.3	11.6
WIND SHEAR N-S	0.1	0.3	0.3	0.3	0.3	0.7	35.7	0.2	32.8	39.9	0.1	0.2	0.2	0.1	0.1	0.1
WIND AXIAL E-W	-8.7	-18	-34.2	-44.8	-35.1	-10.4	-22.4	-8.5	-17.2	-	-	-	-	-	-	-
WIND SHEAR E-W	-5.2	-0.1	-0.1	-27.1	-25.8	-18.7	-2.4	0.1	-3.6	-	-	-	-	-	-	-
CRANE LOAD AXIAL	-	-	-	-	-	-	-	-	-	-	-	-	-	-	-	-
CRANE LOAD SHEAR	-	-	-	-	-	-	-	-	-	-	-	-	-	-	-	-
3/4 (DL+LL+WL)	75.6	144.2	131.7	87.2	110.2	123.2	72.3	116.0	28.6	28.1	112.1	116.7	116.3	118.5	116.4	55.2
DESIGN LOAD	109.6	210.7	194.8	160.8	182	174.8	157.4	163.6	101.3	98.5	163	170.4	183.4	170.5	167.9	91.2
UPLIFT 3/4 (WL-DL)	-	-	-	-	-	-	-	-	-2.6	-1.65	-	-	-	-	-	-
BASE PLATE TYPE	11A	11A	11A	12	11	11A	11	11A	13	13	11A	11A	12	12	11A	13

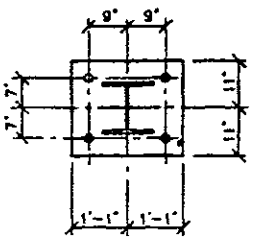

℄ 2 1/2 x 22 x 2'-2

BASE ℙ – TYPE 11 & 11A

SCALE: 1/2" = 1'-0"

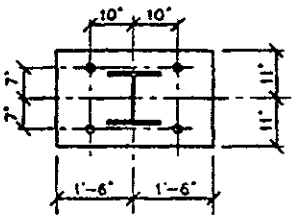

℄ 2 1/2 x 22 x 3'-0

BASE ℙ – TYPE 12

SCALE: 1/2" = 1'-0"

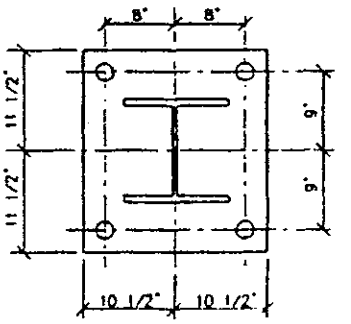

℄ 2 x 21 x 1' 11

BASE ℙ – TYPE 13

SCALE 1" = 1'-0"

Figure 7-10. Base-Plate Details and Schedule

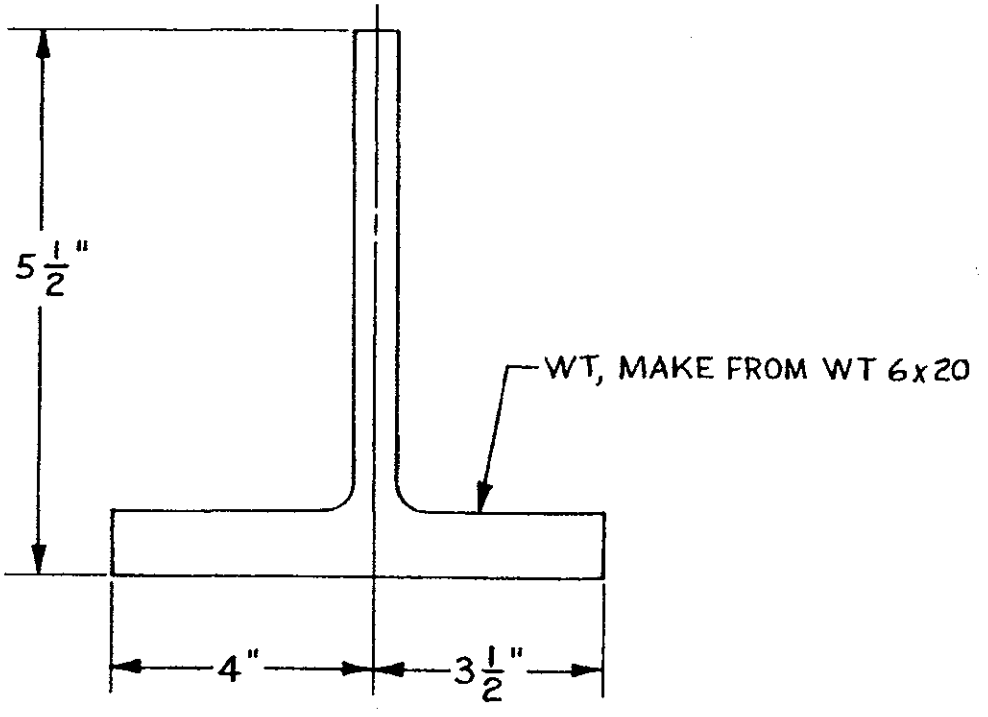

Figure 7-11. Example of Modified Shape Dimensioned

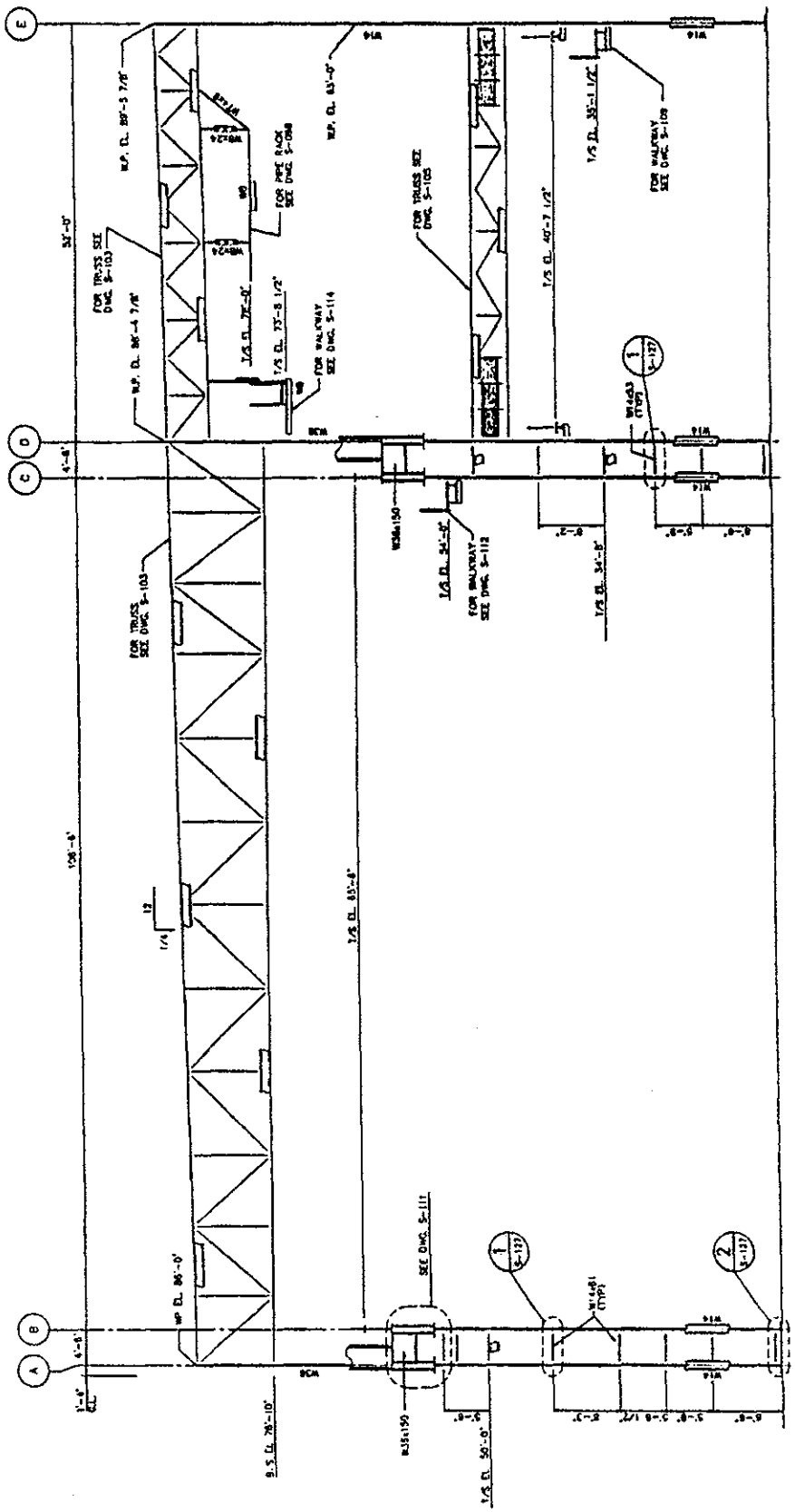

Figure 7-12. Elevation

d. Main framing structural steel, columns, and beams shall be shown in their entirety. No attempt shall be made to show flange or web thickness to scale, but it is required to indicate them to show column or beam placement.

e. Girts, bent plates, sag rods, bracing, etc., need not be shown in their entirety. It is sufficient to indicate each girt run by a dashed (hidden) line with only a short section of the actual girt imposed thereon to show correct placement. Each girt indication between columns will bear a size, group, and weight designation. (See figure 7-12.)

f. Bracing or sag rods using rolled shapes shall be shown the same as girts (see item e), except when the placement orientation is of no importance; then a dashed (hidden) line with the size, group, and weight designation will suffice.

g. Bracing or sag rods using round bars shall be shown by a dashed (hidden) line only, with the appropriate designation as to the diameter of the bars and to miscellaneous attachments such as turnbuckles.

h. Bent plates shall be indicated by showing only a short section of the plate at each beam level where the bent plate is attached. The beam to which the bent place is attached shall be identified. (See figure 7-8.)

i. Members that have been shown on plan views shall be identified by size and group designation only; no weights shall be repeated.

j. Members previously shown in the plan and to which a bent plate is attached shall be identified by size and group designation followed by the proper bent-plate designation (e.g., W360 x 39 and P1, W14 x 26 and P1).

k. Horizontal members, such as girts, struts, etc., shall be dimensioned vertically. Dimensions shall be from the top of the flange to the top of the flange for beam and channel shapes on their major axes, from back to back on angles and channels on their minor axes, and from center line to center line for beam shapes on their minor axes and for structural tee shapes. All vertical dimensions shall be tied to an established roof or floor elevation or to the reference datum line. (See figure 7-12.)

l. Horizontal dimensions shall be used to show girt or building lines, door openings, window openings, etc. Column grid spacing should not be dimensioned on framing sections or elevations; however, all horizontal dimensions shall be tied to an established column grid line. (See Figure 7-12.)

7.4.6 CONNECTIONS AND DETAILS.

7.4.6.1 Definition. Connections and details supplement the plans and elevations and provide information complete enough so that shop drawings can be prepared without resorting to information from architectural, mechanical, and other drawings.

7.4.6.2 Requirements. The following requirements shall apply to the preparation of connections and details:

a. Identify all members by their size, group, and weight.

b. The actual dimensions of the member shall be used rather than the nominal dimensions.

c. Standard drill and punch gages for columns and beams and the usual gages for angles as shown in the applicable AISC Manual of Steel Construction, M011 or M015, shall be observed.

d. When detailing welded connections, the size, type, and extent of the weld shall be shown. Reference to the specification shall be made if applicable.

e. When standard beam connections (as shown in the applicable AISC Manual of Steel Construction, M011 or M015) are used, they shall be called out by the AISC document table number in the general notes.

f. When detailing angles with bolted or riveted connections, the working line shall be usual gage line. When detailing angles with welded connections, the working line shall be the X-X or Y-Y axis.

g. When beams are coped, cut, or blocked to provide clearance for beams, connections to beams, or columns, they shall be as shown in figure 7-13 or as specified in AISC M013, Detailing for Steel Construction.

h. An example of miscellaneous structural details is shown in figure 7-14.

7.5 SYMBOLS FOR STRUCTURAL DRAWINGS

The following list of symbols provides coverage of drawings pertaining to reinforced concrete, structural steel, and timber construction. For convenience, symbols have been grouped under various headings. The application of symbols is not limited to this grouping; any symbol may be used with any other group of symbols.

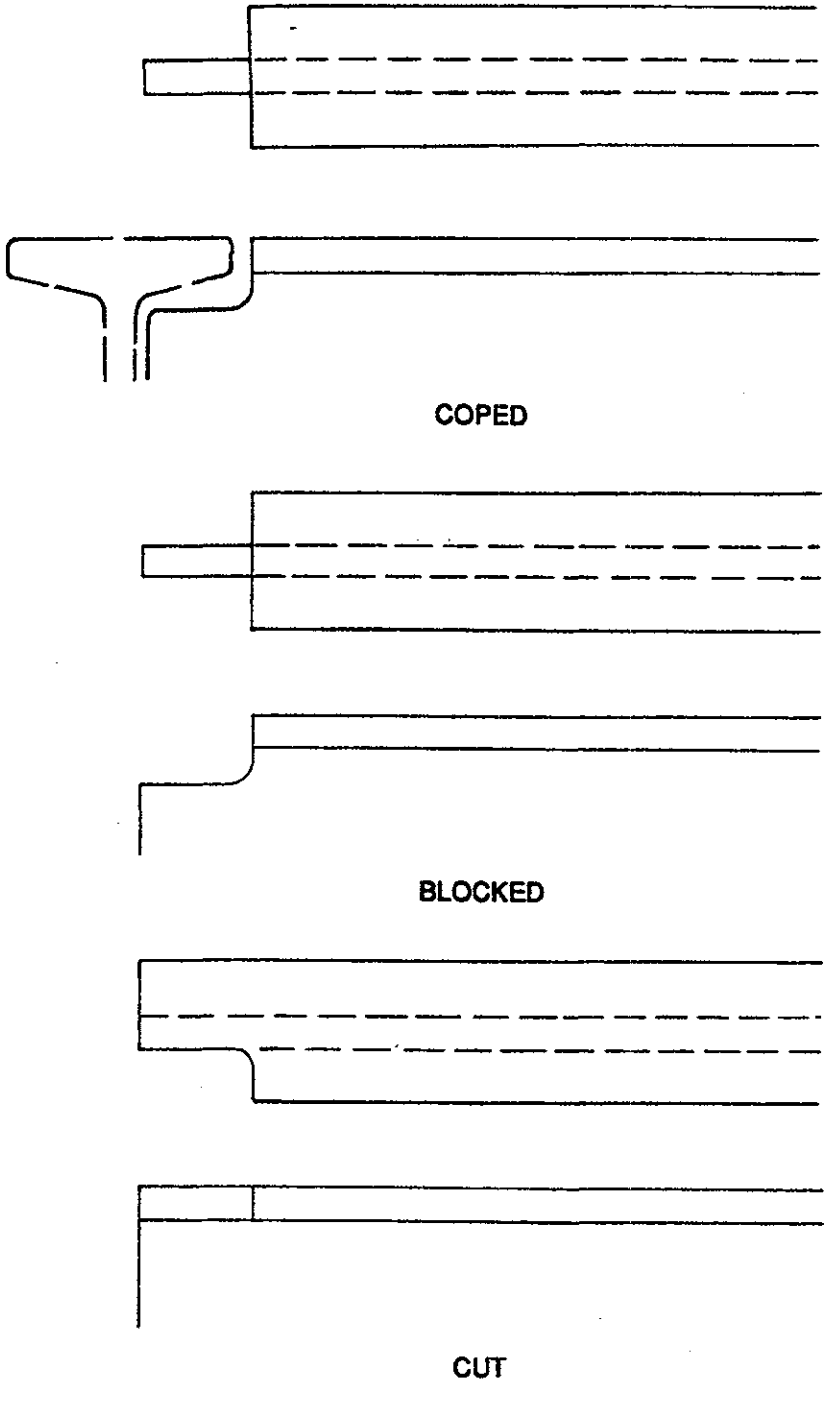

Figure 7-13. Examples of Coped, Blocked, and Cut Beams

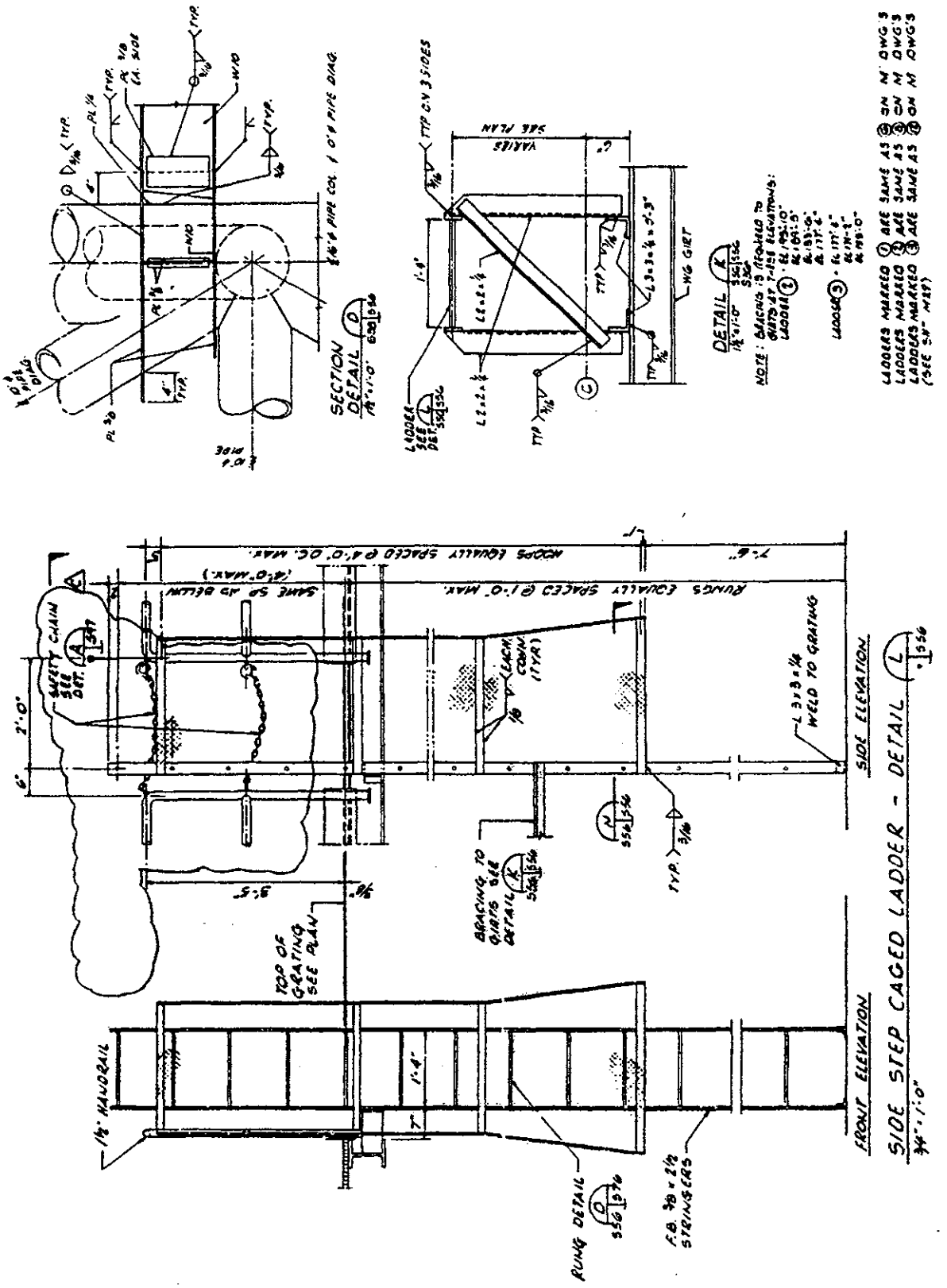

Figure 7-14. Miscellaneous Structural Details

7.5.1. SYMBOLS FOR GENERAL USE. The following symbols are for use on drawings depicting all types of construction:

a.	Tensile stress in a member	+
b.	Compressive stress in a member	-
c.	Pounds	LBS
d.	Number	#
e.	Kip (1000 pounds)	K
f.	Feet	'
g.	Inches	"
h.	Angular measurements	
	(1) Degrees	DEG or °
	(2) Minutes	MIN or '
	(3) Seconds	SEC or "
i.	Deflection	Δ
j.	Modulus of elasticity	E
k.	At	@
l.	Percent	%
m.	By	x
n.	Round	Ø
o.	Square	❑

7.5.2 REINFORCED CONCRETE CONSTRUCTION SYMBOLS. When designating reinforced concrete shapes on drawings, only standard nomenclature and abbreviations shall be as shown in ACI 315.

7.5.3 SYMBOLS FOR ROLLED SHAPES. When designating rolled steel shapes on drawings, only standard nomenclature and abbreviations shall be used as shown in the AISC Manual of Steel Construction. Table 7-1 shows examples of hot-rolled steel shape designations.

7.5.4 SYMBOLS FOR COMBINATIONS OF STRUCTURAL SHAPES. Except for those shapes for which the symbol is a letter or letters, symbols for single structural shapes may be combined to indicate the composition of a built-up member. For instance, a double-angle strut may be represented by ⊓⊓; and a channel and angle section be represented by ⊐⊓. Where a combination includes a shape, the symbol for which is a letter or letters, a line representation of the shape may be used; for instance, in the case of a wide-flange beam and a channel, the representation may be ⊓⊐. The representation in each case may be accompanied by the sizes of the shapes involved, ⊐ W24 x 76
⊐ 2 PL 1/2 x 18.

7.5.5 TIMBER CONSTRUCTION SYMBOLS. When designating timber shapes on drawings, only standard nomenclature and abbreviations shall be used as shown in the AITC Timber Construction Manual.

7.5.6 FLAT-ROLLED METALS - THICKNESS CALLOUTS. Flat-rolled metal shall have its thickness called out in millimeters only for metric dimensioned materials, or as specified below for nonmetric dimensioned materials.

a. Carbon steel

(1) Bar - 6 inches or less width, 0.230 inch and over in thickness: thickness callout in fractions

(2) Plate - over 6 inches to 48 inches in width, 0.230 inch and over in thickness: thickness callout in fractions

(3) Sheet - over 12 inches in width, under 0.230 inch in thickness: thickness callout by gage

b. Stainless steel

(1) Bar - 1/4 inch to 10 inches in width, less than 3/16 inch in thickness: thickness callout by gage

(c) Galvanized or coated steel: thickness callout by gage

Table 7-1. Abbreviations and Symbols for Hot-Rolled Structural Steel Shape Designations

Description	Type of Shape	
	Metric	U.S. Customary
American standard channel	C310 X 31	C12 X 20.7
Equal leg angle	L152 X 152 X 19.0	L6 X 6 X 3/4
Flat bar	Bar 64 X 13	Bar 2-1/2 X 1/2
HP Shape	HP360 X 108	HP14 X 73
M shape	M200 X 28 M250 X 13	M8 X 18.5 M10 X 9
Miscellaneous channel	MC310 X 67	MC12 X 10.6
Pipe	Pipe 102 Std. Pipe 102 X - Strong Pipe 102 XX - Strong	Pipe 4 Std. Pipe 4 X - Strong Pipe 4 XX - Strong
Plate	PL13 X 27	PL1/2 X 18
Round bar	Bar 32 ⌀	Bar 1-1/4 ⌀
S shape	S610 X 149	S24 x 100
Square bar	Bar 25 ⊡	Bar 1 ⊡
Structural tee, cut from S shape	MT 100 X 14	MT5 X 4.5 MT4 X 17.15

Table 7-1. Abbreviations and Symbols for Hot-Rolled Structural Steel Shape Designations (cont)

Description	Type of Shape	
	Metric	U.S. Customary
Structural tee, cut from S shape	ST 305 X 74.5	ST12 X 50
Structural tee, cut form W shape	WT 305 X 56.5	WT7 X 13
Structural tubing, circular	TS 750 OD X 6	TS3 OD X .250
Structural tubing, rectangular	TS127 X 76 X 9.5	TS5 X 3 X .375
Structural tubing, square	TS102 X 102 X 9.5	TS4 X 4 X .375
Unequal leg angle	L152 X 102 X 15.5	L6 X 4 X 5/8
W shape	W610 X 113	W14 X 26

(d) Aluminum

(1) Plate - 1/4 inch and over in thickness: thickness callout in fractions

(2) Sheet - under 1/4 inch in thickness: thickness callout in decimals

(3) Bar - rectangular bar stock width: thickness callout in fractions

SECTION VIII

MECHANICAL DRAWINGS

8.1 SCOPE

This section defines the mechanical drawings normally prepared by or for the John F. Kennedy Space Center (KSC), NASA, and identifies the requirement for preparing these drawings.

8.2 DEFINITION OF MECHANICAL DRAWINGS

Mechanical drawings delineate piping to convey solids, liquids, or gases; the construction details for mechanical devices and air-conditioning installations; and the construction details for tanks, fire protection systems, etc. These drawings establish the requirements for construction and planning of interrelated elements of the facility design including pertinent services, equipment, and other features required to ensure the performance of the mechanical equipment. These drawings incorporate dimensions, symbols, reference to codes, conventions, schedules, diagrams, etc., in describing the size and routing of pipes, the kind of material to be used, equipment criteria, duct sizes and shapes, amount of flow and the temperature of material in pipes and ducts, valve types and location, floor and wall penetrations, tank construction, and other facets of mechanical design.

8.3 FLOW DIAGRAM

8.3.1 DEFINITION. A flow diagram shows piping or duct circuits, functional components, and equipment included in the system. The purpose of a flow diagram is to convey such design information as input conditions, the condition changes within the system, and the outputs. It also serves as a basis for detail design drawings, maintenance, operator training, and as an aid in the construction of the facility. A flow diagram for an air-conditioning system, for example, may indicate the quantity of air handled [usually noted in cubic meters per second (cubic feet per minute) at standard pressure and temperature] including fresh air and recirculated air, the wet and dry bulb temperatures, the condition of the air entering the treating equipment, the heat added or rejected, the source or disposal of the heat, the change in dry-bulb and wet-bulb temperature of the air, the quantity of steam or hot water supplied, the temperature of water entering and leaving the heat exchanger, the refrigeration-machine condenser water supply, the cooling-tower water conditions, and design conditions for air, the tower blowdown, and the boiler. (See figure 8-1).

8.3.2 REQUIREMENTS. The following requirements shall apply when preparing a flow diagram:

a. Where feasible, the flow diagram shall include the instrumentation. In those instances when it is desirable to prepare a separate instrument diagram (see 8.3.3), the flow

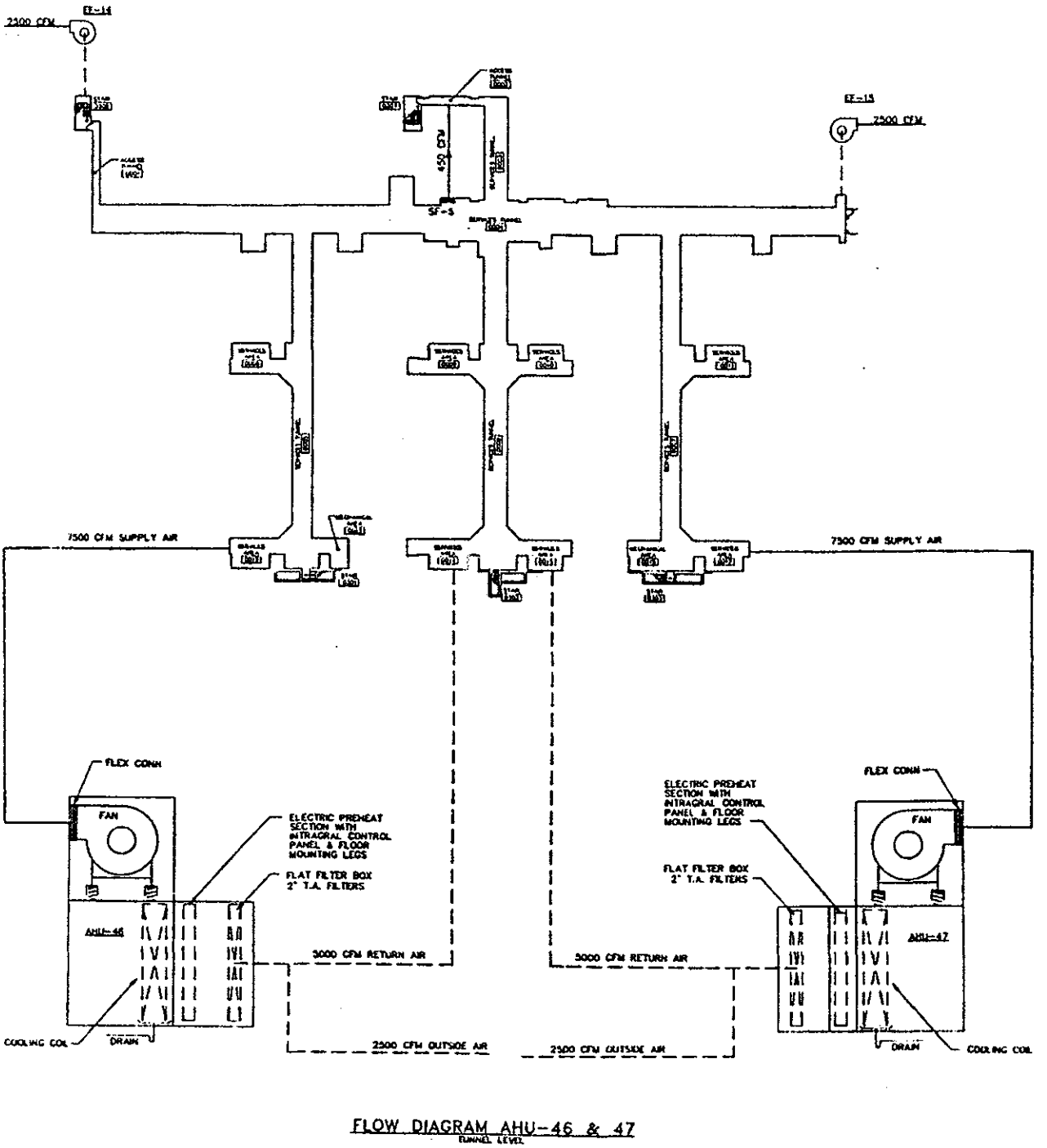

FLOW DIAGRAM AHU-46 & 47
TUNNEL LEVEL

Figure 8-1. Mechanical Flow Diagram

diagram shall show only that portion of the flow required to identify the instrumentation.

b. The piping and instrument control lines shall be shown in single-line, diagrammatic form, using symbols for valves, pumps, coils, and instrumentation. (See figures 8-1 and 8-2.) (Refer to KSC-STD-152-1 for symbols.)

c. Equipment shall be shown in simple outline form. Piping connections shall be indicated in approximately the correct location such as the top, bottom, or side of a vessel. (See figure 8-2.) If the equipment (vessels, pumps, agitators, etc.) is located within a space and the instrumentation located elsewhere, it shall be indicated on the flow diagram.

d. The flow lines shall bear the line number, if applicable, the pipe size, pipe code, or reference to the specification. If all lines are covered by one code or specification, reference to the specification may be included in the general notes and omitted at the line location. (See figure 8-2.)

e. Valve symbols, code, or specification notes shall indicate whether a valve is remotely or manually operated, whether the actuation is by air, electricity, or other means, and whether a valve is normally open or closed.

f. Whenever practical, lines carrying liquid shall have direction of flow indicated by arrowheads, thus:

g. Distinction between new and existing facilities shall be made by indicating all new work with bold lines and all existing facilities in light lines, as shown in figure 8-3.

8.3.3 INSTRUMENT DIAGRAM.

8.3.3.1 Definition. An instrument diagram describes the flow variables measured such as pressure drop, flow, temperature, etc. Also included is the identification of the instruments to be used in the measurements. In addition, the equipment and lines which are controlled, measured, or operated by instruments are shown in schematic form. (See figure 8-4.)

8.3.3.2 Requirements. The following requirements shall apply when preparing an instrument diagram:

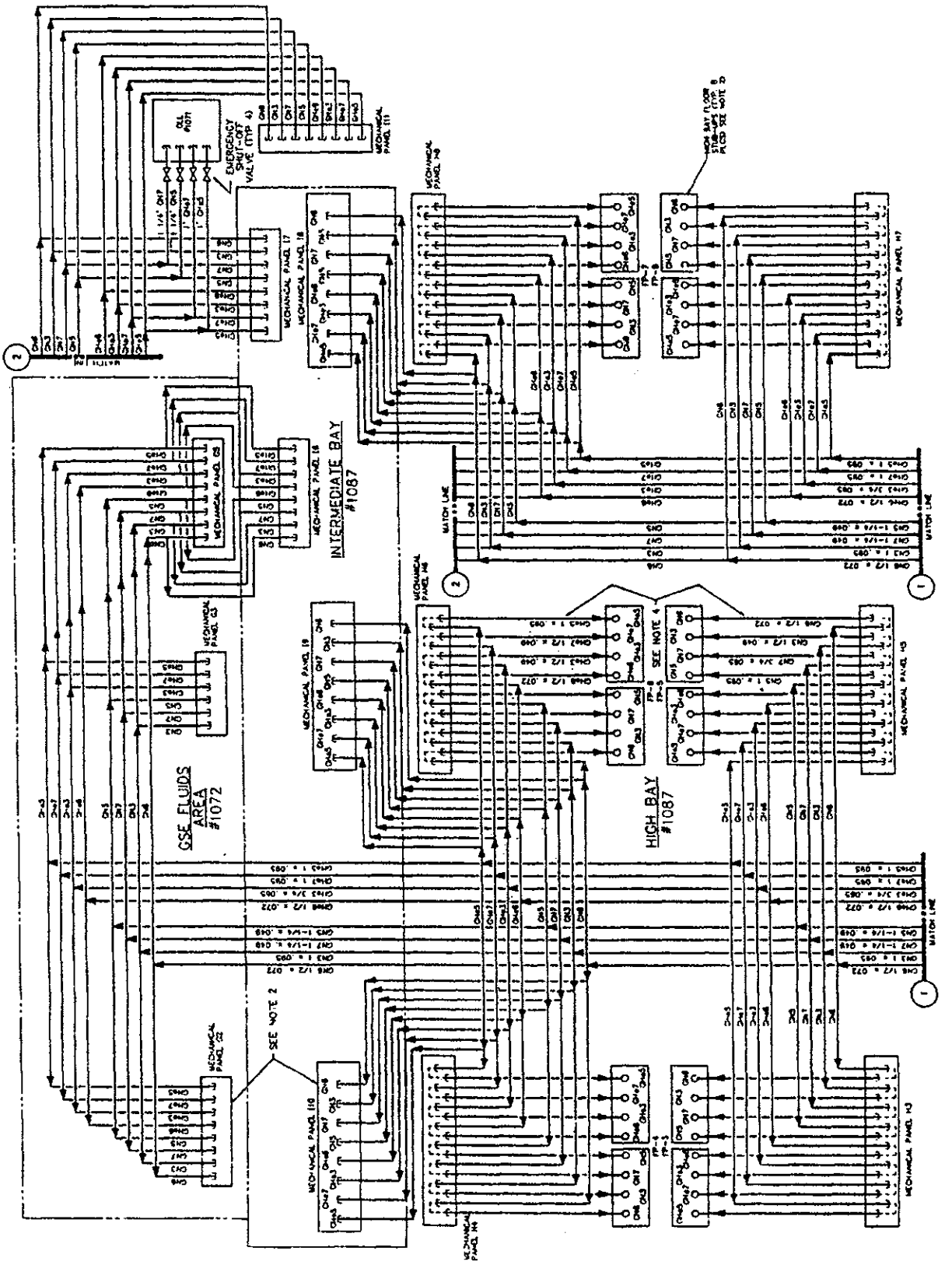

Figure 8-2. Flow Diagram

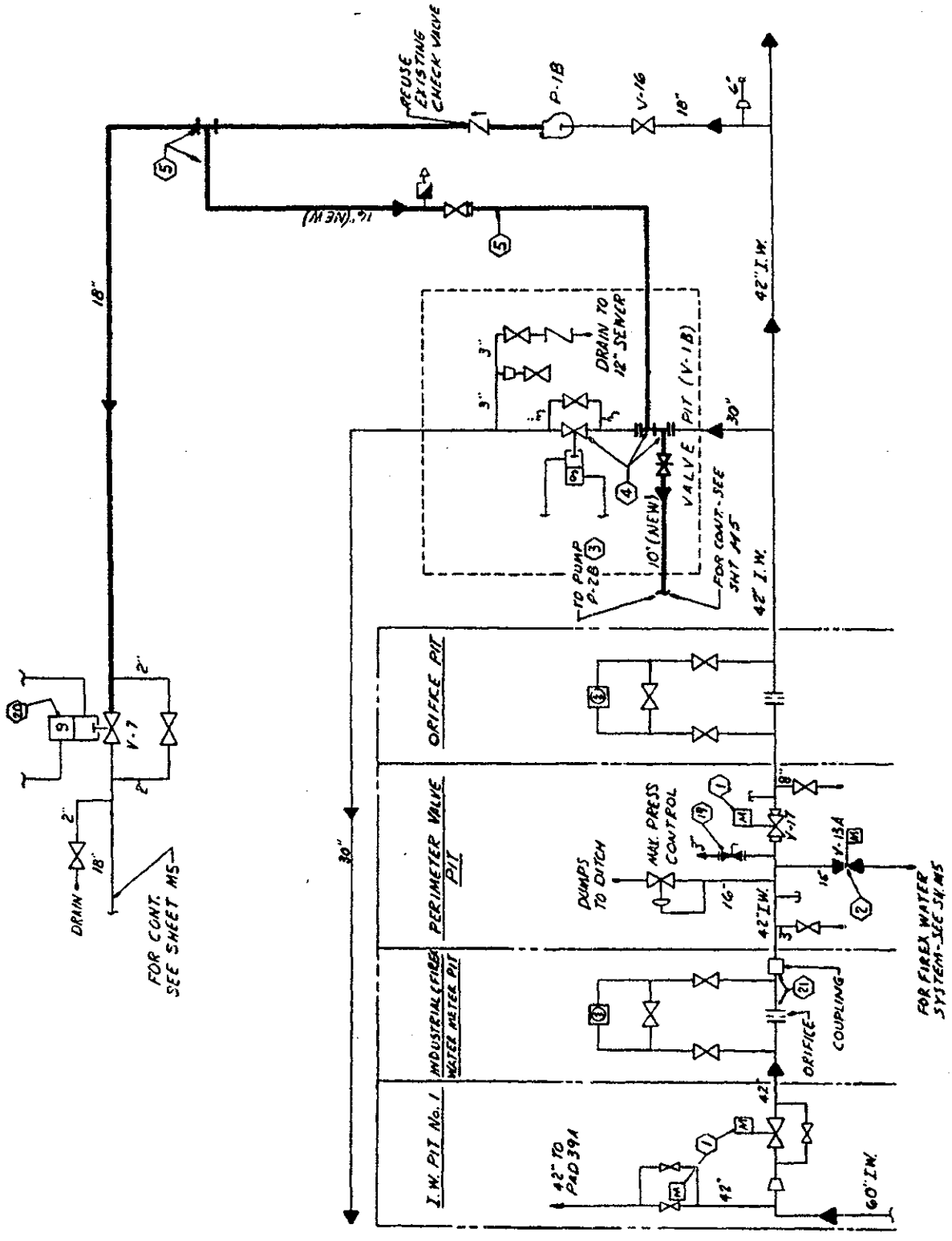

Figure 8-3. New/Existing Lines

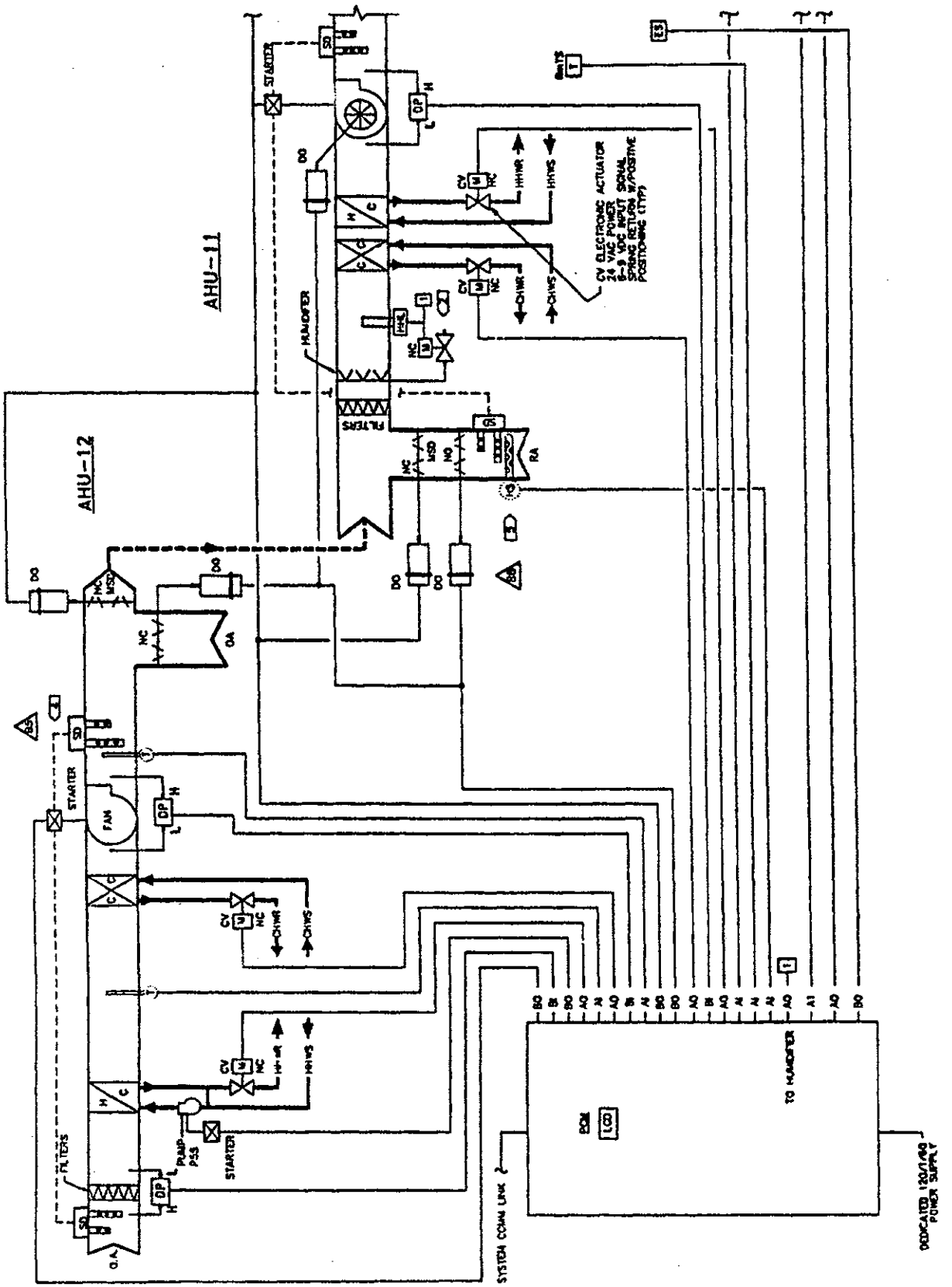

Figure 8-4. Instrument Diagram

a. Instrument piping, tubing, and electrical lines shall be shown in single-line diagrammatic form and identified with name, size, and code or specification. Instrument equipment, such as recorders, controllers, valves, pumps, venturi, rotameters, microphones, etc., shall be shown using symbols. The instruments shall be identified by name, ranges, etc. This data may be included in a schedule. Instruments may be identified using letters. (See figure 8-4.)

b. The instrument diagram shall show, in schematic form, all equipment and lines which are controlled, measured, or operated by instruments. (See figure 8-4.) The equipment and lines shall be identified by name or line number with size and specification omitted. The identification shall be obtained from the flow diagram.

c. Panel-mounted instruments shall be shown near the top of the drawing arranged in a horizontal line. Transmitters, motors, and other instruments are shown in a space below the panel-mounted instruments. The lower part of the drawing shall show the vessels, pumps, columns, tanks, and other equipment being served by the instruments.

d. Whenever an instrument diagram is prepared to delineate additions or modifications to existing facilities, all new instrumentation shall be shown by bold lines, while existing equipment, instrumentation, and piping shall be shown by light lines. A legend shall be included on the drawing defining the symbols and line designations used.

8.4 PIPING DRAWING

8.4.1 DEFINITION. A piping drawing delineates the components required to convey liquids, solids, and gases. Included are such items as the supply and distribution of sanitary water, systems for fire protection, dispensing of industrial gases, drainage, chemicals, fuel supply to an engine, etc.

A piping drawing establishes procedures for construction and planning of interrelated elements of the facilities design.

A piping drawing, or a set of piping drawings, delineates, by incorporating dimensions, symbols, codes, conventions, schedules, diagrams, etc., the kind, size, and routing of pipe, hose and tubing, the associated vessels and equipment, and other facets of design. (See figure 8-5.)

8.4.2 REQUIREMENTS. The following requirements shall be followed when preparing a piping drawing:

a. Exposed pipe shall be shown as a single solid line, and hidden or buried pipe shall be shown as a dashed (hidden) line; however, to delineate clearances and special conditions, pipe may be shown using a double line. (See figure 8-5.)

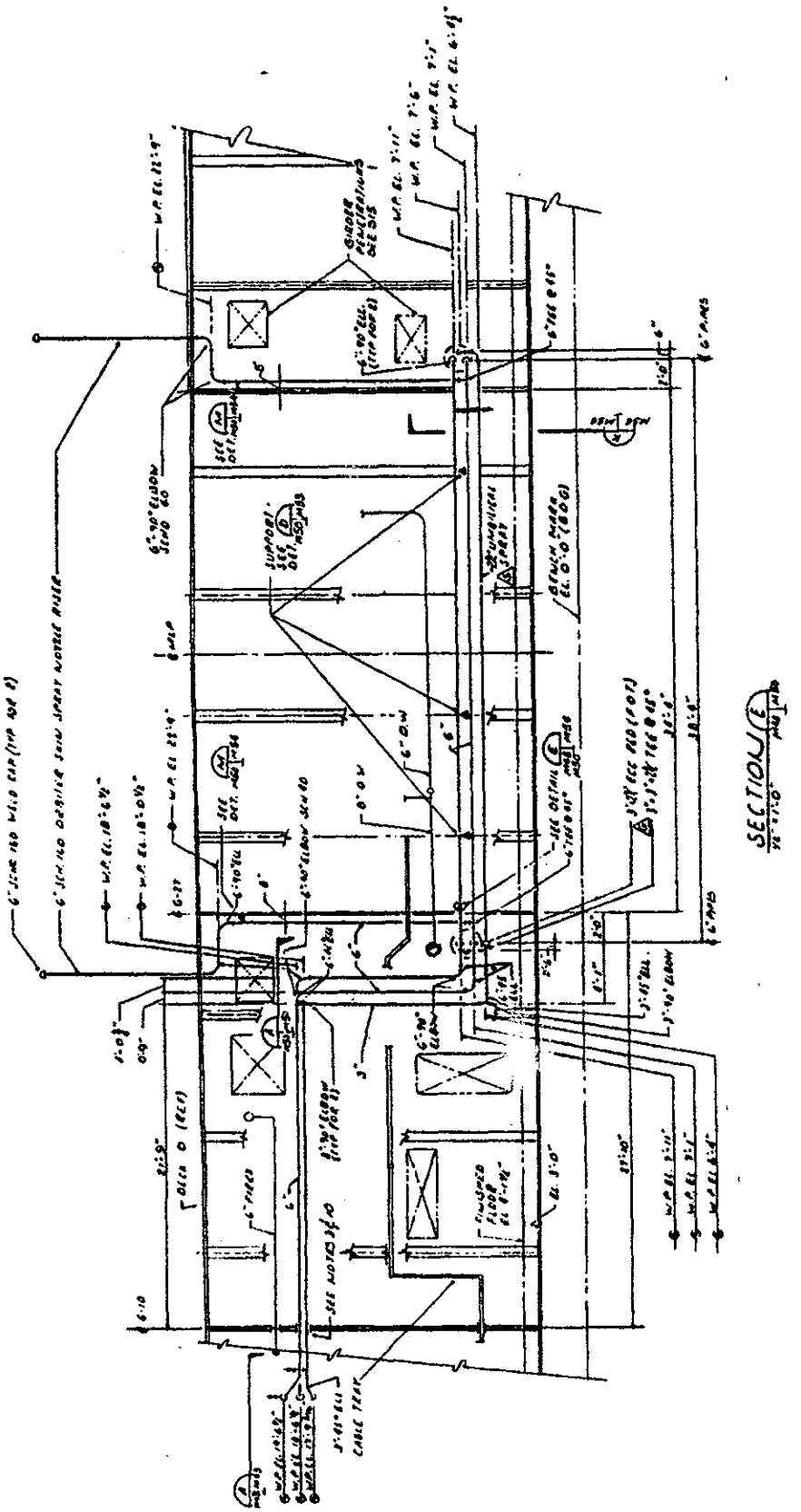

Figure 8-5. Example of Piping Drawing (Sheet 1 of 2)

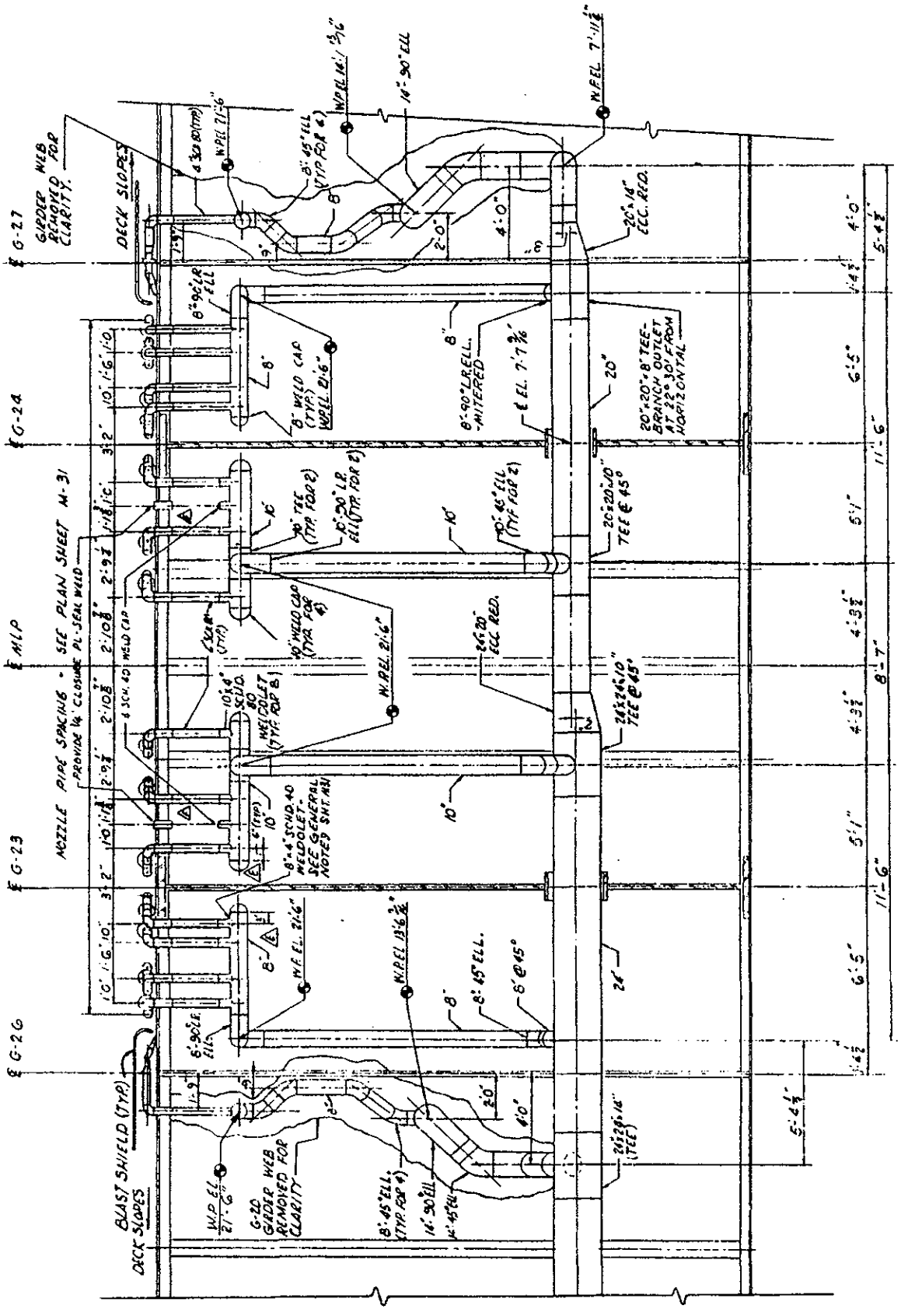

Figure 8-5. Example of Piping Drawing (Sheet 2 of 2)

b. When new and existing pipe and equipment are shown on the same drawing, existing pipe and equipment shall be shown using a light line. (See figure 8-5.)

c. Pipe shall be identified as to size, schedule, material, and fabrication processes. This information, if included in a specification (with the exception of the size), shall not be repeated on the drawing.

d. Valves and fittings shall be delineated symbolically, generally using screwed-fitting symbols. (Refer to KSC-STD-152-1 for symbols.) Valve stems, hand wheels, etc., though shown symbolically, shall be drawn to scale where a clearance problem may exist or where removal or operation may be critical.

e. The scale used for piping drawings, where feasible, should be prepared to the same scale as electrical and architectural drawings to aid in checking of drawings and resolving potential interferences.

f. On piping systems, where the location of the pipe runs is not critical from a design standpoint and there is no possibility of interferences with other components, the dimensional location of the pipe, valves, and fittings need not be shown. The pipe shall be delineated in the desired location and sufficient surrounding area shown for orientation. When dimensions of components other than piping are given, such as door sizes, column spacing, room sizes, beams, etc., they shall be marked "reference."

g. When pipe locations are given, they shall be dimensioned according to the following (specify if dimensions are from finished or unfinished surfaces):

(1) Pipe mains and branches shall be dimensionally located from the facilities structure such as column lines, walls, ceiling, equipment, supports, etc., or from recognized bench marks as shown in figure 8-6 and 8-7.

(2) Pipes supported from a wall shall be dimensioned from the face of the wall to the centerline of the pipe, as shown in figure 8-6.

(3) Pipes supported from an overhead structure, such as a ceiling, shall be dimensioned from their centerlines, as shown in figure 8-7.

(4) Pipes shown in elevation or section shall have their centerline elevations given above or below grade to a reference datum plane, as shown in figure 8-8.

(5) When required, valves shall be dimensioned to the valve centerline.

h. When draining of horizontal lines is required or drip stations are called for, the slope in lines shall be designated by an arrow (SLOPE) placed adjacent to the

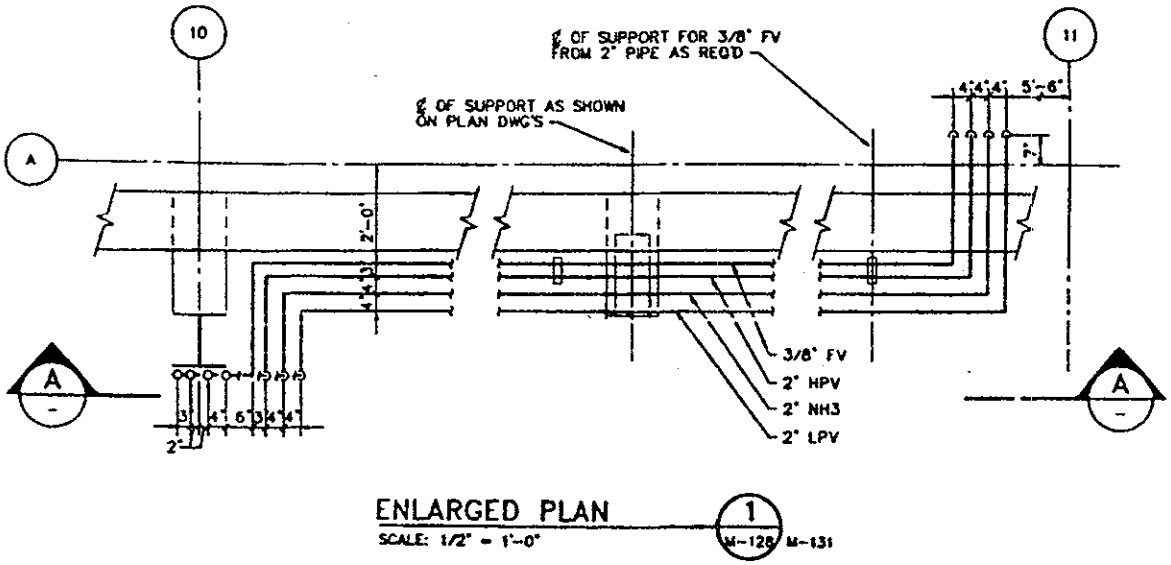

Figure 8-6. Dimensioning of Wall-Supported Pipes

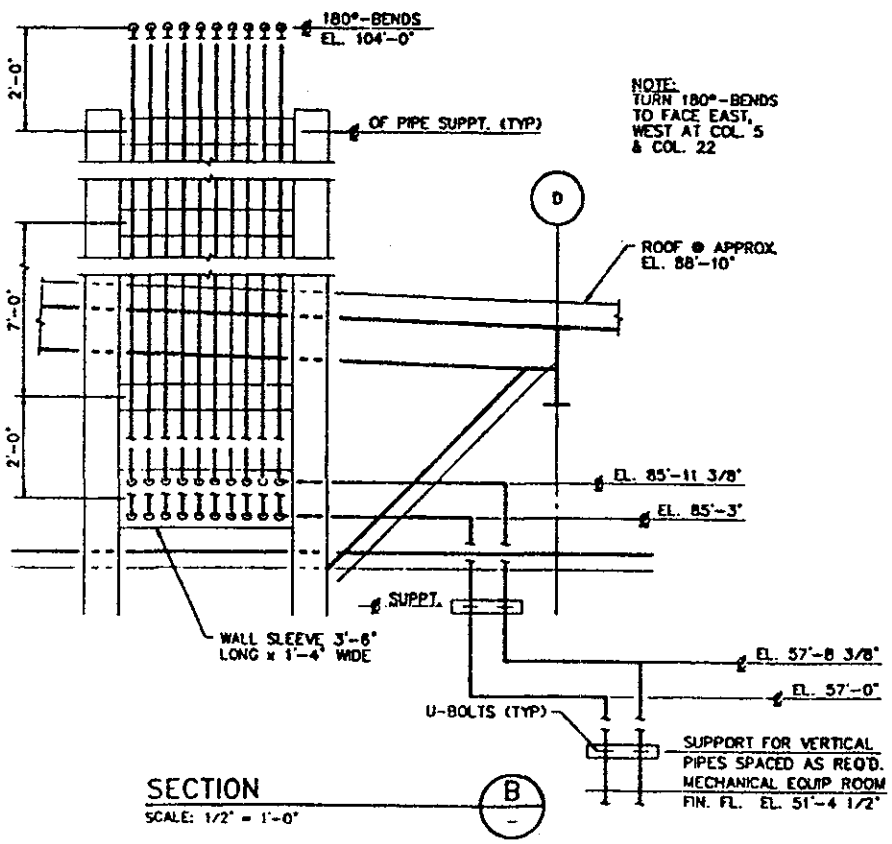

Figure 8-7. Dimensioning of Overhead-Supported Pipes

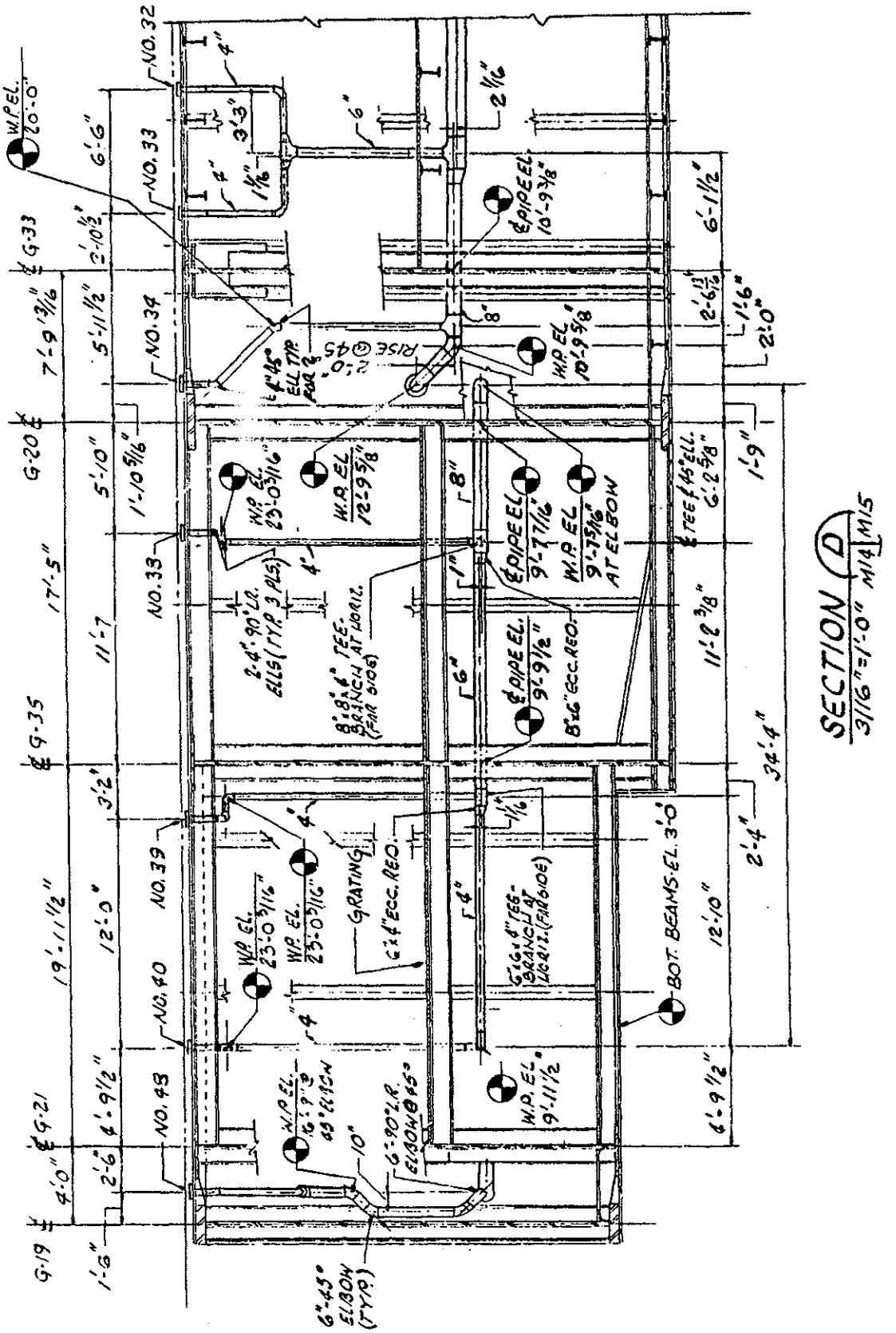

Figure 8-8. Method of Showing Pipe Elevations

applicable line. The slope shall be indicated in millimeters per meter (inches per foot) (SLOPE 1"/FT) or the elevation given at both ends of the slope.

i. When more than one system or service is delineated on the drawing, line designations shall be used. See the example shown in figure 8-9.

j. When pipe or tubing runs are grouped close together, the line designations shall be called out as shown in figure 8-10.

k. Isometric views may be utilized for piping arrangements or details as required for clarity. Isometric drawings shall be drawn 30° to horizontal. (See figure 8-11.)

l. Supports, guides, hangers, and brackets shall be located and described. When detailed, these shall be given a detail number (e.g., S-3), and this same number shall be used as a reference on the arrangement drawing as shown in figure 8-12.

8.5 HEATING, VENTILATING, AND AIR-CONDITIONING DRAWING

8.5.1 DEFINITION. A heating, ventilating, and air-conditioning drawing delineates the components required to supply or remove air by natural or mechanical means. Such air may or may not be conditioned. These drawings establish procedures for construction and planning of interrelated elements of the facility design including pertinent services, equipment, and utilities. The delineation for these drawings shall incorporate dimensions, symbols, codes, conventions, schedules, diagrams, etc., in describing the ducts for the conveyance of air, blowers, filters, heating or cooling coils, roof exhaust fans, grilles, dampers, air-conditioning units, pumps, and controls. (See figure 8-13.)

8.5.2 REQUIREMENTS. The following requirements shall apply when preparing a heating, ventilating, and air-conditioning drawing:

a. The drawing shall be prepared showing routing and location of ducts, grilles, and required ventilating, exhaust, and air-conditioning equipment. The preferred scale of arrangement is 1 mm = 10 mm (1/4" = 1' - 0"). (To aid in checking of drawings and resolving potential interferences among other components such as piping, electrical, architectural, etc., the heating, ventilating, and air-conditioning drawing, where feasible, shall be prepared to the same scale as these other drawings.)

b. Duct layouts shall include grille sizes, flow rate capacity in cubic meters per second (cubic feet per minute), splitters, outlet control dampers, elbows, access doors, branches, volume control dampers, louver openings, heating equipment, and miscellaneous operating control instrument locations. See figure 8-14 for methods of indicating these items.

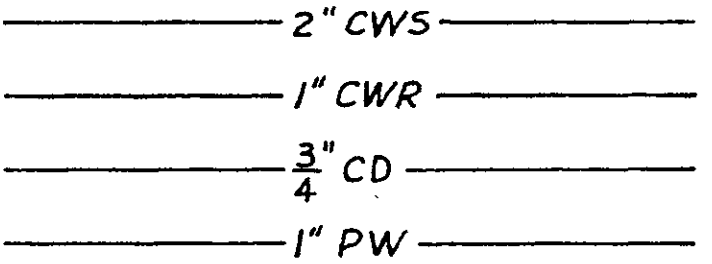

Figure 8-9. Normal Use of Line Nomenclature

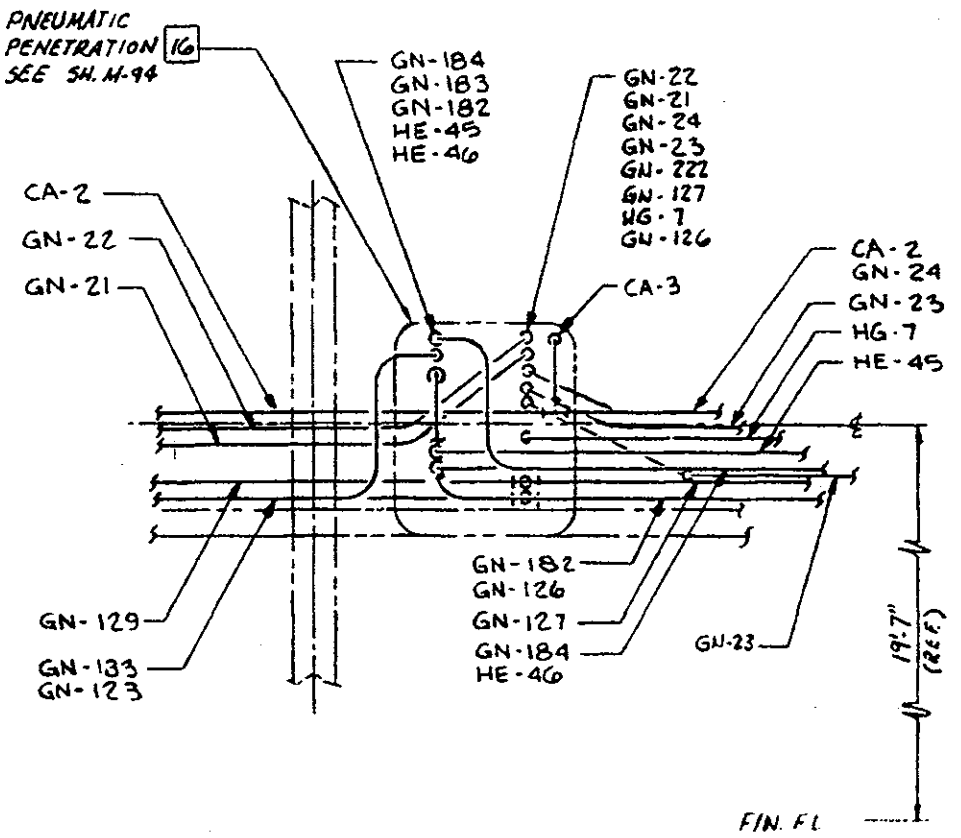

Figure 8-10. Grouping of Line Designations

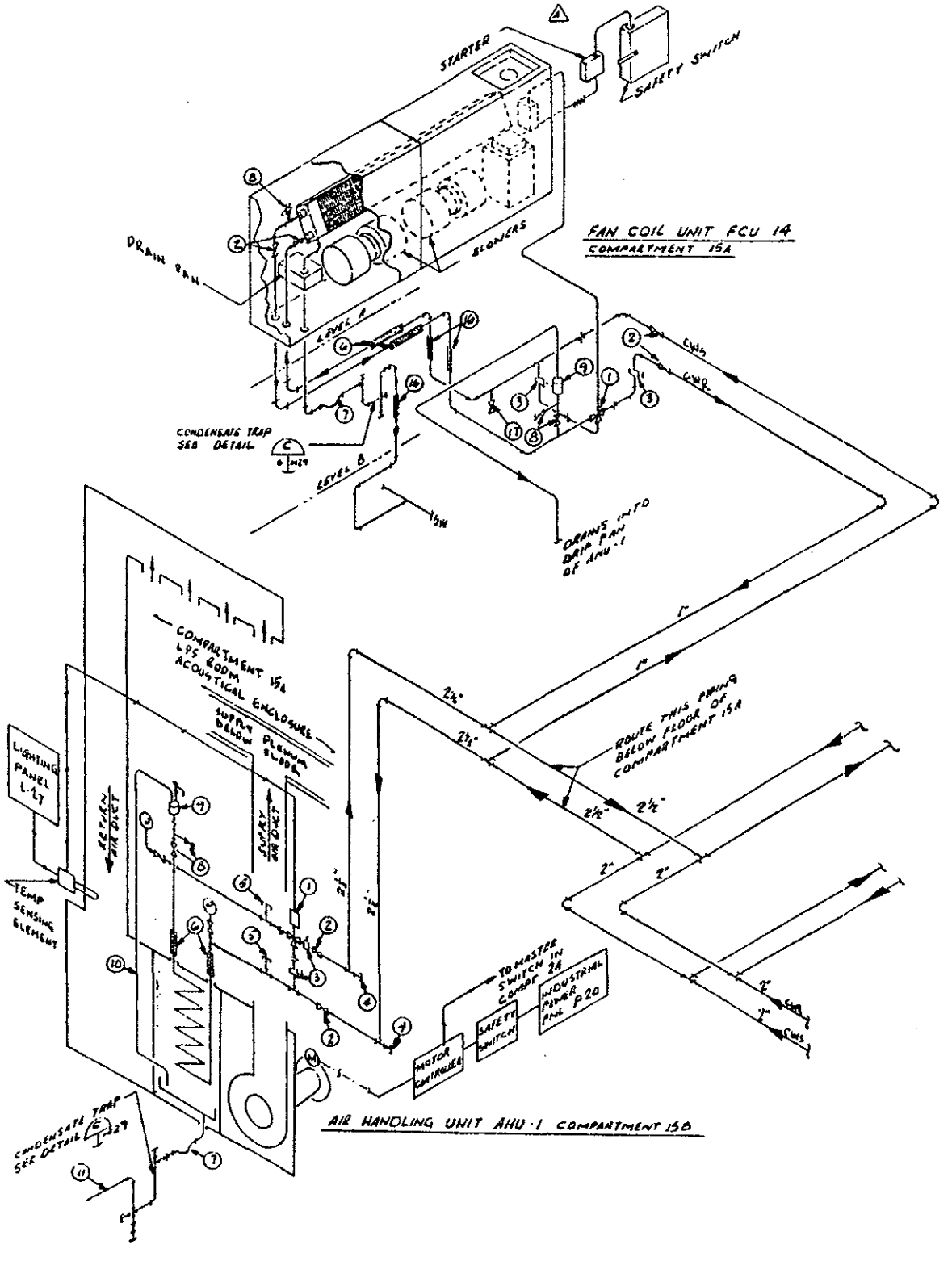

Figure 8-11. Isometric View of Piping

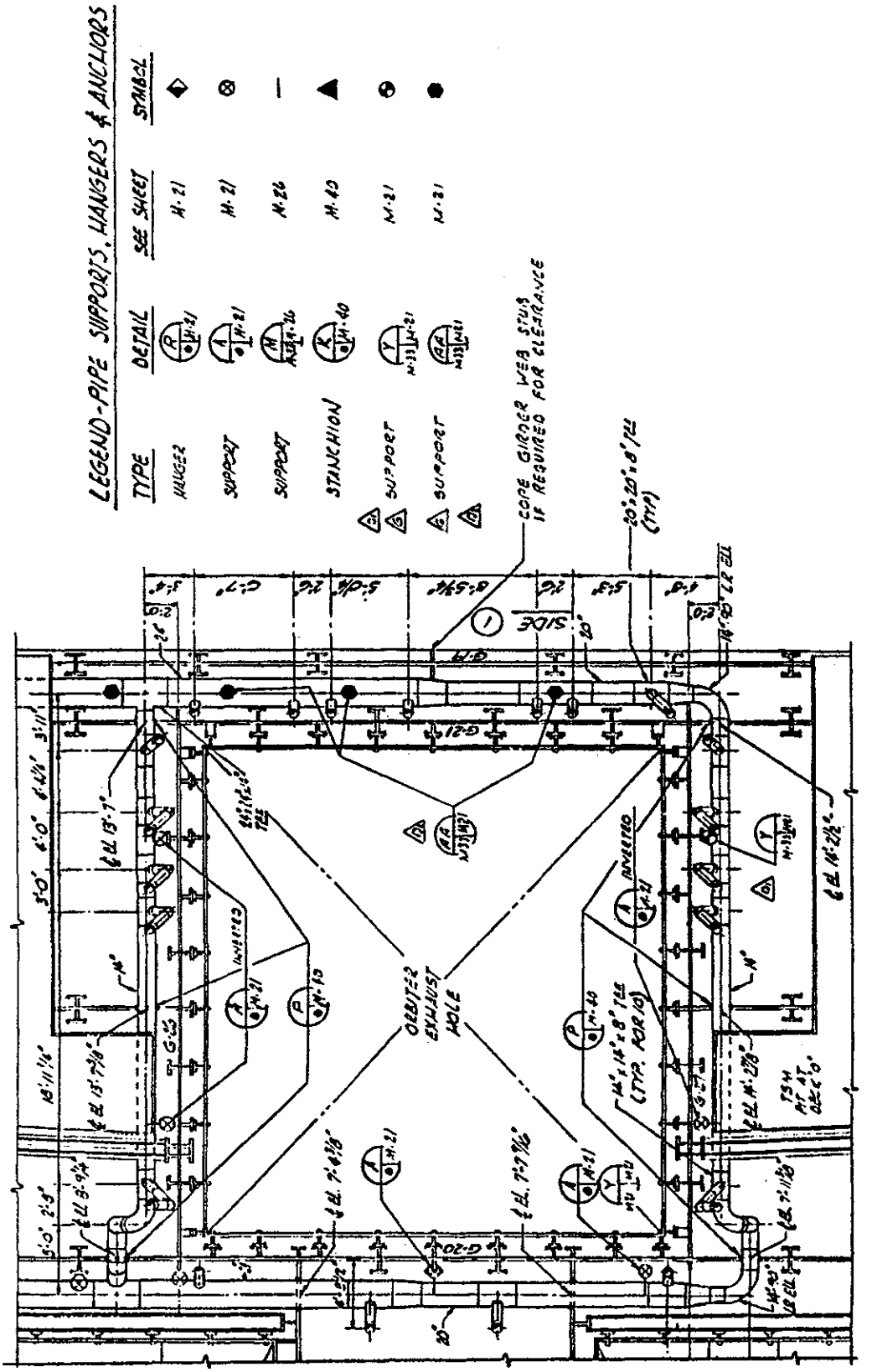

Figure 8-12. Use of Detail Numbers for Support Hardware

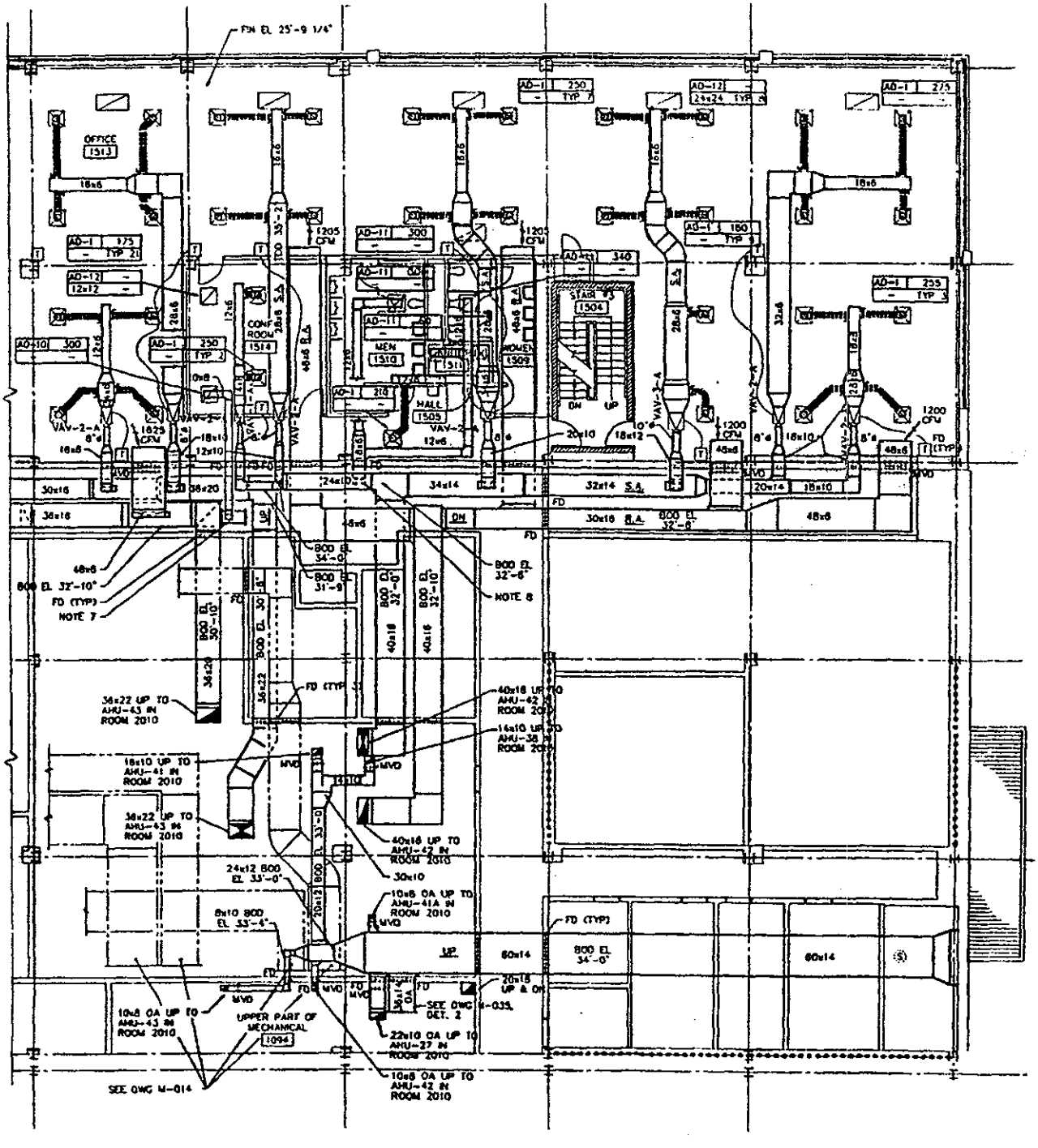

Figure 8-13. Example of a Heating, Ventilating, and Air-Conditioning Drawing

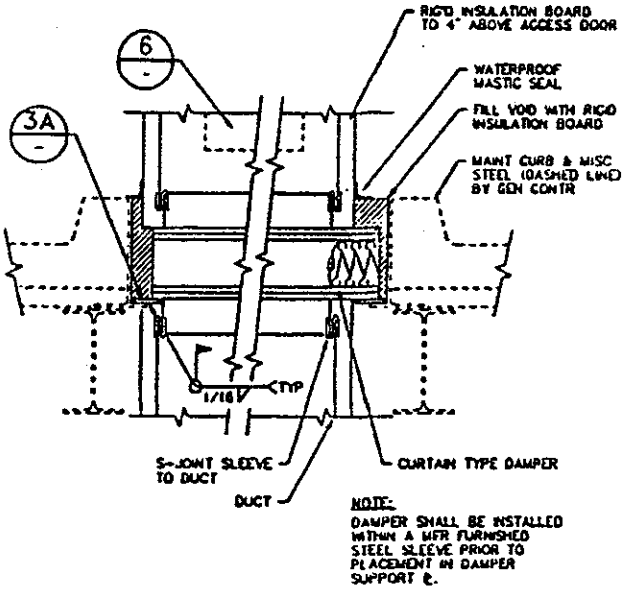

FIRE DAMPER @ FLOOR PENETRATION (2)
NOT TO SCALE

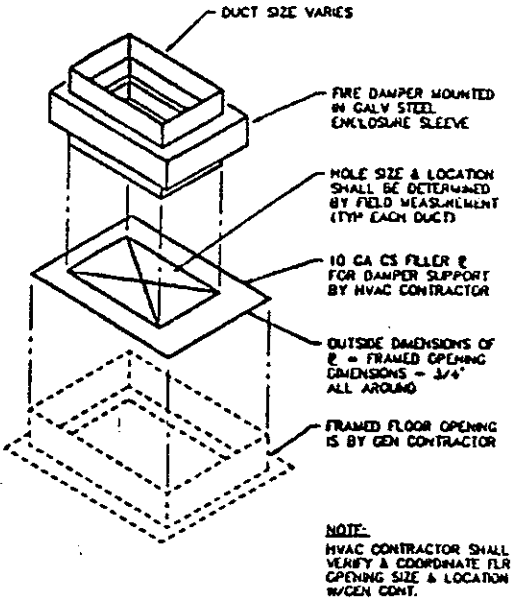

FIRE DAMPER MOUNTING PLATE (3A)
NOT TO SCALE

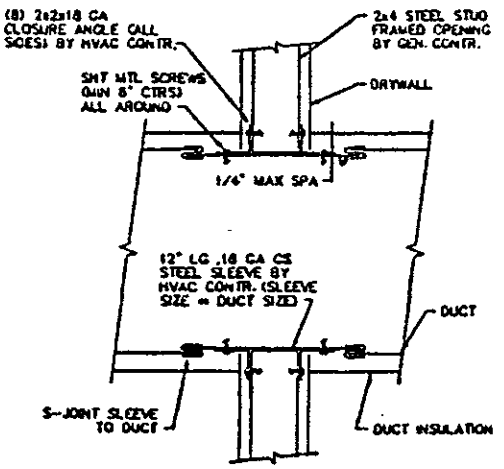

DUCT PENETRATION @ WALL (5)
NOT TO SCALE

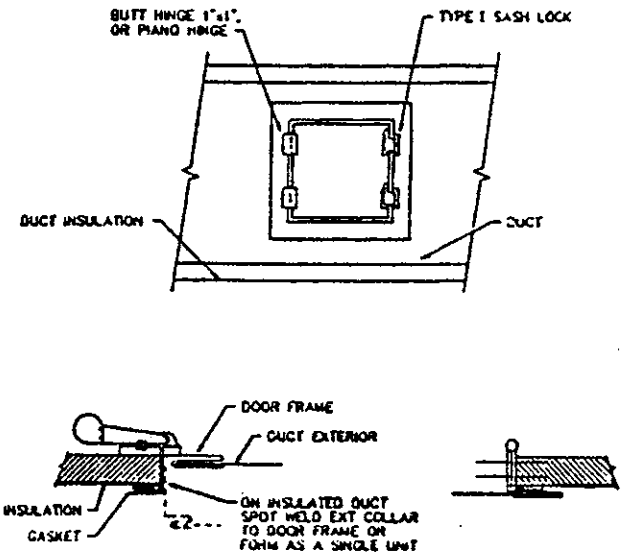

DUCT ACCESS DOOR (6)
NOT TO SCALE

Figure 8-14. Ductwork Details

c. Material for ducts, gage of metal, type and spacing of joints and reinforcements, type and spacing of hangers, angle of change in size transitions, and cross bracing shall be given on the drawing if not covered in the specification.

d. When duct sizes are shown on the plan, the first dimension is the side shown [for example, 2300 mm x 500 mm (90" x 18")]. The 2300-mm (90") dimension is the width and the 500-mm (18") dimension is the depth. (See figure 8-15.)

e. Direction of flow shall be indicated by an arrow as shown in figure 8-15.

f. All parts such as coils, fans, dampers, housing, compressors, and miscellaneous items shall be designated on the drawing. A schedule may be employed for this purpose. A schedule lists the type, size, capacity, speed, and other pertinent components in tabular form. (See figure 8-16.)

g. Isometric views may be used to clarify other drawings.

h. Automatic control diagrams for ventilating, heating, and air-conditioning systems shall show:

(1) All controllers, thermocouples, valve and damper operators, relays, and accessories necessary to illustrate the functions and sequence of operation of all principal components in the system

(2) The set point and throttling range of all controllers

(3) The normally open or closed position of all valves and dampers

(4) The sequence of operation of the system through a complete winter-summer cycle

8.6 FACILITIES EQUIPMENT DRAWINGS

Facilities equipment drawings delineate installation and construction details for special equipment such as tanks, towers, condensers, special doors, hoists, etc. The three general types of drawings included in this category are:

a. Facilities mechanical equipment construction drawing

b. Facilities mechanical equipment modification drawing

c. Facilities equipment installation drawing

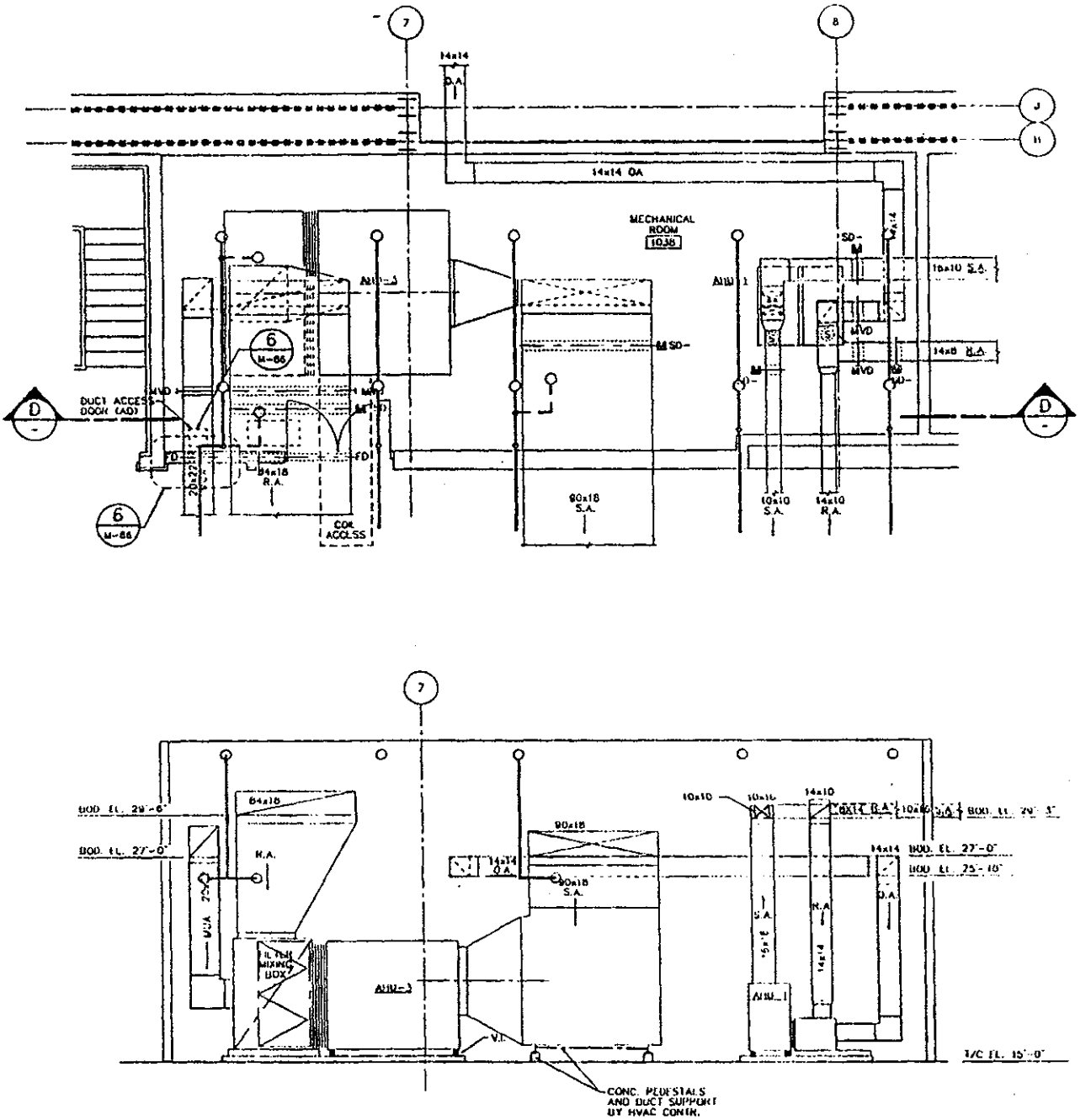

Figure 8-15. Example of Duct Size Dimensioning and Flow-Direction Arrows

EXHAUST FAN SCHEDULE

MARK	EF-1	EF-2	EF-3	EF-4	EF-5	EF-6	EF-7	EF-8	EF-9A & 9	EF-10	EF-11
SERVES	AHU-13	AHU-15	AHU-7	AHU-17	AHU-19	AHU-21	AHU-9	AHU-23	MECH RM	CHEM LAB	CHEM LAB
LOCATION	RM 3004	RM 3004	RM 3005	RM 3005	RM 3005	RM 3007	RM 3007	RM 3007	RM 3005	RM 1067	RM 1068
DESCRIPTION	AXIAL FLOW	AXIAL FLOW	AXIAL FLOW	AXIAL FLOW	AXIAL FLOW	AXIAL FLOW	AXIAL FLOW	AXIAL FLOW	PROP	CNTF	CNTF
CAPACITY (CFM)	9,240/18,480	9,240/18,480	4,030/9,030	9,240/18,480	9,240/18,480	9,240/18,480	9,240/18,480	9,240/18,480	9,000	1,000	1,000
TOTAL STATIC (" WG)	1.0	1.0	1.5	1.0	1.0	1.0	1.5	1.0	0.5	0.5	0.5
FAN SPEED (RPM)	1,587	1,587	1,935	1,587	1,587	1,587	1,651	1,587	533	870	870
MOTOR HORSEPOWER (HP)	15	15	7.5	15	15	15	15	15	1	1/2	1/2
BRAKE HORSEPOWER (HP)	11.5	11.5	5.9	11.5	11.5	11.5	13.5	11.5	0.97		
MOTOR VOLTAGE/PHASE	460/3	460/3	460/3	460/3	460/3	460/3	460/3	460/3	230/3	120/1	120/1
MOTOR CLASS	2	2	2	2	2	2	2	2			
MANUFACTURER	TRANE	TRANE	TRANE	TRANE	TRANE	TRANE	TRANE	TRANE	GREENHECK	KEWAUNEE	KEWAUNEE
MODEL	Q 33	Q 33	Q 21	Q 33	Q 33	Q 33	Q 33	Q 33	SPN-36	2C3303-C	2C3303-C
ACCESSORIES	1 THRU 3	1 THRU 3	1 THRU 3	1 THRU 3	1 THRU 3	1 THRU 3	1 THRU 3	1 THRU 3	2-3-4-10	2-3	2-3

AIR CONDITIONING SCHEDULE

UNIT	LOCATION:		LIEBERT UNIT DATA:		ELECTRICAL DATA:				COOLING COIL DATA:													
NUMBER	ROOM	LOCATION /SHEET	UNIT	ACCESSORIES	HP	VOLT /PHASE	HUMID. KW	SUPPLY CFM	TYPE	ROWS	FPF	FACE AREA	COIL CONNECTION	FACE VEL.	MIN BTUH CAPACITY	WATER SIDE: EWT	LWT	GPM	WPD	AIR SIDE: EAT db	EAT wb	LAT db
AC 1	1062	M-015	FH302C	1-2	5.0	460/3	6.4	8900	508	4	168	18.47	1.625	482	173200	42	55.3	28	8.5	75	62.5	57
AC 2	1062	M-015	FH302C	1-2	5.0	460/3	6.4	8900	508	4	168	18.47	1.625	482	173200	42	55.3	28	8.5	75	62.5	57
AC 3	2023A	M-022	FH200C	1-2	3.0	460/3	4.8	5825	508	4	168	11.87	1.375	499	114000	42	53	20.8	9	75	62.5	56.9
AC 4	2023	M-022	FH302C	1-2	5.0	460/3	6.4	8900	508	4	168	18.47	1.625	482	181000	42	54.9	28	8.9	75	62.5	56.2
AC 5	2023	M-022	FH302C	1-2	5.0	460/3	6.4	8900	508	4	168	18.47	1.625	482	181000	42	54.9	28	8.9	75	62.5	56.2
AC 6	2045	M-025	FH200C	1-2	3.0	460/3	4.8	5825	508	4	168	11.87	1.375	499	132600	42	52.5	25.3	9	75	62.5	53.9
AC 7	2021	M-025	FH529C	1-2	7.5	460/3	9.6	12000	508	8	168	25	2.125	480	261300	42	53.6	45	9.7	75	62.5	54.8
AC 8	2021	M-025	FH529C	1-2	7.5	460/3	9.6	12000	508	8	168	25	2.125	480	261300	42	53.6	45	9.7	75	62.5	54.8
AC 9	2021	M-025	FH529C	1-2	7.5	460/3	9.6	12000	508	8	168	25	2.125	480	261300	42	53.6	45	9.7	75	62.5	54.8
AC 10	2021	M-025	FH147C	1-2	2.0	460/3	4.8	5025	508	3	168	11.87	1.125	431	117100	42	57.6	15	10.4	75	62.5	53.4
AC 11	2022	M-025	CF 51C	1-2	1.5	460/3	4.8	2800	508	4	168	8.94	1.125	403	62700	42	50.3	15.1	7.5	75	62.5	54.3
AC 12	2026	M-025	FH302C	1-2	5.0	460/3	6.4	8900	508	4	168	18.47	1.625	482	186900	42	57	25	8.3	75	62.5	55.6
AC 13	2027	M-022	FH302C	1-2	5.0	460/3	6.4	8900	508	4	168	18.47	1.625	482	186900	42	57	25	8.3	75	62.5	55.6
AC 14	2028	M-022	FH302C	1-2	5.0	460/3	6.4	8900	508	4	168	18.47	1.625	482	186900	42	57	25	8.3	75	62.5	55.6
AC 15	2029	M-022	FH302C	1-2	5.0	460/3	6.4	8900	508	4	168	18.47	1.625	482	186900	42	57	25	8.3	75	62.5	55.6
AC 16	2030	M-022	FH302C	1-2	5.0	460/3	6.4	8900	508	4	168	18.47	1.625	482	186900	42	57	25	8.3	75	62.5	55.6
AC 17	2031	M-022	FH302C	1-2	5.0	460/3	6.4	8900	508	4	168	18.47	1.625	482	186900	42	57	25	8.3	75	62.5	55.6
AC 18	2032	M-022	FH302C	1-2	5.0	460/3	6.4	8900	508	4	168	18.47	1.625	482	186900	42	57	25	8.3	75	62.5	55.6
AC 19	2033	M-023	FH302C	1-2	5.0	460/3	6.4	8900	508	4	168	18.47	1.625	482	186900	42	57	25	8.3	75	62.5	55.6
AC 20	2034	M-023	FH302C	1-2	5.0	460/3	6.4	8900	508	4	168	18.47	1.625	482	186900	42	57	25	8.3	75	62.5	55.6
AC 21	1018	M-015	CF51C	2	1.0	460/3	4.0	2800	508	4	168	8.94	1.125	403	23000	42	46	13.5	8.1	75	62.5	54.3

Figure 8-16. Typical Schedules

8.6.1 FACILITIES MECHANICAL EQUIPMENT CONSTRUCTION DRAWING.

8.6.1.1 Definition. A facilities mechanical equipment construction drawing shows the parts and the assembled relationship of the parts in sufficient detail to construct the mechanical equipment. (See figure 8-17.)

8.6.1.2 Requirements. A facilities mechanical equipment construction drawing shall contain sufficient external and sectional views to show the relationship between each subassembly and part comprising the assembly of the equipment. Detail information shall be given for each part. (See figure 8-17.) Materials and parts shall be called out in the field of the drawing. An identifying part number cross-referenced to the identifying number in a parts list may be appropriate in some cases. Pertinent installation drawings may be referenced.

8.6.2 FACILITIES MECHANICAL EQUIPMENT MODIFICATION DRAWING.

8.6.2.1 Definition. A facilities mechanical equipment modification drawing delineates the changes required to be made to mechanical equipment such as a vessel, blower, crane, condenser, etc., to adapt it to a specific installation. (See figure 8-18.)

8.6.2.2 Requirements. An equipment modification drawing shall delineate the changes required with sufficient detail to clearly orient and define the work to be performed. When the modifications are minor, they may be shown on the equipment installation drawing.

8.6.3 FACILITIES EQUIPMENT INSTALLATION DRAWING.

8.6.3.1 Definition. A facilities equipment installation drawing shows general configuration, attaching hardware, piping, and information to locate, position, and mount equipment relative to fixed points. (See figure 8-19.)

8.6.3.2 Requirements. The following requirements shall apply when preparing a facilities equipment installation drawing:

a. An equipment installation drawing shall show the equipment in simplified outline form drawn to scale. The equipment shall be located from column lines, walls, ceilings, or other fixed points. Clear space required for maintenance and operation, such as space for retubing, changing filters, future additions, etc., shall be indicated by phantom lines. Special openings, etc., required for removal or bringing the equipment into the space shall be shown.

b. Sufficient piping, electrical, and other connecting or pertinent components shall be shown and reference made to the applicable drawing.

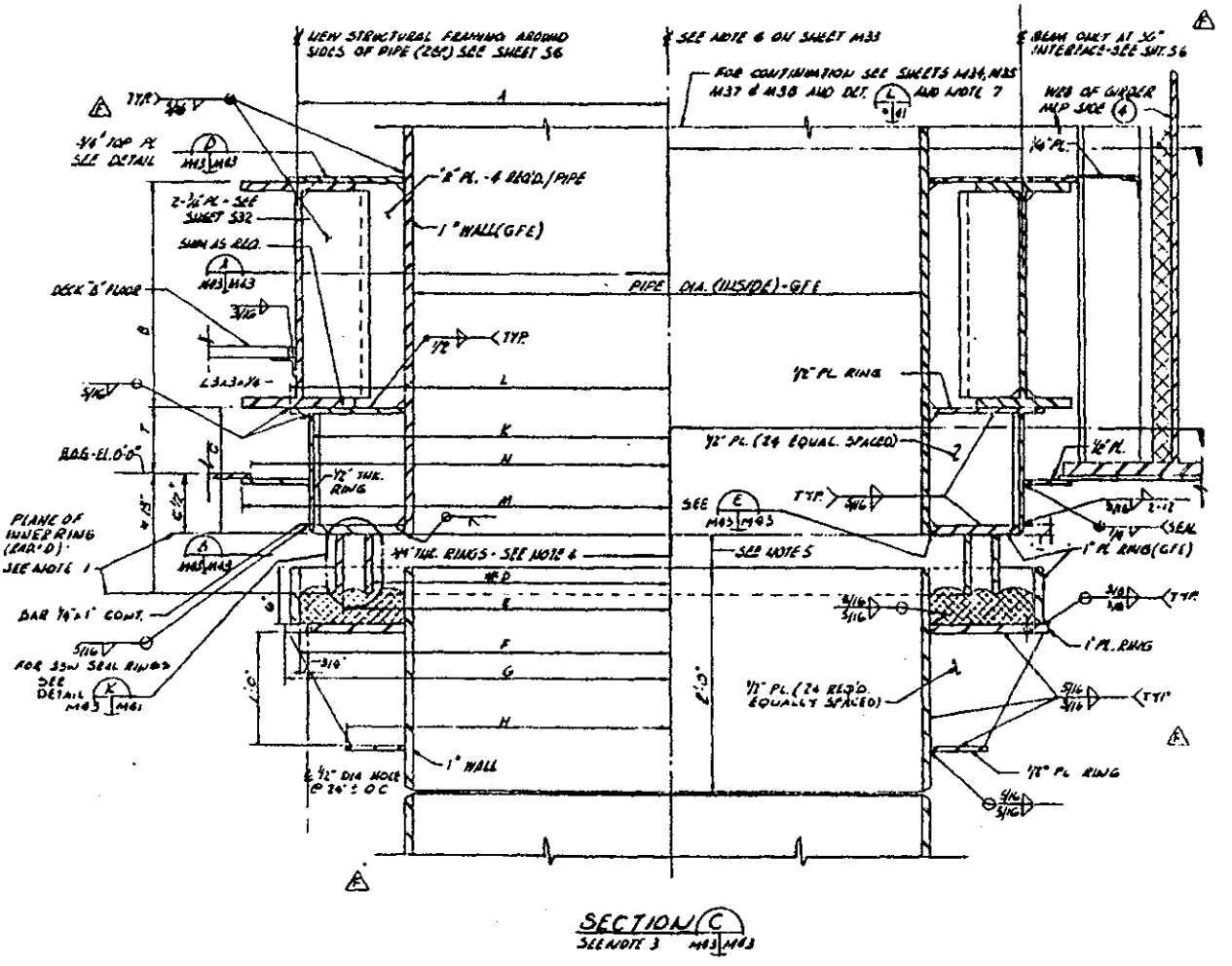

					GFE - CONTRACTOR INFO ONLY									
PIPE DIA	A	B	C	RD	E	F	G	H	K	L	M	N	R	T
56" I.D.	39"	26 3/16"	13 1/2"	31 1/2"	34 1/8"	39"	40 1/2"	34"	37 1/2"	40"	43"	42"	4" x 1/4" - 28 7/16"	7"
39" I.D.	30"	18 3/16"	10 1/2"	21 1/2"	24 1/8"	29"	30 1/2"	24"	28"	31"	36"	35"	4 5/16" x 3/4" x 18"	4"

NOTES:

1. PLANE OF THIS RING SHALL BE TRUE & LEVEL IN ALL DIRECTIONS TO WITHIN 0.063" AFTER INSTALLATION. SEE SPECIFICATIONS FOR OTHER TOLERANCES. * = CONTROL DIMENSIONS.
2. SEE SHEETS S6 & S32 FOR STRUCTURAL FRAMING AROUND PIPE & NEW TEES AT GIRDER UNI MLP SIDE (4)
3. LAYOUT IS APPROXIMATE FOR 54" I.D. INTERFACE: DO NOT SCALE.
4. FOR CONTINUOUS SEAL ASSEMBLY SEE DETAIL F M43 M44 CONTRACTOR SHALL INSTALL SEAL & RING SEGMENTS.
5. GAP BETWEEN PIPE ENDS SHALL BE 3" WHEN SEAL IS COMPRESSED. SUBMIT SHOP DRAWINGS. SEE NOTE 4.

Figure 8-17. Mechanical Equipment Construction Drawing

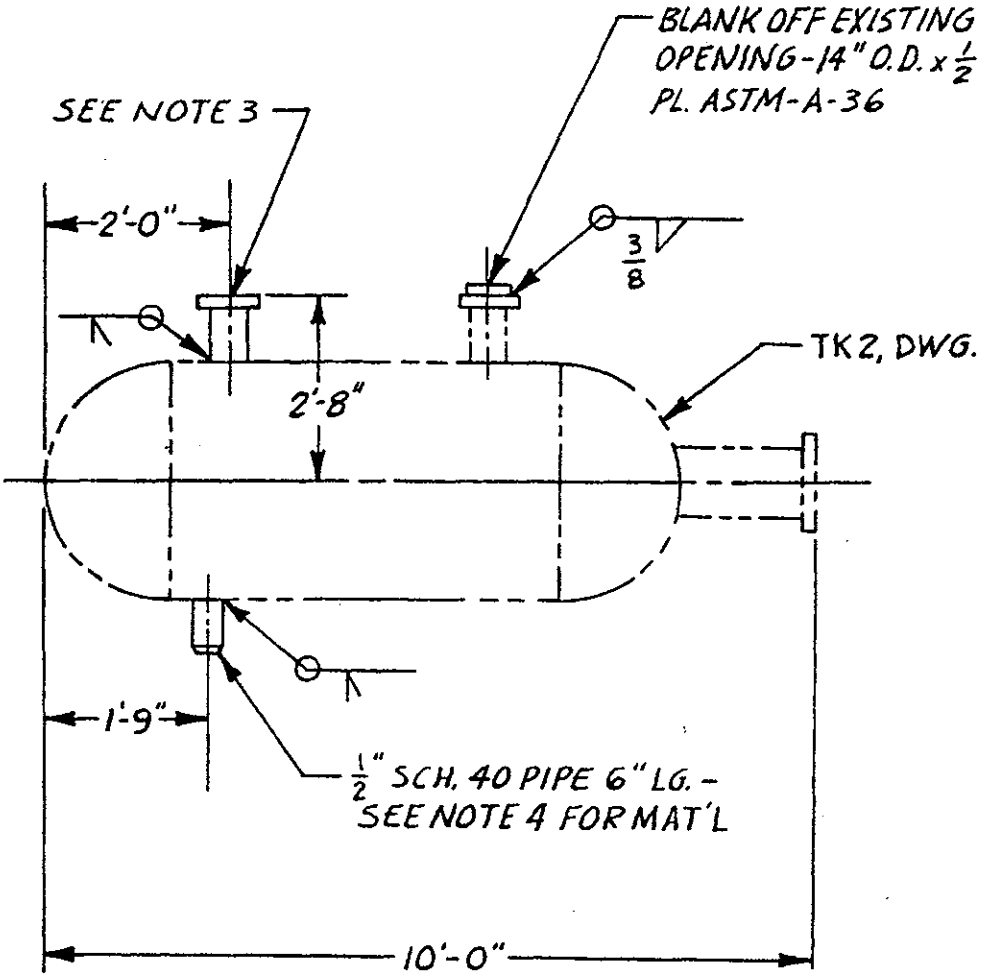

Figure 8-18. Facilities Equipment Modification Drawing

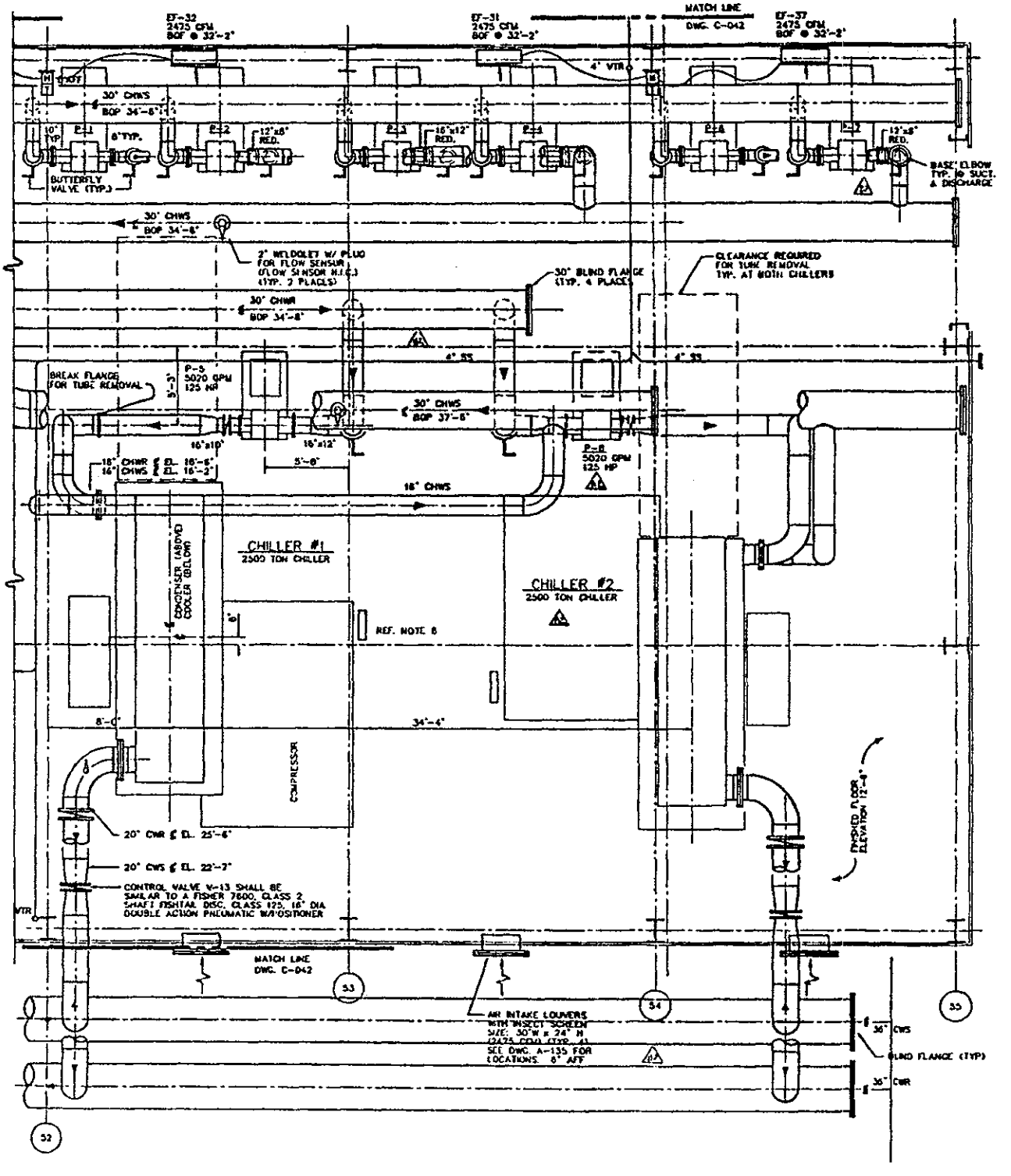

Figure 8-19. Facilities Equipment Installation

c. The equipment shall be identified as to type, capacity, power rating (watts, horsepower), coil data, etc. This may be shown in a schedule or in a note adjacent to the equipment. For typical schedules, see figure 8-20.

d. A separate equipment installation drawing shall not be prepared if it is feasible to include the information on the drawing with the interconnected pipes, ducts, and conveyors.

8.7 SYMBOLS FOR MECHANICAL DRAWINGS

Symbols used for pipe fittings, valves, and piping shall be in accordance with KSC-STD-152-1. Symbols for pipe fittings, valves, and piping not included in KSC-STD-152-1 may be found in ANSI Z32.2.3. Symbols used for heating, ventilating, and air-conditioning lines and components shall be in accordance with ASHRAE Handbook, Fundamentals. These symbols may be used for all systems using any kind of medium: gas, steam, or fluid. Since symbolic representation does not usually involve exact or scale layout or the actual run or leads of piping, the same symbol may be used for all projections of the system, except where specific symbols for the various views are included in the requirements.

AIR HANDLING UNIT SCHEDULE

UNIT NUMBER	LOCATION: ROOM	DETAIL /SHEET	TRANE FAN DATA: UNIT	ARRG	ACCESSORIES	RPM	SUPPLY CFM	OUTSIDE CFM	TOTAL STATIC	EXTERNAL STATIC *	DUCT PRESSURE CLASS SUPPLY	RETURN	ELECTRICAL DATA: BHP	HP	VOLT /PHASE
AHU 1	1038	1/M-035	6-C	VERT-6	3-9-11	2,066	1860	1180	3.96	3.28	HIGH	LOW	2.3	2.5	460/3
AHU 2	1094	2/M-035	14-F	VERT-6	1-3-7-9-11	1,491	6350	1630	5.56	4.68	HIGH	LOW	9.4	10	460/3
AHU 3	1038	1/M-035	41-G	HORZ-1	3-7-8-9-10-11	1,205	21890	4430	4.38	3.54	HIGH	LOW	19.7	20	460/3
AHU 4	1094	2/M-035	21-C	VERT-8	3-7-8-9-11	1,471	11150	2230	4.19	3.28	HIGH	LOW	14.3	15	460/3
AHU 5	1094	2/M-035	6-C	VERT-6	1-3-9	1,921	2570	1160	3.54	2.71	HIGH	LOW	3.0	2.9	460/3
AHU 6	3002	1/M-038	21-B	VERT-8	1-3-7-9	971	10870	600	4.34	3.40	HIGH	LOW	12.3	15	460/3
AHU 7	3005	1/M-039	41-G	VERT-8	1-3-6-7-9-10	14,161	20140	4030	3.89	2.97	HIGH	LOW	17.5	20	460/3
	EMERG	-	-	-	-	-	9030	-	-				-	-	-
AHU 8	3005	1/M-039	10-E	VERT-6	5-8-9-12	1,422	4030	4030	3.49	1.22		LOW	3.8	5	460/3
AHU 9	3007	1/M-040	86-G	HORZ 1	1-3-6-7-9-10	1,091	43000	9115	3.81	2.96	HIGH	LOW	41.1	50	460/3
	EMERG	-	-	-	-	-	18900	-	-		HIGH	LOW	-	-	-

COOLING COIL DATA: TYPE	ROWS	FIN	FPF	TURB	WD	LEN	COIL CONNECTION: INLET	OUTLET	FACE VEL.	MIN BTUH CAPACITY: SENS	TOTAL	WATER SIDE: EWT	LWT	GPM	WPD	AIR SIDE: EAT db	EAT wb	LAT db	LAT wb	APD
WL	4	DF	81	Y	18.75	45	2.5	2.5	317	23070	102751	42	57	13.7	2.7	84.3	77.3	63.5	62.9	0.21
WL	4	DF	115	Y	33.75	60	2.5	2.5	452	140300	204900	42	57	27.3	3.8	78.1	67.1	57.5	57.1	0.38
WL	6	DF	136	N	56.25	132	2.5	2.5	425	253400	253400	42	47.5	91.6	13	65	53.8	46	45.3	0.44
WL	6	DF	147	N	31.25	114	2.5	2.5	451	132600	132600	42	47.8	46	9.7	64.9	53.9	46	45.5	0.51
WL	4	DF	101	Y	18.75	45	2.5	2.5	439	45000	57700	42	48.5	7	0.7	76.7	65.6	59.9	58.5	0.33
WL	4	DF	88	N	31.25	99	2.5	2.5	506	157254	231923	42	57	30.9	3.1	76.7	65.6	60.8	58.9	0.41
WL	6	DF	76	N	56.25	108	2.5	2.5	477	231300	231300	42	57	30.8	1.6	65.2	54	54.7	49.5	0.4
-	-	-	-	-	-	-			214	235000	496600	42	52.8	91.7	12.3	73.6	68.2	50.1	50	0.15
WD	8	SF	132	Y	30	60	2.5	2.5	322	225100	479600	42	52	95.7	6	96	81	46	45.9	0.78
WL	4	DF	118	N	93.75	138	(3) 2.5	(3) 2.5	479	493800	493800	42	57	65.8	2.1	65.2	54	54.7	49.5	0.33
-	-	-	-	-	-	-			210	466700	982700	42	53.6	169.5	11.7	73.3	68	51	50.9	0.11

HEATING COIL DATA: TYPE	ROWS	FIN	FPF	TURB	WD	LEN	COIL CONNECTION: INLET	OUTLET	FACE VEL.	CAPACITY MIN MBTU	WATER SIDE: EWT	LWT	GPM	WPD	AIR SIDE: EAT	LAT	APD
WC	1	SF	130	N	18	45	1	1	331	81845	150	119.8	4.1	0.22	42.9	73.7	0.07
WC	1	SF	80	N	33	60	2.5	1.5	462	50100	150	135.5	6.9	0.16	61.4	68.7	0.1
-	-	-	-	-	-	-	-	-	-	221570	-	-	-	-	-	-	-
-	-	-	-	-	-	-	-	-	-	111868	-	-	-	-	-	-	-
WC	1	SF	80	N	18	45	1	1	457	38.670	150	117.8	2.4	0.11	54.2	68.1	0.10
WC	1	SF	80	N	30	99	1	1	527	44208	150	142.4	11.6	0.5	71.3	75.1	0.13
WC	1	SF	80	N	54	108	1.25	1.25	497	159400	150	129.2	15.3	0.32	64.2	71.5	0.12
-	-	-	-	-	-	-			223	391500	150	133.2	46.5	2.09	35	75	0.03
WC	1	SF	80	N	30	45	2.5	1.5	430	87360	150	126.1	7.3	0.18	25	45.1	0.09
WC	1	SF	80	N	90	138	(3) 2.5	(3) 1.5	499	265350	150	133.6	34.8	0.6	63.6	69.7	0.12
-	-	-	-	-	-	-			219	819400	150	130.7	84.9	2.84	35	75	0.03

AHU ACCESSORIES

1. INLET VANES
2. COIL VENT AS REQUIRED BY MANUFACTURER (ALL UNITS)
3. FILTER HOUSING (FILTER/MIXING BOX WITH 2" FILTERS BY AHU MANUFACTURER)
4. ELECTRIC REHEAT COIL
5. FILTER HOUSING WITH FILTERS (BY FILTER MANUFACTURER)
6. HEATING COIL SECTION DOWNSTREAM FROM COOLING COIL
7. HUMIDIFIER SECTION - FIELD BUILT
8. WIDE COIL
9. SMOKE DETECTOR IN SUPPLY, RETURN, AND OUTSIDE AIR DUCT.
10. SMOKE DAMPERS FOR AHU UNIT.
11. NOT USED.
12. COILS TO BE COPPER CONSTRUCTION.
13. AHU-11 TO HAVE AIR FOIL FAN.

NOTE:

* EXTERNAL STATIC EQUALS TOTAL STATIC LESS COIL & INTERNAL FILTER LOSS.

Figure 8-20. Typical Air-Conditioning Schedule

SECTION IX

ELECTRICAL DRAWINGS

9.1 SCOPE

This section defines the electrical drawings normally prepared by or for the John F. Kennedy Space Center (KSC), NASA, and identifies the requirements for preparing these drawings.

9.2 DEFINITION OF ELECTRICAL DRAWINGS

Facilities electrical drawings are graphic representation of facilities electrical design requirements. These drawings are provided when essential in planning, procurement, construction, evaluation, recording, repair, maintenance, and use of the particular facilities.

9.3 ELECTRICAL DRAWING TYPES

Facilities electrical drawings include, as required, the following types of drawings.

a. Diagrams

   (1) Block diagram

   (2) Single-line diagram

   (3) Schematic diagram

   (4) Connection diagram

b. Electrical plans

   (1) Electrical-equipment arrangement

   (2) Building load-center substation

   (3) Building or structure electrical-power distribution (interior)

   (4) Exterior electrical-power distribution

   (5) Building or structure lighting (interior)

   (6) Exterior lighting

(7) Building or structure grounding (interior)

(8) Exterior grounding

(9) Cathodic protection

(10) Building or structure communications

(11) Exterior communications

(12) Fire detection and alarm system

The drawings for facilities need not contain all drawing types. For example, facilities consisting only of a single building and a relatively simple electrical system may not need a block diagram if the information normally found in it is effectively conveyed by other drawing types.

Different and various combinations of drawing types may be shown on the same drawing. When this method is used, the type of each delineation shall be identified below the area where it is displayed, e.g., SCHEMATIC DIAGRAM.

9.4 GENERAL REQUIREMENTS

The following general requirements shall be applicable when preparing electrical drawings:

a. The number of drawings for a facility shall be kept to a minimum, consistent with clarity for construction.

b. Electrical and electronic symbols, when used, shall be in accordance with KSC-STD-152-1.

c. An electrical drawing does not have to include delineation; e.g., it may contain only explanatory text, tables, etc.

d. Electrical delineations shall not generally be included on architectural, structural, civil or mechanical drawings; however, the complexity of the facilities is the deciding factor that determines where the electrical delineation types appear. For example, it is possible that a construction drawing may contain delineations for all disciplines.

9.5 DIAGRAMS

9.5.1 DEFINITION. An electrical diagram is a graphic explanation of the manner in which an electrical installation or system performs its intended function. It depicts the characteristics and relationships of items within a specified area of functional system by the use of symbols and lines.

The term "item," as it is used in the text pertaining to diagrams, shall be considered as encompassing the following:

a. Electrical components.

b. Electrical devices.

c. Installed electrical equipment.

d. Parts to which electrical connections are made.

9.5.2 GENERAL REQUIREMENTS. The following general requirements shall apply when preparing diagrams:

a. Diagrams, depending upon the type, shall show flow, function, or physical connections.

b. The layout of electrical diagrams shall be such that the main features are prominently shown. The parts of the diagram shall be spaced to provide an even balance between blank spaces and lines. A sufficient blank area should be provided in the vicinity of symbols to avoid crowding of notes or reference information. Large blank spaces shall be avoided unless provision is being made for additions.

c. Diagram linework shall be of medium line width except where otherwise specified in the respective paragraph for a particular diagram type.

d. Any one set of electrical drawings shall include either a single-line diagram, a schematic diagram, or both.

e. Drawing titles shall include the delineation type, as follows, when the drawing contains only a single delineation:

(1) BLOCK DIAGRAM

(2) SINGLE-LINE DIAGRAM

(3) SCHEMATIC DIAGRAM

(4) CONNECTION DIAGRAM

f. When combinations of electrical delineation types are included on the same drawing, the entry for the type of drawing in the title block shall adequately define the drawing content. Typically, if a drawing combines all of the delineation types, the entry in the title block shall be ELECTRICAL DIAGRAMS.

g. Facilities diagrams shall consist of one or more of the following types:

(1) Block diagram

(2) Single-line diagram

(3) Schematic diagram

(4) Connection diagram

h. When a circuit contains parts which need to be shown grouped, the grouping shall be indicated by means of a boundary-line enclosure. Typical groupings are systems and areas.

i. Lines between blocks or symbols shall be vertical or horizontal, with the use of diagonal lines restricted.

j. Lines shall be as direct and short as possible without the use of diagonal lines.

k. Lines shall have a minimum number of turns and crossings.

l. The nomenclature or other designations used for identification of blocks, symbols, equipment, etc., shall be in accordance with the device, equipment marking, or the standards established for the facilities.

m. Interface reference for flow lines, etc., that are "from" or "to" features not included on the drawing shall have a directive arrow and all applicable cross-reference identification shall be clearly shown.

n. Functional or physical area orientations that are encompassed by bold dashed lines to increase clarity of the drawing shall be identified by note or other reference.

o. Notes concerning physical or functional information shall be used, as required, when it is necessary to have an accompanying description to clarify the graphic presentation and provide increased utility to the diagram.

p. More than one type of diagram may be included on one drawing; however, they should usually be kept separate from plan drawings.

q. Connecting lines should be drawn horizontally or vertically and with as few bends and crossovers as possible. When connecting lines are drawn parallel, the spacing between lines after reduction shall be legible in copies reduced to 50 percent of their original size. Parallel lines should be arranged in groups, preferably three per group, with approximately double spacing between groups of lines. In grouping parallel lines, the

function relation of the lines should be considered. When a number of parallel lines connect between points which are relatively far apart, the lines may be grouped as shown in figure 9-1.

r. A specific diagram type may include supplementary information. For example, to increase usefulness, a block diagram or connection diagram may include schematic information, while a schematic diagram may include wiring information. The title-block entry shall be based upon the major purpose of the drawing.

9.5.3 BLOCK DIAGRAM

9.5.3.1 Definition. A block diagram describes the concepts, organization, or both of a facility or equipment by the use of blocks representing functions or groups of functions. Interconnecting lines establish the relationship between blocks and indicate the direction of information flow. (See figure 9-2.)

A block diagram is used to give an overall picture of a facility or system and the interrelationships between components of that facility or system. It may be used to indicate layout, function, or general design.

9.5.3.2 Requirements. The following requirements shall be applicable when preparing a block diagram:

a. A block diagram shall be presented in as simple a form as possible.

b. Blocks shall represent electrical systems or parts thereof or major elements of an electrical system or circuit. Symbols may be used to increase the utility of the diagram.

c. Lines connecting blocks shall indicate relationships, direction of flow, sequence of operation, etc.

d. The arrangement of lines and blocks on the diagram shall show action or energy flow in functional sequence from top to bottom, left to right, or both, starting at the top left or top center and ending at the bottom or bottom right. (See figure 9-2.)

e. Identifying nomenclature shall be included within the blocks, as shown in figure 9-3.

f. Connection lines shall be labeled where necessary for clarification. (See figure 9-4.)

g. When dashed lines are used for more than one purpose on a block diagram, these purposes shall be made clear by label, legend, or note.

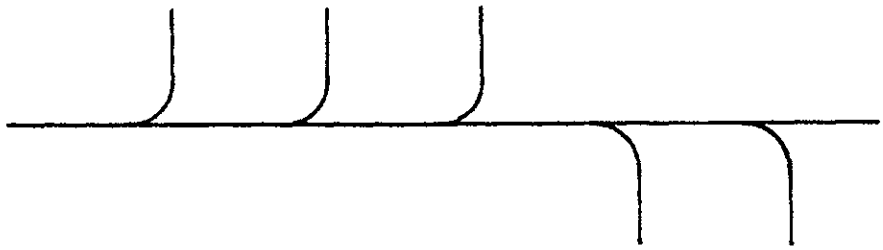

Figure 9-1. Grouping of Leads

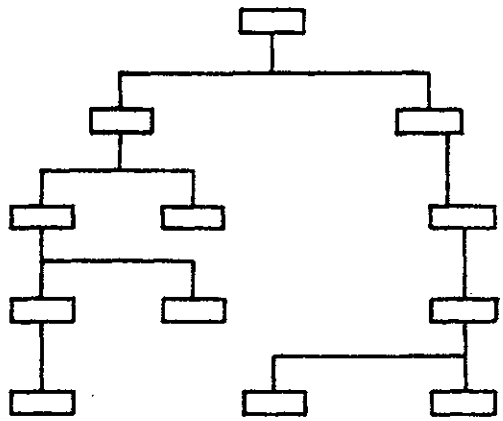

A. TOP TO BOTTOM

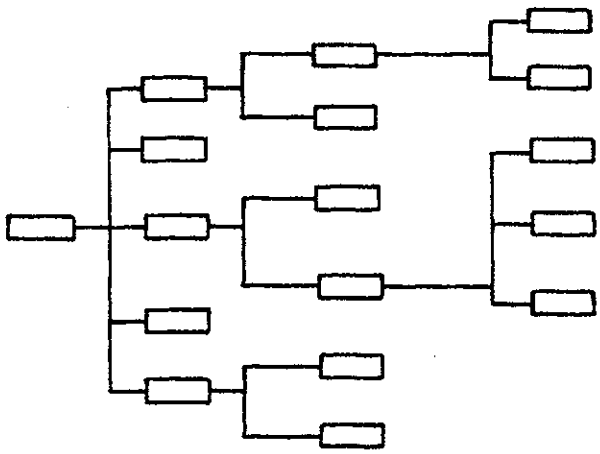

B. LEFT TO RIGHT

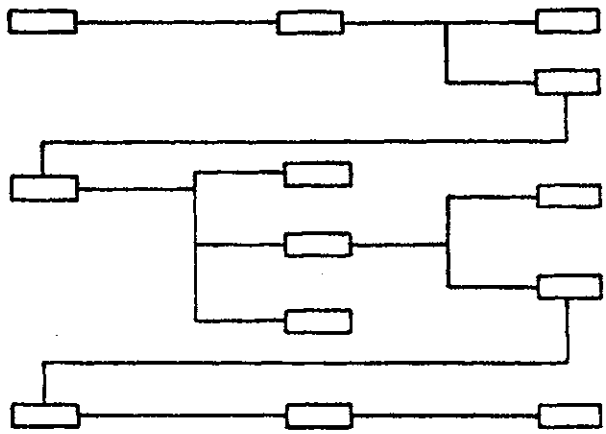

C. COMBINATION - TOP TO BOTTOM AND LEFT TO RIGHT

Figure 9-2. Block Diagram Arrangements

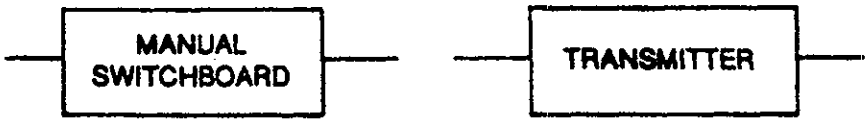

Figure 9-3. Identifying Nomenclature

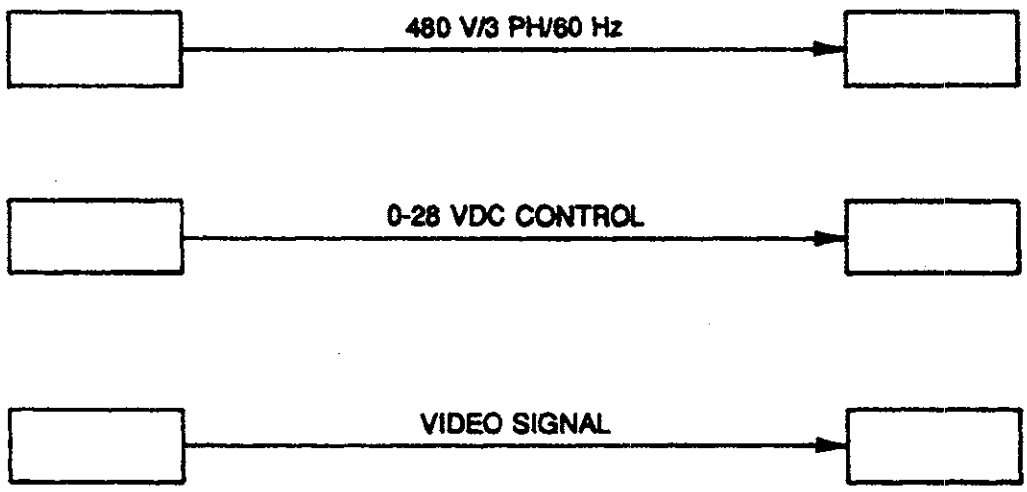

Figure 9-4. Labeling of Connection Lines

h. Connecting lines may include arrows to further define the circuit flow, as shown in figure 9-5.

i. Dashed lines may be use to indicate optional items or testing functions, as shown in figure 9-6.

j. Groups of symbols may be encompassed by bold, dashed lines to give further functional or physical-area orientation, as shown in figure 9-7. When physical-area orientation is required, the arrangement requirements concerning signal flow and function sequence may be disregarded.

k. Block diagrams may be made for any level of facilities activity. For example, a block diagram at the highest level may be made for a complete facility, and a lower-order block diagram may be made for an area, etc.

l. When practicable, dimensions, symbols, etc., may be included.

m. Related mechanical or electromechanical apparatus may also be included on block diagrams. Mechanical connections between such elements shall be illustrated with dashed lines connecting the applicable blocks, with the type of connection identified on the drawing; e.g., water pipe, solid shaft, pneumatic line, etc.

n. If the form of the circuit involves multiple sources and common or similar circuits, or variations thereof, tabulations may be used. The common delineation shall be drawn completely and a tabulation chart made to note the differences.

o. If a block diagram must be divided and placed on more than one drawing, the division should cause the least confusion in the separation of information and should be made at the point of minimum information transfer.

p. See figure 9-8 for a typical block diagram.

9.5.4 SINGLE-LINE DIAGRAM.

9.5.4.1 Definition. A single-line diagram shows, by means of single lines and graphic symbols, the course of an electrical/electronic circuit devices or system of circuits and the component devices or parts used therein.

The principal objective of the single-line diagram is to record a maximum of significant information in a minimum of space. Facilities single-line diagrams are must useful in representing power distribution, communication systems, microwave systems, and in the study and explanation of the facilities.

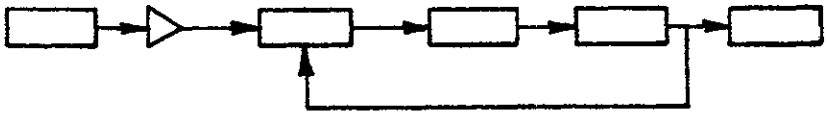

Figure 9-5. Circuit Flow

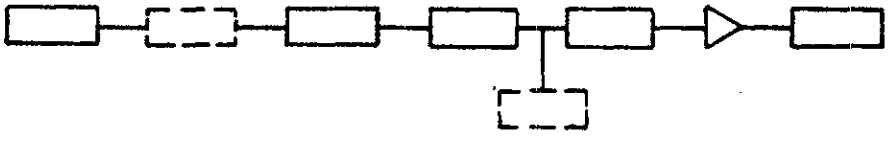

Figure 9-6. Use of Dashed Lines to Show Optional Items

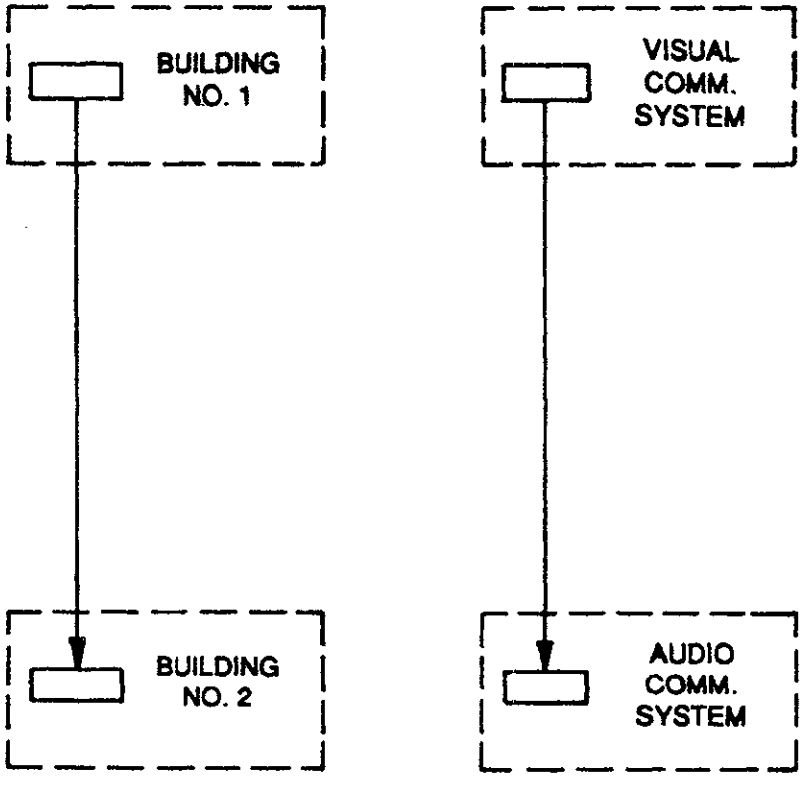

Figure 9-7. Dash Line Overlays for Additional Orientation

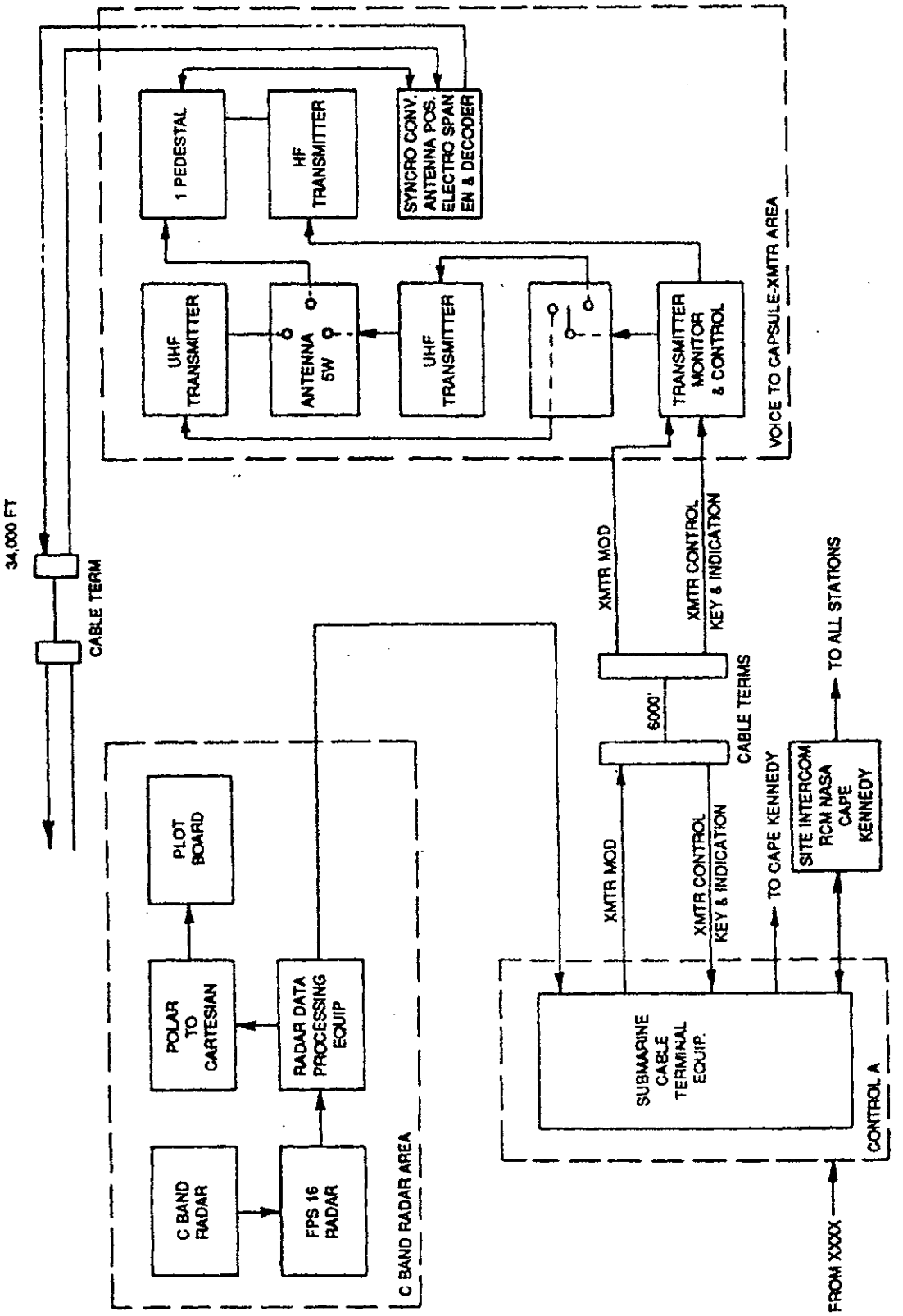

Figure 9-8. Typical Block Diagram

A single-line diagram conveys basic information about the operation of a circuit or system of circuits. It omits much of the detailed information shown on schematic or connection diagrams. A single-line diagram indicates, in more detail then a block diagram, information which will subsequently be shown on other diagrams. (See figure 9-9.)

9.5.4.2 Requirements. The following requirements shall apply when preparing a single-line diagram. In addition to these requirements, the requirements specified for schematic diagrams in 9.5.5. shall also apply.

a. Only one phase of a multiphase system and one polarity of dc shall be used to simplify the circuit. Figure 9-10 is a comparison between a schematic diagram and a single-line diagram for the same portion of a circuit.

b. The arrangement of the single-line diagram shall be such that the electrical energy or signal flow is shown from top to bottom, from left to right, or both. Items of higher potential or earlier usage shall be positioned ahead of those with lesser potential or later usage. (See figure 9-11.)

c. Description nomenclature, when used, shall be placed above or to the right of the subject element or connecting line unless other placement has a distinct advantage for the particular application.

d. All symbols shall be of the single-line type.

e. A single-line diagram is termed functional if various line widths are used to separate categories of circuits. When this type of diagram is made, the line widths shall be defined in a legend. No more than two widths of lines shall be used. Heavy-width lines represent power circuits and medium-width lines represent control and measurement circuits. (See figure 9-12.)

f. Rated voltages shall be given as supplementary information for equipment items.

g. Nominal voltages shall be used for supplementary information in the designations of systems to define the voltage class.

h. Transformer voltage representation shall use the dash (-) and slant (/) as follows:

   (1) The dash is used to separate the voltage ratings of separate windings on a transformer, e.g., 13.8 kV-480V.

   (2) The slant is used to separate multiple voltages or to indicate taps of the same winding, e.g., 208/120.

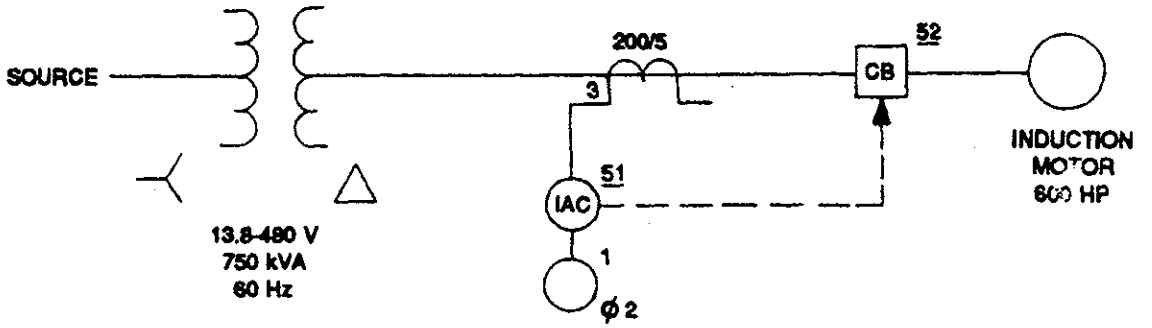

Figure 9-9. Single-Line Diagram

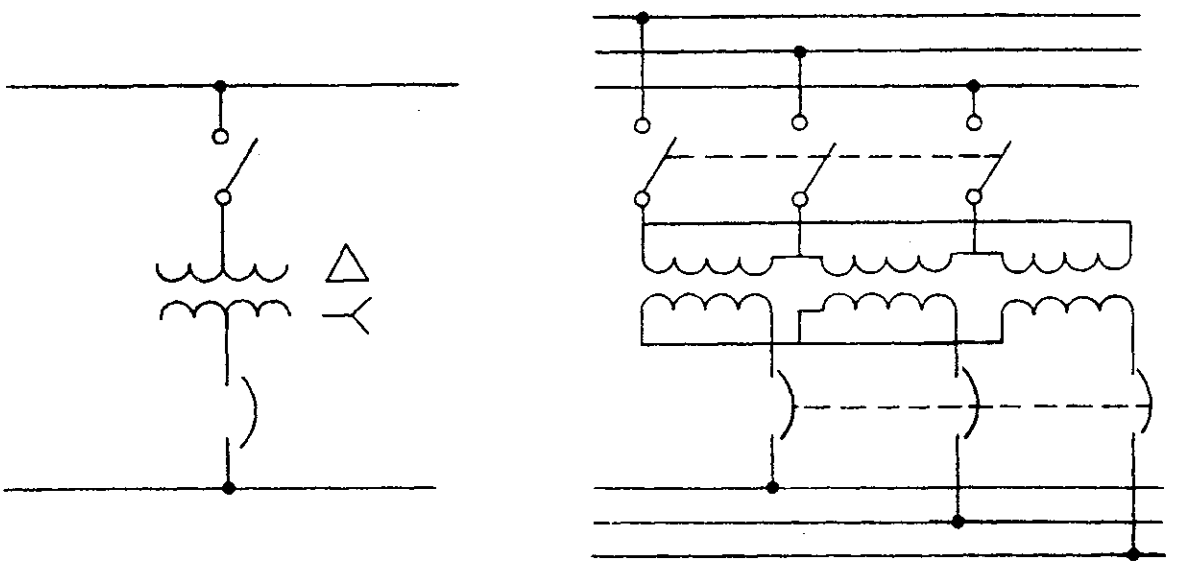

A. SINGLE-LINE FORM

B. SCHEMATIC FORM

Figure 9-10. Comparison of Single-Line and Schematic Diagrams

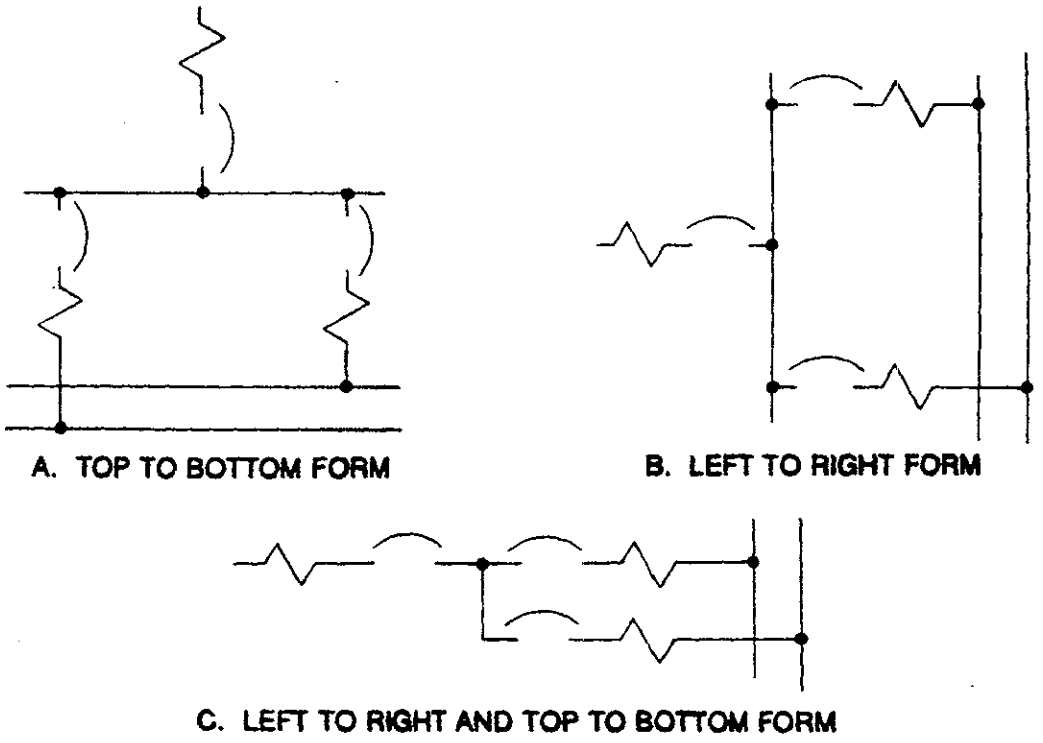

Figure 9-11. Arrangement of Single-Line Diagrams

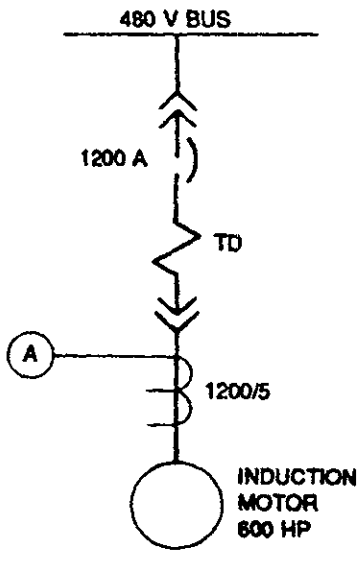

Figure 9-12. Single-Line Diagram (Functional)

i. Alternatively, the voltage of each transformer winding may be shown adjacent to the winding symbol. (See figure 9-13.)

j. Transformation ratios shall use the slant (/) as the separation between the values. (See figure 9-14.)

k. A single-line diagram may show only the power circuits or may be extended to include secondary and control circuits. (See figure 9-9.)

l. The single-line diagram may include pertinent rating information about its items, e.g., voltages of potential transformers, ampere rating of current transformers, interrupting capacity and trip ratings of circuit breakers, and motor power ratings. (See figure 9-15.)

A single-line diagram may also include wire and cable information and further descriptions of elements; i.e., categories, models, drawing numbers, functional designations, etc. (See figure 9-16.)

m. Winding connecting symbols shall be used adjacent to the symbols for the transformer windings. (See figure 9-17.) All the lines in one symbol shall be parallel to a corresponding line in the symbol for the other winding. (See figure 9-18.)

n. Polarity for transformers shall be indicated by the use of the polarity marking symbol or the use of letter or letter and number combinations commonly marked on transformers. Figure 9-19 illustrates the use of letter and number combinations to indicate polarity.

o. The quantity of a particular device may be indicated at a single-line symbol when necessary. (See figure 9-20.)

The numeral 2 adjacent to the magnetic overload device indicates that there are two circuits like the one shown.

A note shall be included with the legend or notes indicating the function of the quantity numeral, e.g., THE NUMBER ADJACENT TO RELAYS DENOTES QUANTITY.

Figure 9-21 illustrates further the use of a numeral in designating quantity for relays, etc.

p. Device lists shall be incorporated on the drawing when functional designations are used. (See figure 9-22.)

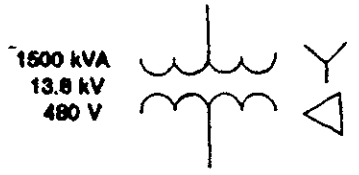

Figure 9-13. Transformer Voltage Representation

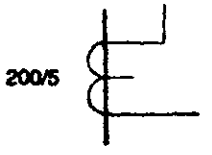

Figure 9-14. Current Transformer Ratio

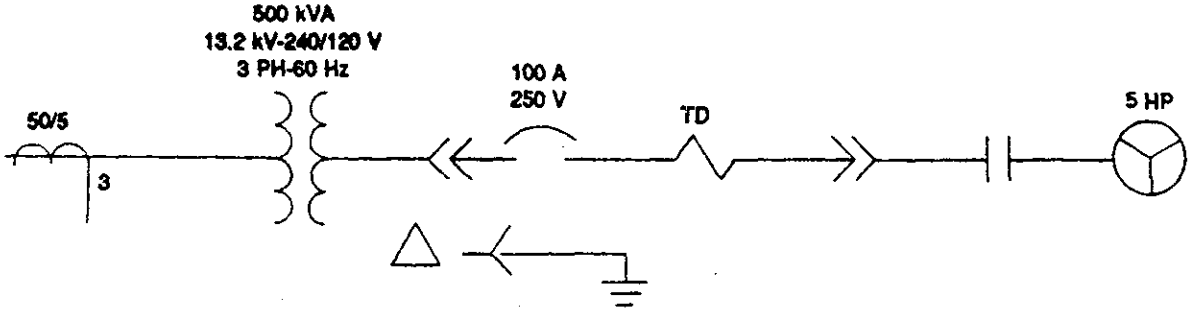

Figure 9-15. Pertinent Rating Information on Single-Line Diagrams

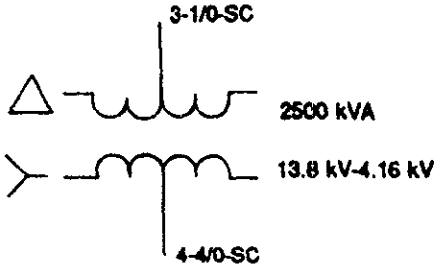

Figure 9-16. Appropriate Information Shown on Single-Line Diagrams

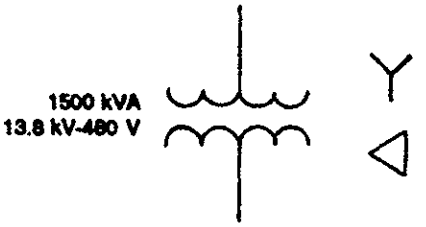

Figure 9-17. Transformer Information

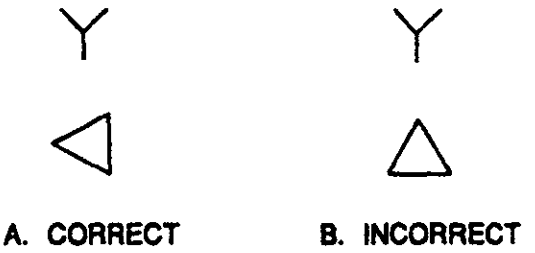

Figure 9-18. Winding Connection Symbols

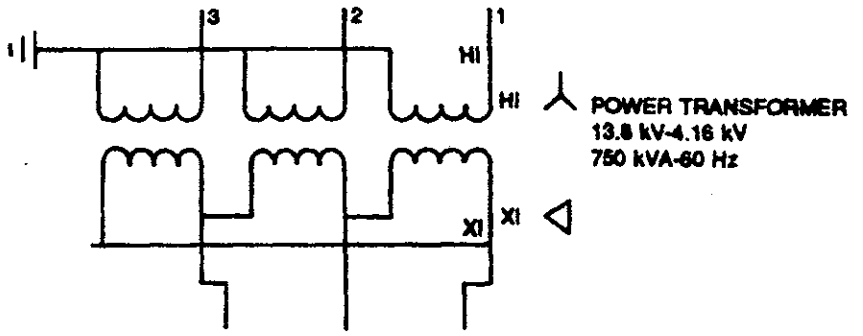

Figure 9-19. Polarity Markings for Transformers

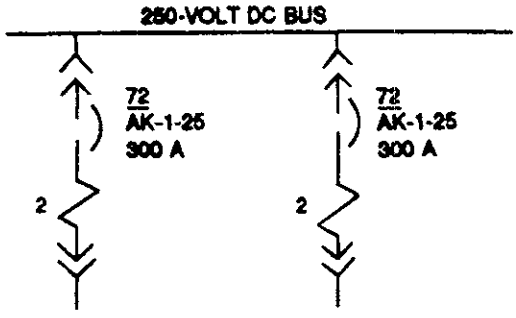

Figure 9-20. Device Quantity for Transformers

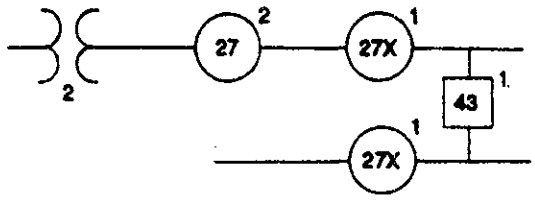

Figure 9-21. Device Quantity Use

Device Function Numbers

1A	Master Element (Water Level)
1M	Master Element (Control Switch)
8	Control Power Switch
8D	Control Power Circuit Breaker for 20D
20D	Discharge Valve
20D/CS	Control Switch for 20D
20D/C	Closing Contactor for 20D
20D/O	Opening Contor for 20D
23	Temperature Control Device
38	Bearing Protective Device
43	Manual Transfer Switch
47	Phase Sequence Voltage Relay
49	Machine Thermal Relay
49D	Thermal Relay for 20D Motor
51	AC Time Overcurrent Relay
51N	AC Time Overcurrent Relay (Neutral)
52	AC Circuit Breaker
52II	Housing Auxiliary Position Switch
52X	Auxiliary Relay for 52 (Closing)
52Y	Auxiliary Relay for 52 (Antipump)
86	Locking-Out Relay

Figure 9-22. Example of a Device List

q. Protective relays may be included in a single-line diagram with operator dash lines to the device that the relay acts upon.

9.5.5 SCHEMATIC DIAGRAM.

9.5.5.1 Definition. A schematic diagram shows an electrical/electronic circuit or system of circuits by means of lines and graphic symbols located in sequence of function. (See figure 9-23.)

A schematic diagram is useful for demonstrating the electrical relationships of circuits and device elements.

A schematic diagram emphasizes the device elements of a circuit, as distinguished from the physical arrangements of conductors, devices, etc., of a circuit system. The circuit layout follows the signal or transmission path from input to output, left to right, or in the order of functional sequence, without regard to the actual physical shape, size, or location of the device. It shows in straight-line form, all circuits and items within a defined area.

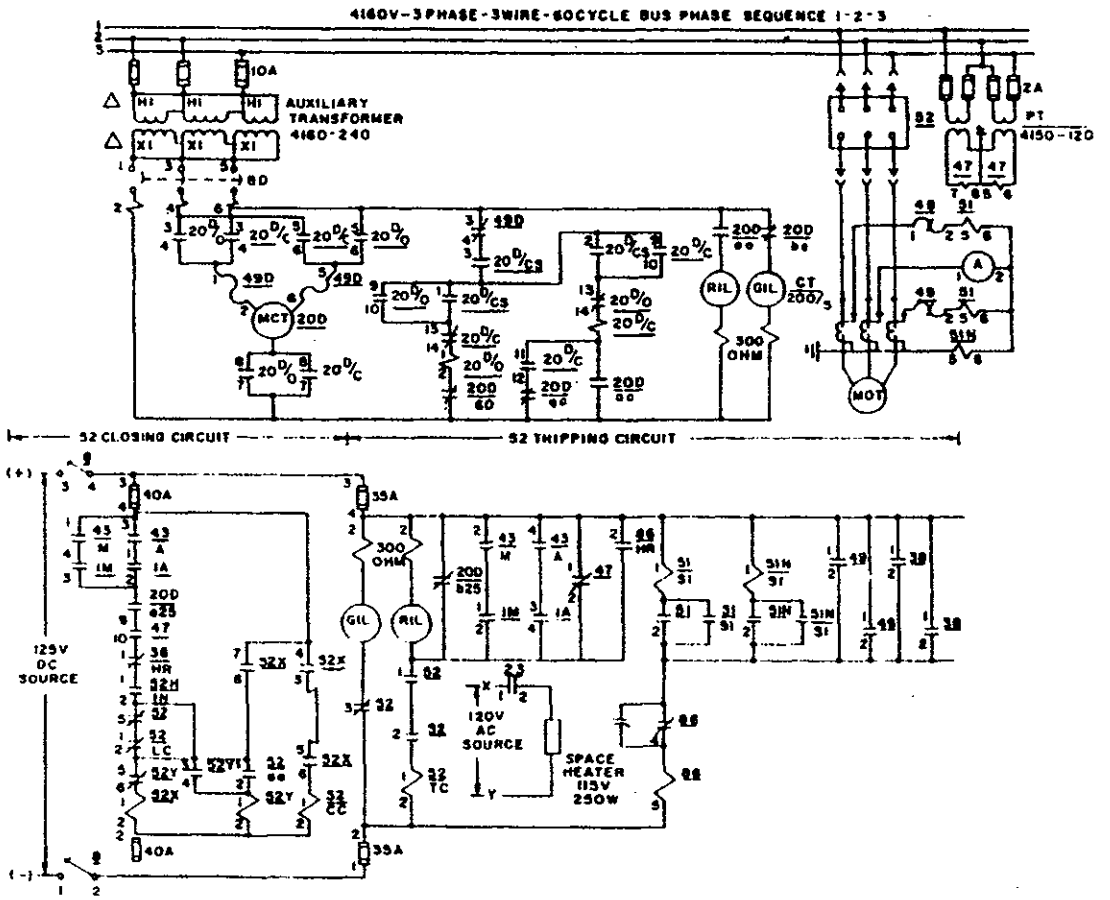

Figure 9-23. Typical Schematic Diagram

9.5.5.2 Requirements. The following requirements shall apply when preparing a schematic diagram:

a. Electrical item symbols shall be shown in their deenergized state unless otherwise noted on the drawing. The size of like symbols may vary from one diagram to the next but shall be the same within any one diagram.

b. The layout shall clearly indicate sequential function of the circuitry.

c. The diagram shall be arranged so that the user can easily follow the functional relationships (input to output, source to load, sequence, etc.). Layout should be such that the path of energy flows from left to right, top to bottom, or a combination thereof. (See figure 9-24.)

d. Items of the circuit shall be assigned functional designations per 9.7. The designations shall be placed adjacent to their symbols, preferably above or to the right. (See figure 9-25.)

e. Electrical values and other functional information shall be included as necessary for analysis of the circuit. Types of information that may apply are as follows:

   (1) Current, voltage, and interrupting rating of circuit breakers

   (2) Primary and secondary voltages and kVA ratings of power transformers

   (3) Voltage and kVA or kW ratings of generators

   (4) Voltage and power ratings and types of motors

   (5) Ratings and types of loads on feeder circuits

   (6) Ratings of power and control sources

   (7) Ratings of instrument transformers, fuses, resistors, capacitors, and contactors

   (8) Resistance to ground, inductance, and temperature ratings

f. Descriptive nomenclature shall be used to label all inputs and outputs of the schematic diagram. Operational nomenclature (for example, PUSH TO FIRE) should be placed adjacent to the pushbutton switch that will have such a label. Alternate placement may be in a table, legend, or general note.

g. In specifying resistance, capacitance, and inductance values, the overall objective shall be to use forms of expression which will require the use of the fewest ciphers. In

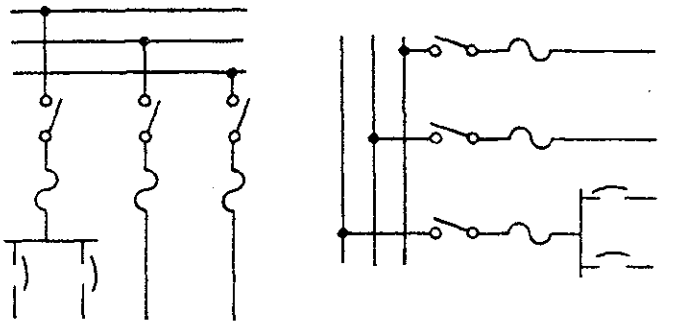

A. TOP TO BOTTOM

B. LEFT TO RIGHT

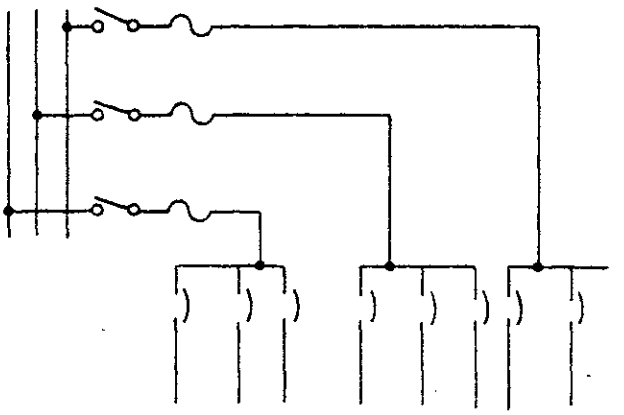

C. COMBINATION TOP TO BOTTOM AND LEFT TO RIGHT

Figure 9-24. Circuit Arrangements

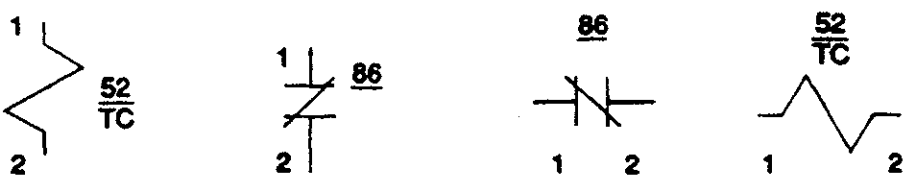

Figure 9-25. Preferred Placement of Functional Designations

numerical values of 4 digits, the comma shall be omitted. For example, 4700 instead of 4,700.

Abbreviations of units of measurement which would be applicable throughout the diagram shall be specified by a general drawing note. Only the numerical value need be specified adjacent to the applicable graphic symbol on the diagram. Preferred arrangements are shown in figure 9-26.

h. Resistance values up to and including 999 ohms (Ω) shall be expressed in ohms, e.g., 500 Ω.

Values from 1000 to 999,999 ohms shall be expressed in kilohms (kΩ) by use of the multiplier prefix symbol k, e.g., 56 k instead of 56,000 Ω.

Values of 1,000,000 ohms and greater shall be expressed in megohms (MΩ) by use of the multiplier prefix symbol M. For example, 3.3 M instead of 3300 k, or 3,300,000 Ω.

i. Capacitance values up to and including 9999 picofarads shall be expressed in picofarads (pF). Capacitance of 10,000 picofarads and greater shall be expressed in microfarads (μF) (1 μF = 1,000,000 pF). For example, 92,000 picofarads shall be expressed as 0.092 μF. (The term "picofarad" has replaced the older term "micromicrofarad.")

j. Inductance values up to 999 microhenries shall be expressed in microhenries (μH). Values from 1000 to 999,999 μH shall be expressed in millihenries (mH). Values of 1,000,000 mH and greater shall be expressed in henries (H). For example, 2 μH instead of 0.002 mH; 5 mH instead of 0.005 H or 5000 μH.

k. For interrupted single lines, the line identification may also serve to indicate destination, as shown in figure 9-27.

l. When interrupted lines are grouped and bracketed, line identifications shall be as shown in figure 9-28. Bracket destinations or connections may be indicated either by means of notations outside the brackets, as shown in figure 9-28, or by means of a dashed line as shown in figure 9-29. When the dashed line is used to connect brackets, it shall be drawn so that it cannot be mistaken for a continuation of one of the bracketed lines. The dashed line shall originate in one bracket and terminate in no more than two brackets. Letters, numbers, abbreviations, or other identifiers for interrupted lines shall be located as close as possible to the point of interruption.

m. The relation of switch position to circuit function shall be shown on schematic diagrams. For simple toggle switches, position can be identified with notations such as ON - OFF. For more complex switches, position-to-function relations may be shown either near the switch symbol or at some convenient location on the drawing. Figure 9-30 shows how either form of representation be used for a

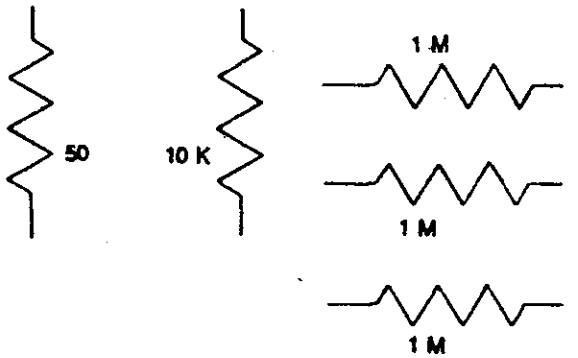

Figure 9-26. Numerical Value Preferred Locations

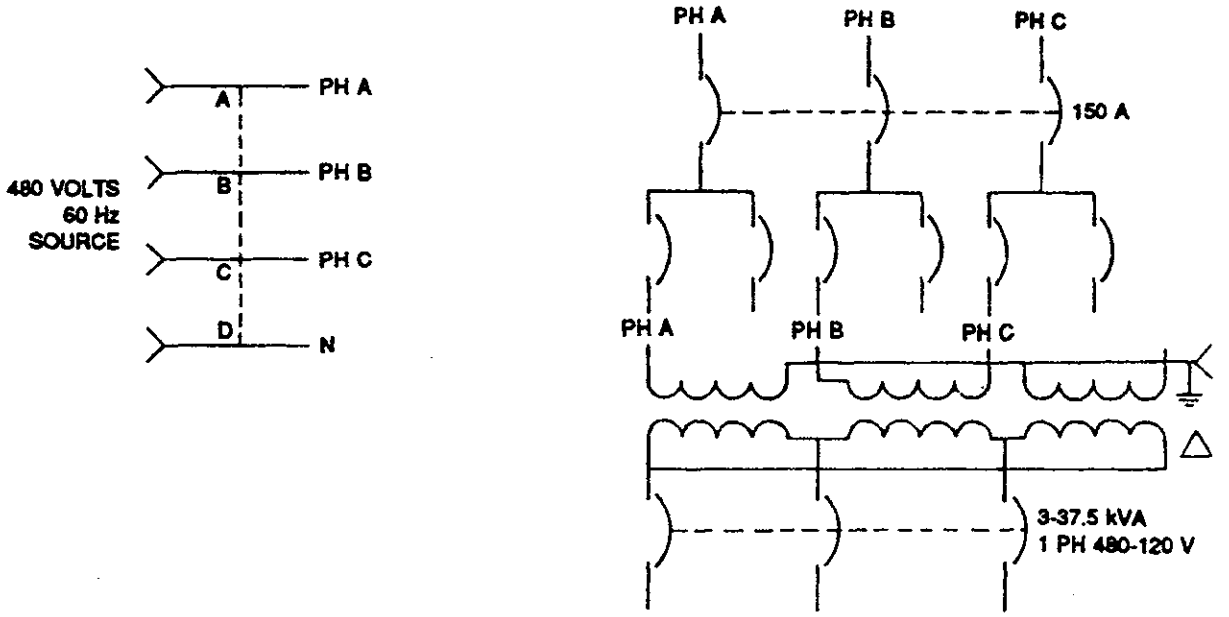

Figure 9-27. Identification of Interrupted Lines

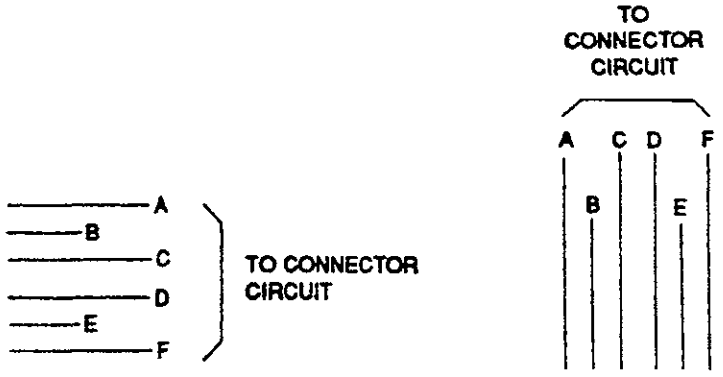

Figure 9-28. Typical Arrangement of Line Identifications and Destinations

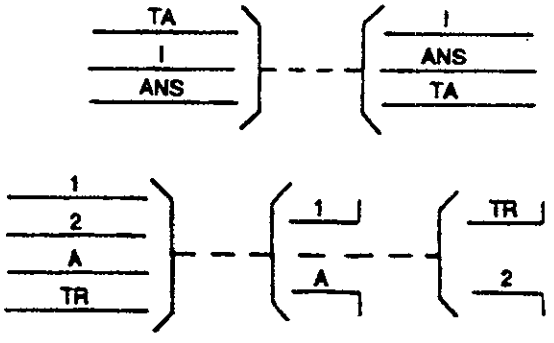

Figure 9-29. Interrupted Line Interconnected by Dashed Lines

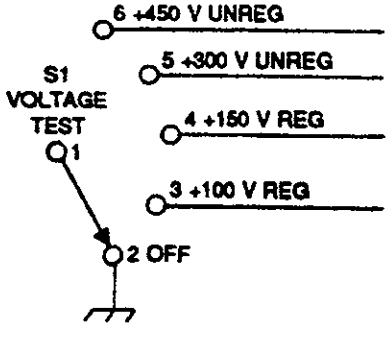

FUNCTIONS SHOWN
AT SYMBOL

S1 VOLTAGE TEST	
FUNCTION	TERM
OFF	1-2
+100 V REG	1-3
+150 V REG	1-4
+300 V UNREG	1-5
+450 V UNREG	1-6

FUNCTIONS SHOWN
IN TABULAR FORM

Figure 9-30. Position-Function Relationships for Rotary Switches (Optional)

multiposition rotary switch. Use the tabular form to present supplementary information for rotary switches performing involved functions such as those illustrated in figure 9-31.

n. When parts of rotary switches are designated S1A, S1B, S1C, etc., the suffix letters A, B, C, etc., shall start from the knob or actuator end and then be assigned clockwise from this position. Each section of the switch shall be shown viewed from the same end, as shown in figure 9-32. When both sides of a rotary-switch section are used to perform separate switching functions, the front (knob or actuator end) and rear symbols should be differentiated by appropriately modifying the reference designation; for example, S1A FRONT AND S1A REAR.

o. When portions of connectors and terminal boards are separated on the diagram for drawing convenience, the words PART OF shall precede their designation labels. (See figure 9-33.) Otherwise each individual terminal shall be labeled with its reference designation. When the separation of portions of connectors or terminal boards on the same drawing becomes extensive, the separated parts may be identified as individual terminals, as shown in figure 9-34. If individual terminals from different parts such as connectors are intermixed, mechanical connecting lines shall be omitted.

p. Single-line symbols shall be used to represent coaxial and waveguide parts on microwave circuit schematic diagrams. For the auxiliary portions of the circuit such as power supply or controls, either single-line or complete symbols may be used.

q. The type of transmission path, such as coaxial or waveguide, need be indicated only at each end of a path as long as the path remains of the same type, even though various items are included within the path. Additional recognition symbols shall be shown as required for clarification. (See figure 9-35.)

r. Transmission-path separable connectors or equipment flanges shall be identified only if it is necessary to indicate the electrical function or separable feature of these parts, such as the ability to insert a test circuit or item. (See figure 9-36.)

s. Notes shall be used, as required, to indicate that certain path sections of the waveguide are sealed from other paths of the circuit. A typical note is THIS CONNECTION IS SEALED TO MAINTAIN A PRESSURE DIFFERENCE OF 100 kPa GAGE (15 PSIG).

t. When mechanical functions are closely related to certain electrical functions, the mechanical components shall be linked to the applicable graphic symbols of the schematic diagram using dashed lines.

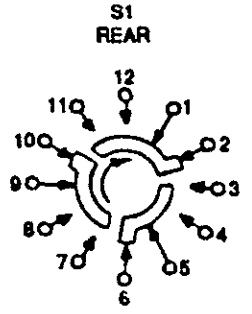

(SWITCH VIEWED FROM FRONT)

SYMBOL ON
SCHEMATIC DIAGRAM

S1		
POS	FUNCTION	TERM
1	OFF(SHOWN)	1-2, 5-6, 9-10
2	STANDBY	1-3, 5-7, 9-11
3	OPERATE	1-4, 5-8, 9-12

FUNCTIONS SHOWN
IN TABULAR FORM

Figure 9-31. Position-Function Relationships for Rotary Switches (Tabular)

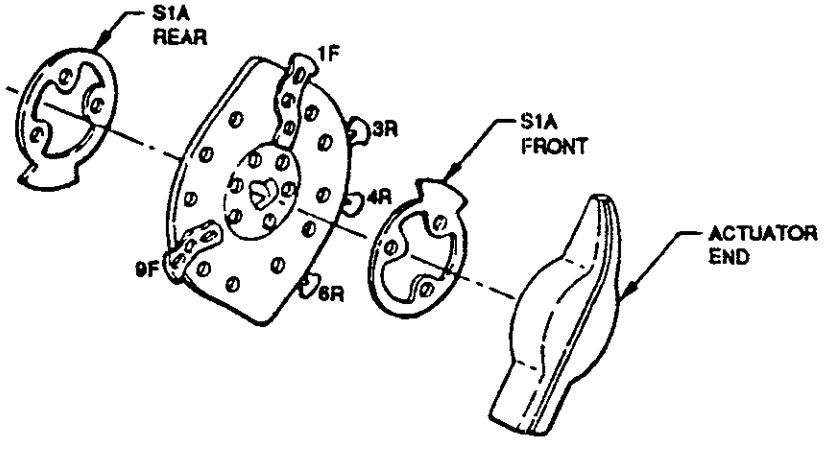

A. TYPICAL SWITCH SECTION

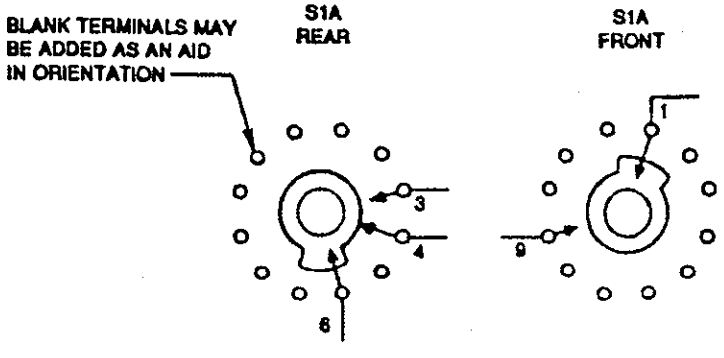

B. GRAPHIC SYMBOL

Figure 9-32. Typical Development of a Graphic Symbol - Complex Rotary Switches

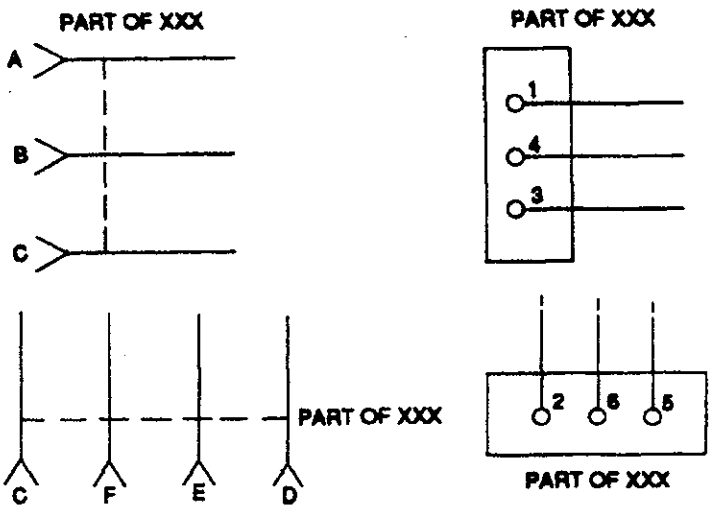

Figure 9-33. Use of Part of Prefix

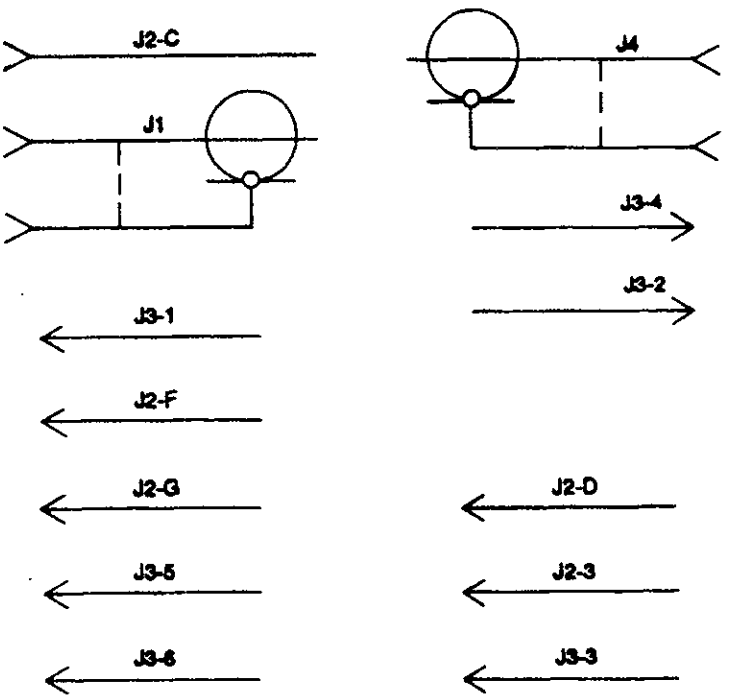

Figure 9-34. Identification of Individual Terminals

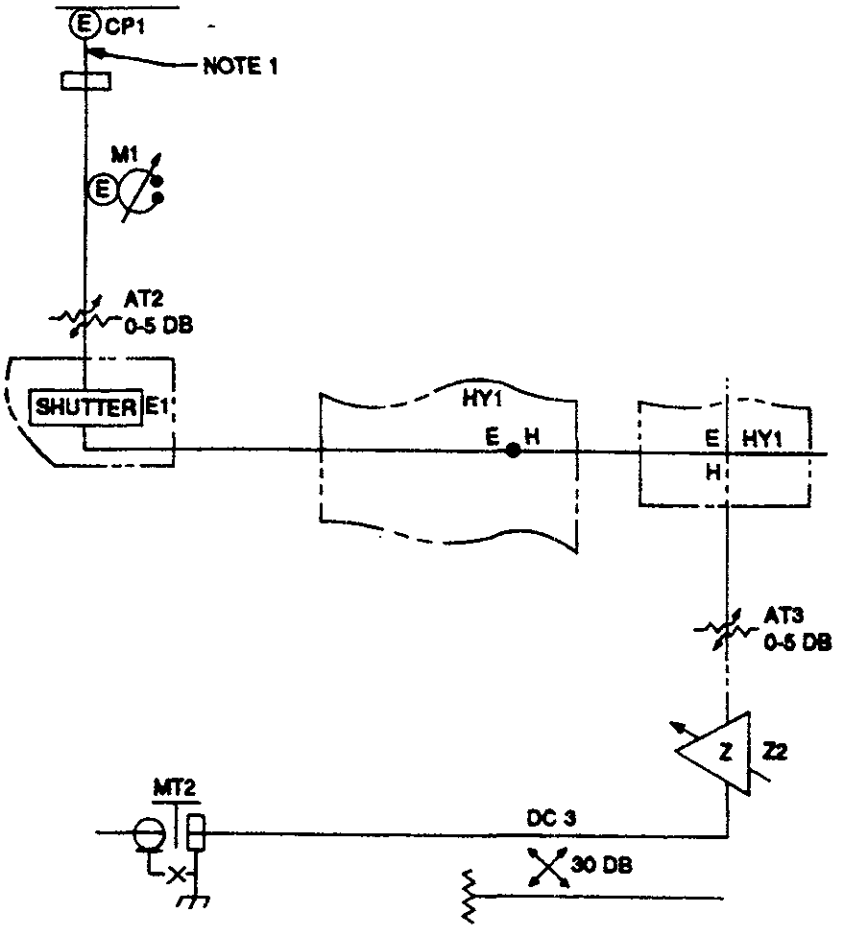

Figure 9-35. Transmission Path Recognition Symbol

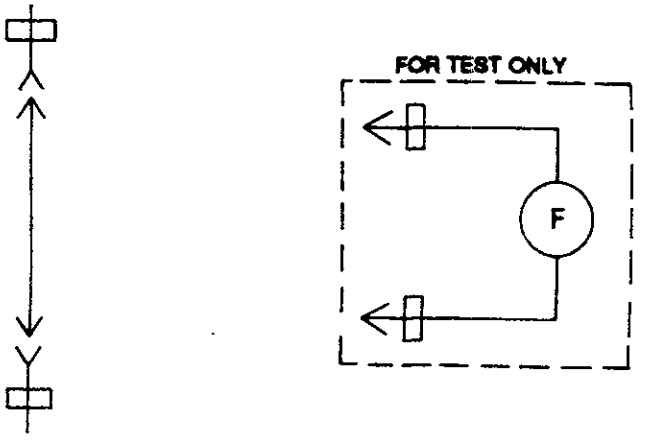

Figure 9-36. Test Circuit Relationship

u. Terminal identifications may be added to graphic symbols to indicate actual physical markings appearing on or near item terminations. When the terminals of items such as replays, switches, or transformers are not shown or marked on the item, number or letter identifications shall be arbitrarily assigned. When terminal identifications are arbitrarily assigned, the diagram shall include an explanatory note consisting of a simplified terminal-location diagram that relates the terminal nomenclature to the physical location on the item. For examples of terminal numbering and simplified terminal-location diagram, see figures 9-37 and 9-38. When terminals or leads of multilead items are identified on the item by a wire color, code, letter, number, or geometric symbol, this identification shall be shown on or near the connecting line adjacent to the symbol. (See figure 9-39.)

v. When rotary-type, adjustable resistors are shown on schematic diagrams, indicate the direction of rotation with respect to an arbitrary reference point. The rotary motion is referred to as clockwise or counterclockwise when rotation is viewed from the knob or actuator end of the control. The preferred method of terminal identification is to designate the terminal adjacent to the movable contact with the letters CW for a clockwise position. (See A in figure 9-40.) Numbers may be used with a resistor symbol (see B in figure 9-40). Additional fixed tabs may be numbered sequentially, 4, 5, etc., as shown in C in figure 9-40.

w. Subassemblies such as mixers may be shown either with all internal items indicated or by an overall symbol.

x. In showing and identifying contacts of coaxial connectors on schematic diagrams, the single-line diagram representation shown in figure 9-41 is preferred. The complete diagram representation of figure 9-42 may be used to show shield continuity.

y. Subdivisions of items may be identified by adding a suffix letter to the designation of the part. For example, CB1A and CB1B identify electrically separate sections of dual circuit breaker CB1. Where multiple items are physically integral but shown separately, they shall be identified by suffix letters. Where they are shown together within an enclosure, the assignment of suffix letters is optional. See figure 9-43 for an example of this method.

z. Portions of multi-item components may be shown at different locations on the schematic diagram. In such cases, suffix letters added to reference designations shall indicate the relationships of the subdivisions to the whole component.

aa. In schematic diagrams, reference designations for switching circuits may be aligned along one edge of the circuit instead of being shown at the symbol. Mechanical linkage lines of multi-item switching devices and reference designations for individual contacts may be omitted when the association of parts is obvious.

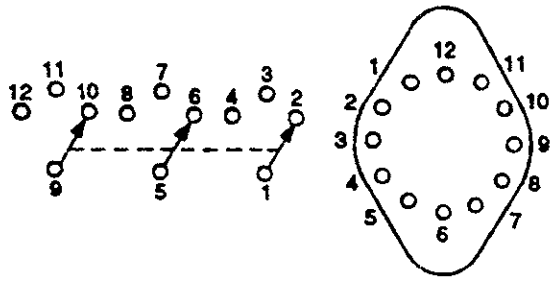

Figure 9-37. Terminal Identification Example - Rotary Switch

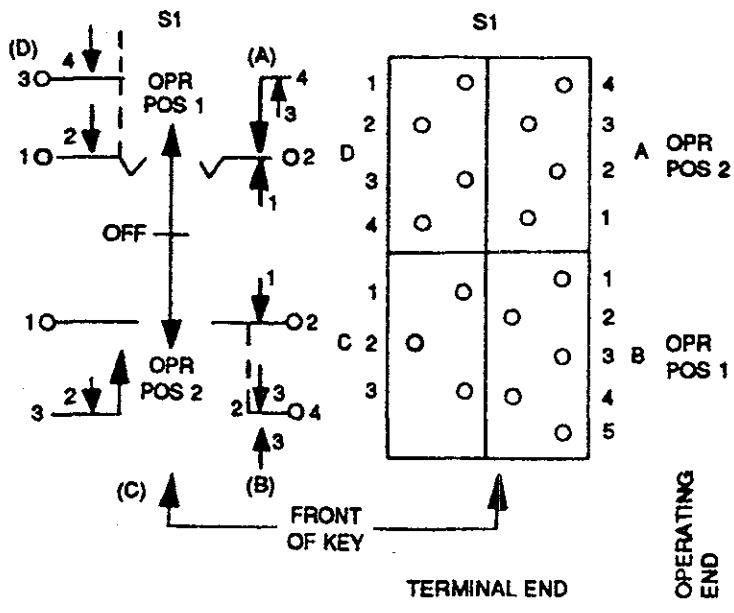

Figure 9-38. Terminal Identification Example - Key Switch

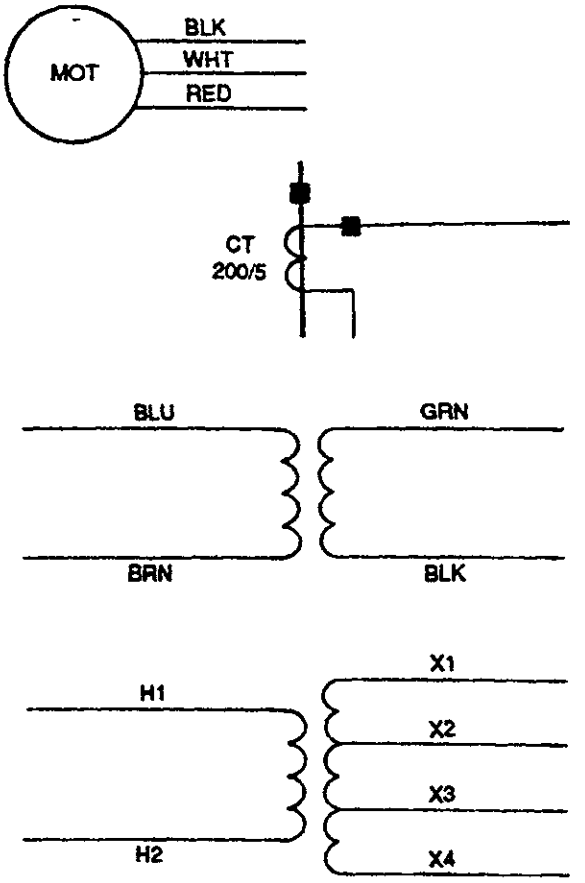

Figure 9-39. Terminal Identification

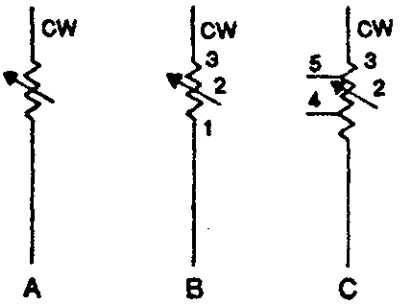

Figure 9-40. Terminal Identification - Adjustable Resistor

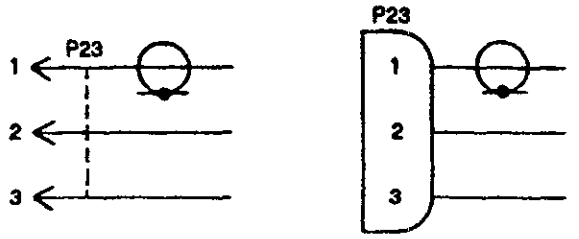

Figure 9-41. Coaxial Cable and Connector - Single-Line Representation

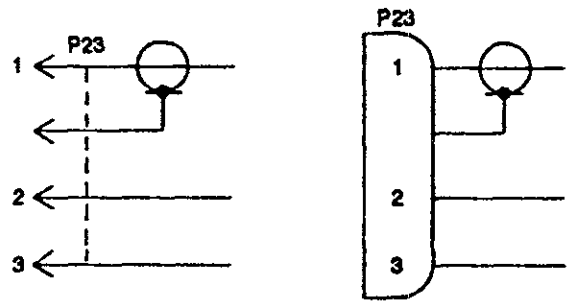

Figure 9-42. Coaxial Cable and Connector - Complete Representation

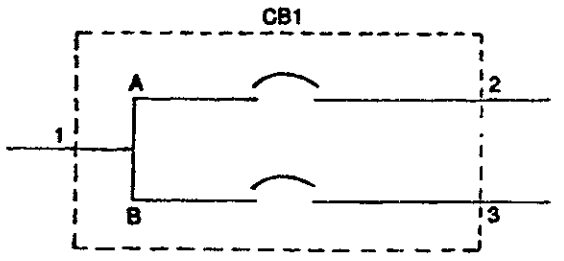

Figure 9-43. Identification of Integral Elements by Suffix Letters

ab. Terminal symbols may be omitted unless required for clarification.

ac. Explanatory information in the form of notes that describe sequence of operations or the dependence of a circuit upon other actions may be located adjacent to the related device, schematic delineations, or with the notes of the drawing.

9.5.6 CONNECTION DIAGRAM.

9.5.6.1 Definition. A connection diagram shows the physical arrangement and electrical connections of a unit or of its component devices or parts. The diagram may cover internal or external connections, or both, and contains such detail as necessary to make or trace the connections. An interconnection diagram, a form of a connection diagram, shows the external wiring connections between different units of one piece of equipment or different pieces of equipment in a system.

A connection diagram is used as a guide to install wire or cable. It is used for circuit tracing but not for circuit analysis. A connection diagram is also used to:

a. Furnish information showing electrical connections for an installation in diagram form

b. Indicate adequacy of electrical connections

c. Facilitate maintenance of equipment

d. Supplement schematic and single-line diagrams by relating circuit information with the actual wiring and relative location of items

A connection diagram is classified as either a line or lineless type. The line type classification includes two subtypes: the point-to-point and the cable or highway type. The point-to-point type diagram (figure 9-44) is used for a few connections. The cable or highway type (figure 9-45) and the lineless type (figure 9-46) are used for complex connection diagrams.

9.5.6.2 General Requirements. The following general requirements are common to all types and subtypes of connection diagrams. These requirements shall apply when preparing a connection diagram.

a. The physical arrangement of device terminals and terminal connections is shown pictorially.

b. Connections shall be listed or lines and symbols required to represent wire, cable, and circuit items and their connections within a defined area shall be shown.

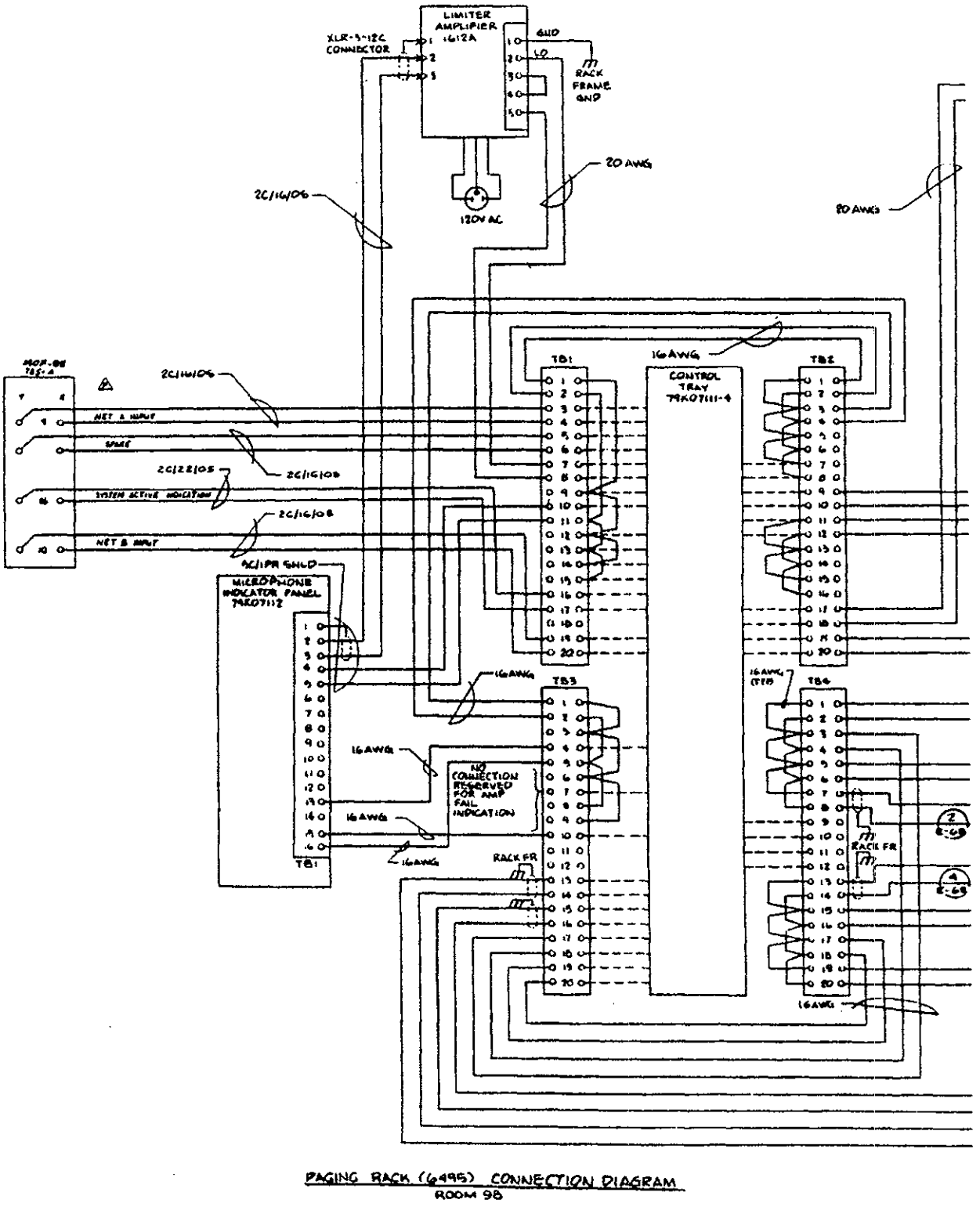

PAGING RACK (6495) CONNECTION DIAGRAM
ROOM 98

Figure 9-44. Typical Point-to-Point Line-Type Connection Diagram

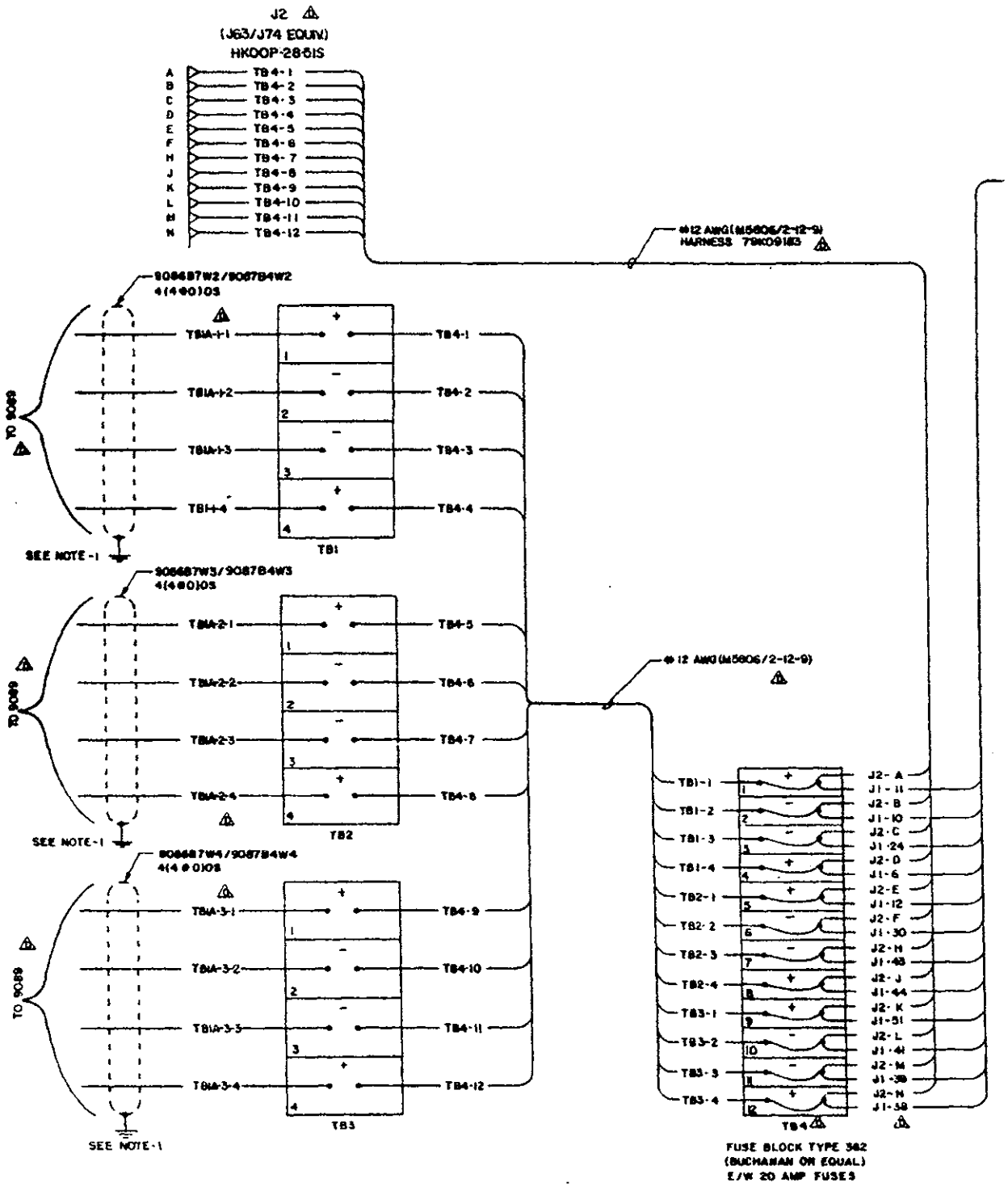

Figure 9-45. Typical Highway Line-Type Connection Diagram

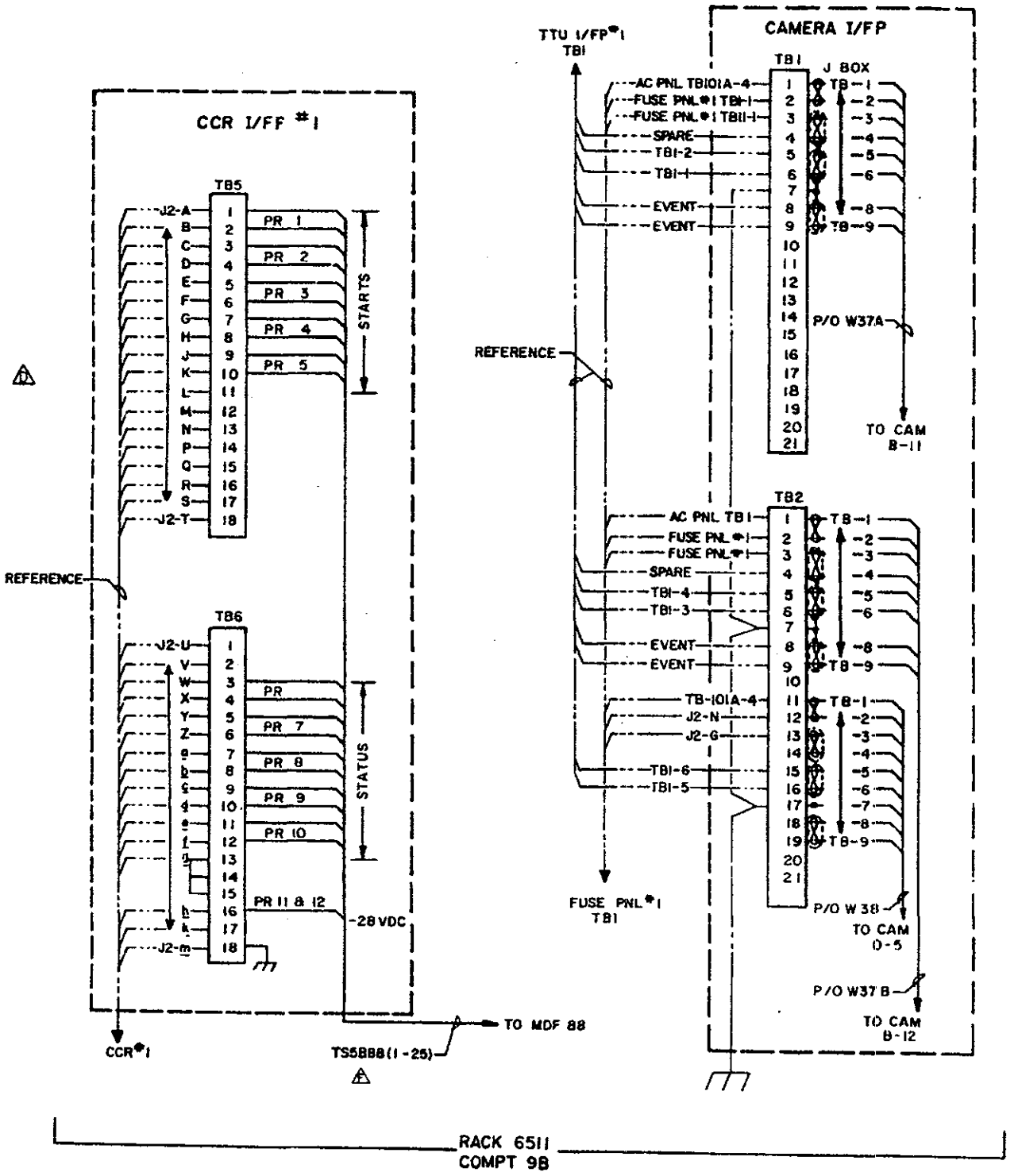

Figure 9-46. Lineless-Type Diagram

c. Point-to-point wire or cable types connection information, and specific terminal identifications shall be shown.

d. Where feasible, system items shall be represented by rectangles or circles. Other geometric shapes that approximate the outline of the items and are simple in form may be used. These shapes shall be the same approximate size. These shapes may indicate portions of their internal circuits, e.g., fuses, circuit-breakers, switches, etc., in single-line or schematic form where more rapid understanding of the drawing will result.

e. Terminations on items shall be represented by attached lines, rectangles, or circles and identified by letters, numbers, pigtail colors, or other nomenclature, unique to the diagram. This identification shall agree with actual marking on the item, when possible, and shall be compatible with other mentions of the same item within the set of drawings. If there is no exiting identification for a termination, one shall be established and views notes, or other means shall indicate the physical configuration of the termination.

f. Item symbols shall be identified by the functional designations or other nomenclature assigned to them on single-line or schematic diagrams.

g. Rating and circuit-function information indicated on single-line or schematic diagrams shall not be duplicated on connection diagrams. However, polarities and phase indications shall be included.

h. The designations "direct wiring" (DIR) and "surface wiring" (SUR) apply to wiring that is not a part of a cable assembly or wiring harness but runs from terminal to terminal according to the following:

   (1) DIR - Wires run directly from terminal to terminal with a minimum of slack.

   (2) SUR - Wires run from terminal to terminal in the most convenient manner.

   If these wires must be differentiated from wires in a cable assembly, they shall be identified by DIR or SUR.

i. The term "pigtail lead" refers to leads that are furnished with the item. Pigtail leads on the line-type connection diagram shall be identified by PGT to differentiate them from wires to be installed in the facility.

j. When splices or multiple wire terminations are required, the splicing or termination method shall be so indicated on the applicable drawing.

k. Correct phasing must be indicated to avoid possible damage to equipment by improper connections. The diagram shall indicate wires grouped in conduit as well as identifying wires and conduit.

l. Prewired connections are those made by the equipment or item manufacturer and may be indicated by any of the following ways:

(1) Dashed lines, inside or outside the item symbol outline, indicate connections from terminal to terminal.

(2) Solid lines are shown within the item symbol outline.

(3) Drawing notes directed to the connecting line, with a leader line indicating that the connection is prewired.

Method (1) or (2) should be supplemented by a drawing not defining the line.

Solid lines outside of the symbol outline indicate connections to be made by the installer.

m. The item symbols may be arranged in simple diagrammatic form. They may also be arranged to indicate their actual physical relationship with each other. If wire or cable routing information is included, the related positions of the items must approximate those that will actually exist in the facility.

n. Notes may include information on:

(1) Functional and reference-designation explanations

(2) Soldering procedures

(3) Wiring abbreviations, codes, or symbols that need to be explained

(4) Wires that are included in, or excluded from, cable assemblies

(5) Gage and types of wire

(6) Any additional wiring information or instructions

o. If microwave circuitry is included in a connection diagram, it shall be shown in single-line form.

9.5.6.2.1 Requirements for Line-Type Connection Diagrams. The following requirements shall apply when preparing line-type connection diagrams:

a. Continuous lines shall represent conductors between the terminals of one item and the terminals of another. The lines shall be horizontal or vertical wherever possible and as direct as practical. Double crossovers shall be avoided. (See figure 9-47.)

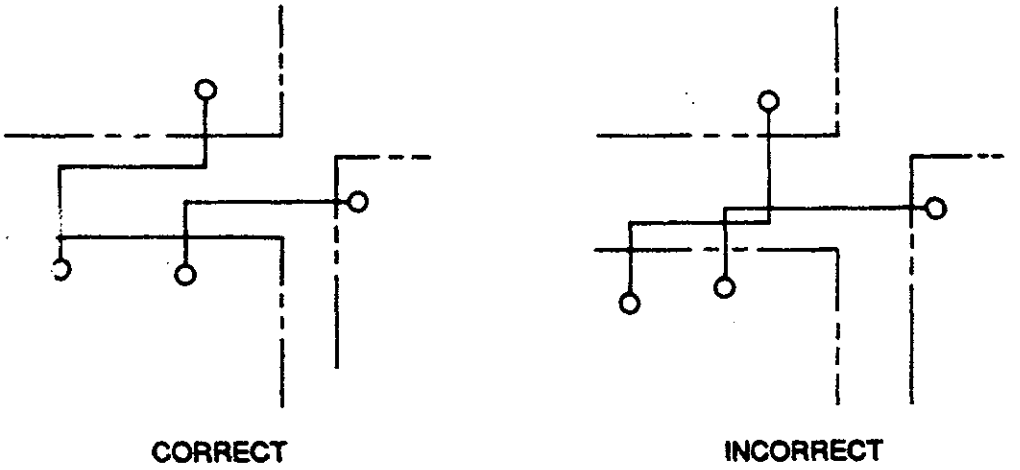

Figure 9-47. Connection Lines Between Components

b. Wires sizes shall be indicated in terms of American Wire Gage (AWG) numbers. Insulation and cable composition shall be defined by the drawing note, which may call for the applicable specification or National Electrical Code (NEC) designation.

The application of this information to specific wires and cables may be done through leader lines, direct-line application (No. 10 AWG/THHN) or by code (22NCCB) established in or defined by the notes. When a number of wires are the same size, it is recommended that a general note such as the following be included.

ALL WIRES SHALL BE NO. 12 AWG/THHN UNLESS OTHERWISE SHOWN.

c. Wire colors shall be indicated except for wires that are part of cable-assembly information included on another drawing or specification. Wire colors shall be indicated by showing either abbreviations, numerical codes, or letter color codes. Indication of color abbreviations is preferable when many colors or color combinations are to be shown. When numerical or letter color codes are used, avoid confusion with other numerical references. Numerical and letter codes shall be defined

on drawings on which they appear. Numerical and letter codes shall be used only on connection diagrams and wire lists.

When a single color is used to identify a lead, a solid color or a white base color with a single broad tracer representing the identifying color may be used. A tracer is defined as a strip of contrasting color superimposed upon or integral with the visible insulation or covering of the wire.

When additional colors are necessary to identify particular leads, a solid color may be used to identify the body color of wires with braided outer covering, with tracers to identify the particular lead. In all wiring, a white base with a broad tracer to identify the body color may be used, with additional tracers of a narrower width to identify a particular lead. When white is the identifying body color, a broad tracer should not be used.

Examples of wire color codes:

Color	Abbreviation	Numerical Code	Letter
Black	BLK	0	K
Brown	BRN	1	N
Red	RED	2	R
Orange	ORN	3	O
Yellow	YEL	4	Y
Green	GRN	5	G
Blue	BLU	6	B
Violet (Purple)	VIO(PR)	7	V(P)
Gray (Slate)	GRY(SL)	8	A(S)
White	WHT	9	W

Color designations should be shown above the line to which they belong. Wire color designations shall be placed at both ends of a connecting line except that a single indication is sufficient for short connections.

d. The highway line-type connection diagram is basically the same as the point-to-point line-type diagram except that groups of interitem connecting lines are merged into paths called highways instead of being shown as individual lines. (See figure 9-48.)

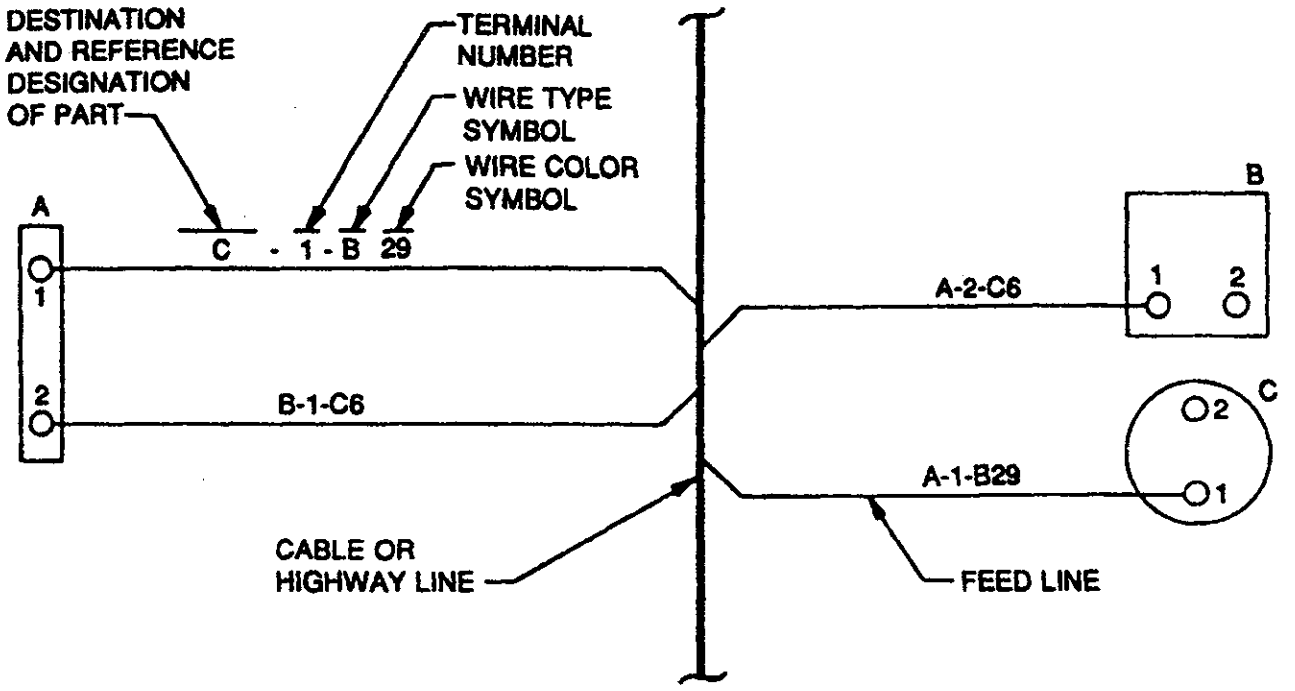

Figure 9-48. Method of Indicating Feed Lines on a Highway Connection Diagram

(1) Short lines or feed lines are drawn perpendicular from the device or component terminals to the cable or highway line. The junction of the feed line with the highway line shall be indicated with an inclined or curved line. The inclined line indicates the direction of the run joining the cable or highway line.

(2) Crossing of lines shall be avoided. If this is not possible, they should cross at a 90° angle.

(3) Wire data on feed lines shall include wire destination, color, and type. This information should be shown above the feed line (figure 9-48), but the data may also be shown, for space-saving reasons, within the feed line.

(4) The component destination of a feed-line may be shown by indicating the component function or by some other designation with the terminal number of the component. Another permissible destination indication consists of having numbers at feed-line points of entry and exit from the cable or highway line.

(5) Wires which must be electrically segregated from other wires, or which are otherwise critical, shall be shown separately or run directly from terminal to terminal.

e. More than one cable or highway line may be used to indicate wire runs or grouping of wires into cable or harness assemblies. A drawing note, with the aid of a symbol if necessary, shall identify the highways as being part of the same or different cable assemblies. Highway lines may be bold in width to indicate that they include more than one wire. However, no more than two line widths shall be used on the connection-diagram lines.

f. Wiring delineation may be simplified by eliminating all lines representing wiring and listing the terminal connection data in tabular form adjacent to the wiring view. The terminal connections need not be listed in numerical or alphabetical order. (See figure 9-49.)

g. Wire groupings may be shown as an interrupted line and identified with a symbol. The destination grouping can then be identified with the same symbol and letters or numbers. (See figure 9-50.)

9.5.6.2.2 Requirements for Lineless - Type Connection Diagrams. The following requirements shall apply when preparing lineless-type connection diagrams:

a. Continuous connecting lines between items are omitted. Short spur lines from connectors, terminals, terminal boards, etc., shall be used in conjunction with item and item-terminal designations to convey the connection information.

b. Destinations shall be indicated in terms of designators or other nomenclature established on the single-line and schematic diagrams and referred to in or near item symbols on the connection diagram. These designations shall be followed by dash numbers or letters to indicate to which terminal, connector, pigtail, lead, etc., they are to be connected. (See figure 9-51.) If the item-description nomenclature is too long, it may be abbreviated in accordance with the requirements of section II.

c. The wire size and type shall be specified at one end of each wire or cable and shall be placed above one of the spur lines, unless they can be better indicated by note. (See figure 9-52.)

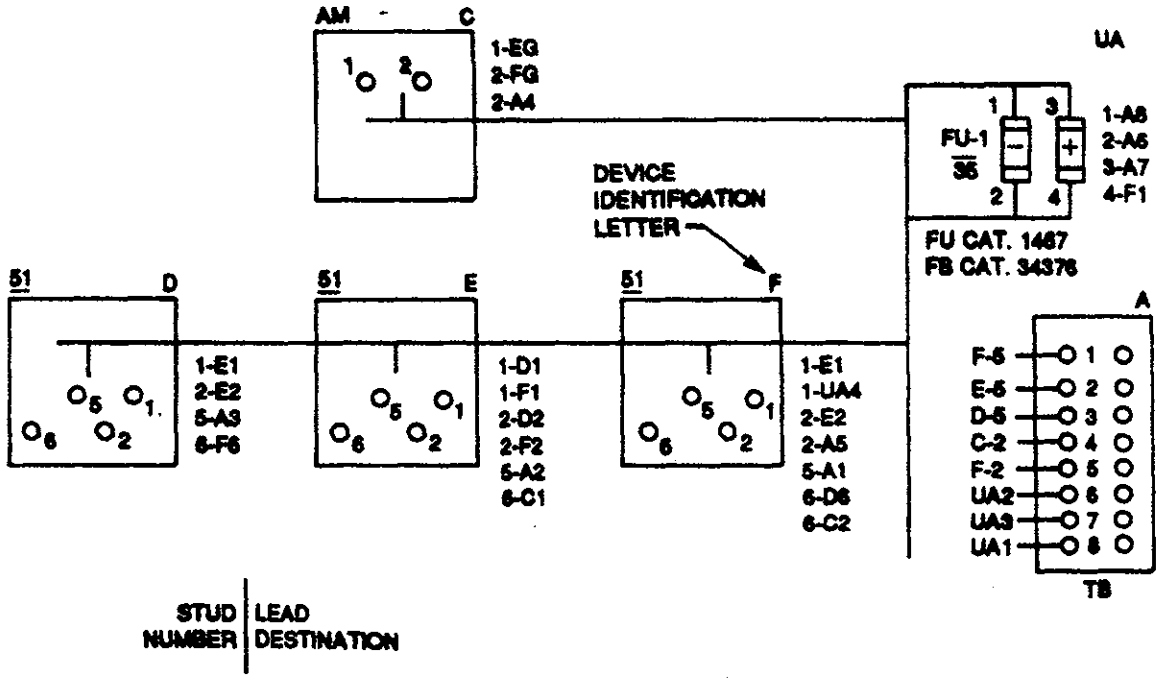

Figure 9-49. Simplified Wiring Delineation

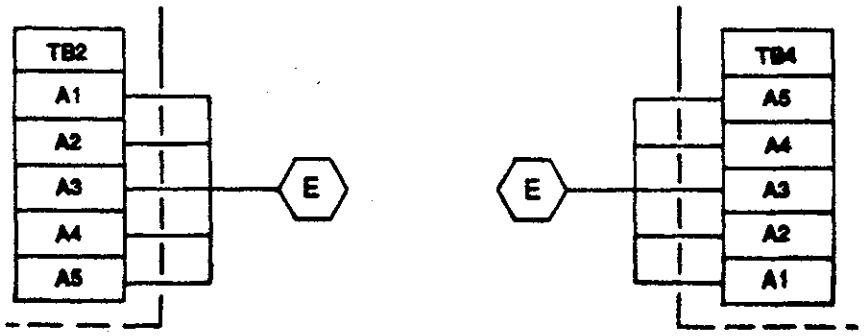

Figure 9-50. Interrupted Line Identification

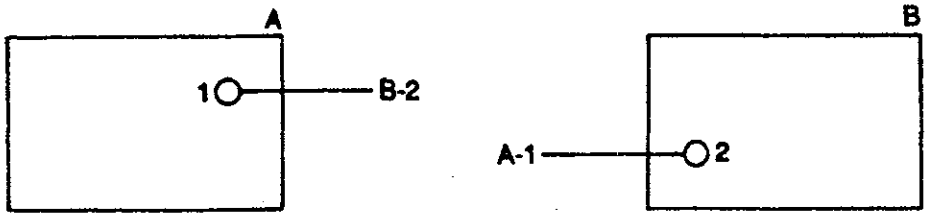

Figure 9-51. Destinations Using Designations and Dash Numbers for Terminal Identification

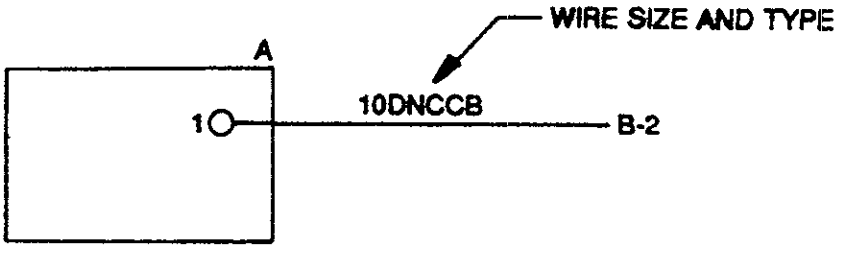

Figure 9-52. Location of Wire Size and Type Identification

d. The color code, in the terms specified in 9.5.6.2.1c, shall be shown at one end of each wire, and shall be placed above the spur line unless it may be better indicated by a note. (See figure 9-53.)

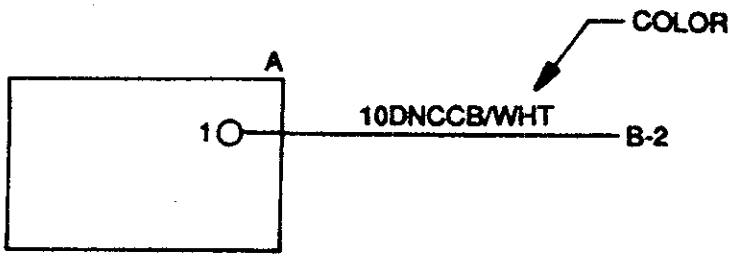

Figure 9-53. Indication of Wire Color

e. If the mating wire between item connections has an item name, it shall be labeled PGT (pigtail). In such case, the wire size and type may be omitted.

f. Wire numbers may be assigned in lieu of the destination information specified in 9.5.6.2.2b. When wire numbers are used, they shall be assigned consecutively, beginning with the number one.

g. If the drawing is large and complex, use drawing zones to locate various elements referred to by the destinations. The zoning, when used, shall be included in brackets after the designation. (See figure 9-54.)

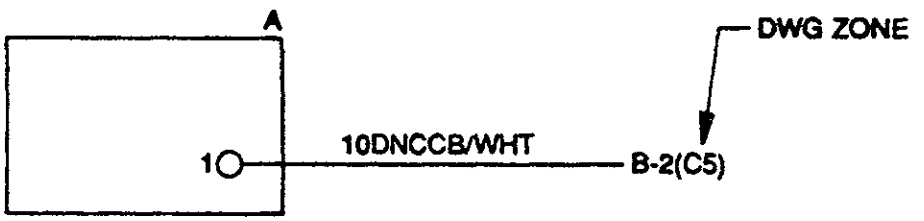

Figure 9-54. Use of Zone Orientation.

h. The spur or interrupted line is normally made directly to the terminal of the item. However, when a space problem exists, all spurs of a particular item may be tabulated elsewhere on the drawing. On complex drawings, such tabulations shall be cross-referenced to the drawing zone of the item.

i. Wire list lineless-type connection diagrams are best suited for complex installations. They consist of a separate list on which "from" and "to" wire and cable terminations or connections are listed, together with wire size, type, color, and other associated information. The wire list does not require the support of a special drawing, providing terminal and item identities are included and labeled on the drawings. If the drawings do not provide this information, a connection orientation diagram consisting of symbols (rectangles and circles), symbol labels, and terminal labels shall be made. In either case, the wire list and the diagrams or plans shall cross-reference each other. The list shall be arranged in the order in which the connections are most likely to be made. The following information shall be included.

(1) Each wire shall be listed once and numbered consecutively according to its arrangement.

CABLE NO.	CABLE TYPE	FROM							TO							LENGTH OF CABLE TYPE	REMARKS
			COMMUNICATIONS TERMINAL CABINET NO.	TERMINAL BLOCK TYPE	TERMINAL TYPE	SHIELD TERMINAL TYPE	CABLE CONNECTOR SEE NOTE 3	TERMINATION DETAIL NO.	BUILDING	COMMUNICATIONS TERMINAL CABINET NO.	TERMINAL BLOCK TYPE	TERMINAL TYPE	SHIELD TERMINAL TYPE	CABLE CONNECTOR SEE NOTE 3	TERMINATION DETAIL NO.		
1001	60/SCS/18	A.G.C.S. BASEMENT	4A	TB-5	T-1	—	—	6	BLOCKHOUSE	1 (EXIST)	TB-9 (EXIST)	T-2	—	—	6		
1002	40/TPSJ/18	A.G.C.S. BASEMENT	4A	TB-5	T-1	ST-5	—	9	BLOCKHOUSE	1 (EXIST)	TB-9 (EXIST)	T-2	ST-5	—	5		
1003	40/TPSJ/20	A.G.C.S. BASEMENT	4A	TB-5	T-1	ST-4	—	9	BLOCKHOUSE	1 (EXIST)	TB-9 (EXIST)	T-2	ST-9	—	5		
1004 1005																	WAS NOT USED
1006	60/TSPJ/20	A.G.C.S. BASEMENT	4A	TB-5	T-1	ST-4	—	9	A.G.C.S. 1ST FL	9A	TB-9	T-2	ST-9	—	5		

NOTES:

1. COIL 20' OF ALL CABLES TYPE "TV-1" IN BLOCKHOUSE COMMUNICATIONS ROOM, 1ST FLOOR BEHIND LOCATION OF COMMUNICATION RACKS.

2. CABLES WITH NUMBERS 1111, 1112, 1113, 1117 THRU 1121, AND 1121A SHALL BE COILED ON THE FLOOR IN ACONTINUOUS 20-FT COIL. THERE SHALL BE NO SPLICES IN ANY TYPE "TV-1" CABLE.

3. ALL CONNECTORS FOR "TV-1" CABLES SHALL BE 45-3100E-24-28S. ALSO SEE TERMINATION DETAILS DWG. NO _____

Figure 9-55. Typical "From-To" Cable Connection Diagram Listing

(2) The color, size, and type of wire or cable shall be included.

(3) Solder, terminals, sleeving, wire markers, tape, and lacing shall be indicated and their specific applications given.

(4) "From" and "to" destinations shall be specified in terms supported by labeling on the drawing or connection-symbol orientation diagram, notes on the wire list, or a combination of these.

Although the amount and type of information in tabular form may vary in detail and extent, "from" information (origin of wire or cable run) and "to" information (termination of wire or cable) shall be included. (See figure 9-55.) "From" and "to" information should locate terminals or connectors by major division, subdivision, and element. The element should be identified by name, nomenclature, or code. Examples of major divisions are: major units, rooms, and bays. Examples of subdivisions are: switch-gear, consoles, and panels. Examples of elements are: terminal boards, connectors, switches, light fixtures, and transformers. Terminals within these items should be designated by reference or function designation, number, letter, color, etc.

"Routing" or "via" information may include paths, significant location, holes, raceways, cable identification, etc. The referenced cable route should be shown on the electrical plan or connection-symbol orientation drawing. Table 9-1 shows the information required for a wire list.

(5) The notes shall include definitions of codes used in the listing, reference to the specifications, material application, etc.

9.6 ELECTRICAL PLANS

9.6.1 DEFINITION. Electrical plans consist of scaled delineations and line symbology arranged to depict circuits and electrical-equipment installation. The following types of plans are included:

a. Electrical-equipment arrangement

b. Building load-center substation

c. Building or structure electrical-power distribution

d. Exterior electrical-power distribution

e. Building or structure lighting (interior)

Table 9-1. Information Required for a Wire List

Item	Description
Wire or cable number	Sequence number in order of installation.
Wire or cable type	Indicated by AWG size and defined (note on sheet 1) by code or cable-function designation.
Wire color	Wire colors are indicated by abbreviations, numerical color codes, or single letter designations. Will not be applicable (unless indicated by note) when cable assemblies with connectors on each end are used to make the connection.
Sleeve or marker	Code numers or letters defined in sheet-1 notes, applicable to the point of origin.
From area	Area of wire or cable origin (room, building, bay, etc.) defined on plain or connection-orientation diagram.
From origin point	Actual terminal identification within an item or equipment. In the case of cables, this may be a connector identification.
To termination point	Actual point of wire or cable termination within an item or equipment. In the case of cables, this may be a connector identification.
To area	Area of wire or cable termination (room, building, bay, etc.) defined on plan or connection-orientation diagram.
Sleeve or marker	Code number or letters defined in sheet-1 notes, applicable to point of termination.
Remarks	Route of wire or cable in terms of code numbers for raceways, conduits, etc. Also, twisting or other special treatment.

f. Exterior lighting

g. Building or structure grounding (interior)

h. Exterior grounding

i. Cathodic protection

j. Building or structure communications (interior)

k. Exterior communications

l. Fire detection and alarm system

Diagrams and the construction specification supplement the plans.

9.6.2 GENERAL REQUIREMENTS. The following general requirements are common to all types of electrical plans and shall be followed when preparing electrical plans:

a. Electrical symbols used shall be in accordance with KSC-STD-152-1. Electrical items such as wire, conduit, cable, electrical equipment, etc., shall be delineated by line work that is distinguishable from line work used to depict items shown for reference or orientation.

b. Lines between boxes on power- and lighting-circuit plans shall indicate cable, conduit, duct, and wire runs. Separate lines for wires within these carriers are generally not shown except by symbol.

c. Conduit runs shall be indicated by straight lines parallel to walls, floors, ceilings, etc. Wire and cable runs shall be depicted by curved lines. When these lines are used without additional qualification, they indicate the most direct, noninterfering route. When a specific routing of conduit, wire, and cable runs is required, the routing of these runs shall be dimensioned, or covered by note, or both. In any event, conduit runs should be dimensionally located when three or more conduits are in one bank or when the conduit is 75 millimeters (3 inches) in diameter or larger.

d. Requirements for marking electrical safety or warning notices on equipment, doors, enclosures, etc., not otherwise provided for in the construction specification, shall be included on the drawings.

e. When space is specifically set aside for future installation of equipment such as a transformer, such space shall be indicated in dashed lines and labeled.

f. Spare wires, cables, conduit, terminals, circuit breakers, etc., shall be shown and identified as spares.

g. Applicable drawings shall be referenced.

h. The use of arrowheads on wire, cable, or conduit lines shall be limited to the indication of HOME RUNS (home runs are those returning, without interruption, to the local distribution box).

i. The completeness of the drawings shall be such that additional drawings need not be made in the field to interpret the design.

   The drawings shall permit the development and analysis of applicable vendor information drawings.

j. Unless included in the construction specification, the following items shall appear on the drawings:

   (1) Extent of utilization of Underwriter Laboratories' (UL) approved items.

   (2) Compliance, as applicable, to the National Electrical Code, KSC-E-166, and other KSC documents.

   (3) Marking or tagging requirements, i.e., UL labels, date of wire manufacture, wire sizes, fuse ratings, etc.

   (4) Extent of field routing and determination of points of support for switch-board-panel connecting wires.

k. The plans shall be drawn so that balanced-load conditions can be checked.

l. Special requirements:

   (1) Number, size, and location of expansion joints.

   (2) Construction details, such as when a conduit passes from a floating floor to a rigid structure.

   (3) Termination details of conduit, such as details of conduit that passes from one ventilation zone to another.

   (4) Other more general information, such as that pertaining to blank sections, hangers, tees, elbows, junction boxes, etc., not included in the construction specification.

m. More than one plan view of the same area may be required to show different electrical systems. (e.g., communications on one, power on another, and lighting on another). The plan view(s) shall be supplemented by sections, elevations, and details where necessary.

n. Details expand the information provided on the basic plan or elevation. (Consideration should be given to providing a standard drawing for details that are repetitive.)

o. Devices with different energized and deenergized appearances shall be shown in the deenergized condition.

p. Except for plot plans, scales 5 mm = 500 mm (1/8" = 1' 0") and larger shall be used.

q. Conduit and cable requirements may be shown on a conduit and cable schedule or may be included in the panel schedule.

Conduits and cables listed in the schedule are grouped under functional service headings and assigned an identification, such as P35 which indicates circuit 35 in Building P. The conduit and cable schedule also records the "FROM" and "TO" of the circuit. (See figure 9-56.)

In facilities with a multiplicity of systems, a conduit and cable schedule may be supplemented by a wire list to provide a tabular description of connections and runs required. (See figure 9-57.)

r. Circuit schedules shall be included for each lighting panel (figure 9-58) and power panel (figure 9-59). Lighting fixture schedules will be included where needed to supplement lighting plans.

s. Common requirements for plot plans are listed below.

(1) The plot plans tie together the electrical-system requirements for each building into the overall electrical system for the site or complex. They generally show large site areas involving several facilities.

(2) Electrical equipment shall be located by coordinates, stations, or reference to column lines of a building or structure.

(3) Reference to applicable drawings shall be made.

(4) The interface with the building structure shall be shown.

(5) All known interferences or topographical details influencing the construction of the electrical installation shall be shown.

WIRE AND CONDUIT SCHEDULE								
CND NO.	CND SIZE	NO. OF WIRES	SIZE OF WIRE	TYPE OF WIRE	FROM	VIA	TO	REMARKS

Figure 9-56. Typical Wire and Conduit Schedule

WIRE RUN NO.	NO. OF WIRES	SIZE OF WIRE	TYPE OF WIRE	FROM	VIA	TO	WIRE NUMBERS	REMARKS
1	6	4/0	RH	MAIN SWGR	P2 J.B. P113	MCC #1		
2	5	12		STARTER MCC	TRAY A, A1, B	TERM CAB #7	KA-1A KA-G BK-K1	

Figure 9-57. Typical Tabular Description

PANEL L-D21 SERVICE 480Y/277V,3PH,4W+G FEEDER MDPD2-3
TYPE NEHB-30 I.C. 22,000 Amps MTG. SURFACE MAINS 125A M.L.O.

BRANCH CIRCUIT						S/N	BRANCH CIRCUIT				
CKT.	LOAD DESCRIPTION	LOAD (AMPS) ØA	ØB	ØC	BKR.	ØA ØB ØC	BKR.	LOAD (AMPS) ØA	ØB	ØC	LOAD DESCRIPTION	CKT.
1	SPACE	–			–		–	–			SPACE	2
3			–		–		–		–			4
5				–	–		–			–		6
7		–			–		–	–				8
9			–		–		–		–			10
11				–	–		–			–		12
13		–			–		–	–				14
15			–		–		–		–			16
17				–	–		–			–		18
19		–			–		–	–				20
21			–		–		–		–			22
23				–	–		–			–		24
25		–			–		–	–				26
27			–		–		–		–			28
29				–	–		–			–		30
31												32
33												34
35												36
37												38
39												40
41												42
		–	–	–		SUB-TOTALS		–	–	–		

LOADS ØA – (AMPS) ØB – (AMPS) ØC – (AMPS) TOTAL – KVA

PANEL L-D22 SERVICE 480Y/277V,3PH,4W+G FEEDER MDPD2-4
TYPE NEHB-42 I.C. 22,000 Amps MTG. SURFACE MAINS 225A M.L.O.

BRANCH CIRCUIT						S/N	BRANCH CIRCUIT				
CKT.	LOAD DESCRIPTION	LOAD (AMPS) ØA	ØB	ØC	BKR.	ØA ØB ØC	BKR.	LOAD (AMPS) ØA	ØB	ØC	LOAD DESCRIPTION	CKT.
1	NIGHT LIGHTS & EXIT SIGNS	9			20		20	15			LTG.-CASHIER AREA	2
3	LTG.-KITCHEN, HALL, RESTROOMS		12		20		20		15		LTG.-DINING AREA	4
5				13	20		20			14		6
7	SPARE	–			20		20	13			UP LTG. DINING AREA	8
9			–		20		20		13			10
11				–	20		20			13		12
13		–			20		20	13				14
15			–		20		20		–		SPARE	16
17				–	20		20			–	SPARE	18
19	SPACE	–			–		–	–			SPACE	20
21			–		–		–		–			22
23				–	–		–			–		24
25		–			–		–	–				26
27			–		–		–		–			28
29				–	–		–			–		30
31		–			–		–	–				32
33			–		–		–		–			34
35				–	–		–			–		36
37		–			–		–	–				38
39			–		–		–		–			40
41				–	–		20			10	LTG. CONTACTOR "L"	42
		9	12	13		SUB-TOTALS		41	28	37		

LOADS ØA 50 (AMPS) ØB 40 (AMPS) ØC 50 (AMPS) TOTAL 42 KVA

Figure 9-58. Typical Lighting Panel Schedules

PANEL P-B74 SERVICE 208Y/120V,3PH,4W+G FEEDER MDPB7-4
TYPE NQOD-42 I.C. 22,000 Amps MTG. FLUSH MAINS 225A M.B.

CKT.	LOAD DESCRIPTION	LOAD (AMPS) ØA	ØB	ØC	BKR.	S/N ØA ØB ØC	BKR.	LOAD (AMPS) ØA	ØB	ØC	LOAD DESCRIPTION	CKT.
1	RECEPT – NORTH WALL MEZZ	9			20		20	9			RECEPT – CUBICLES COL. N	2
3			9		20		20		9			4
5				9	20		20			9		6
7		9			20		20	9			RECEPT – CUBICLES COL. M	8
9			9		20		20		9			10
11				9	20		20			9		12
13	RECEPT – CUBICLES COL. N-21	9			20		20	9			RECEPT – CUBICLES N-17/18	14
15			9		20		20		9			16
17				9	20		20			9		18
19		9			20		20	9				20
21			9		20		20		9			22
23				9	20		20			9		24
25	F/A SUB-PANEL "E"	4			20		20	–			SPARE	26
27			4		20		20		–			28
29	LIGHTING – MEZZ. RESTROOMS			4	20		20			–		30
31	SPARE	–			20		–	–			SPACE	32
33			–		20		–		–			34
35				–	20		–			–		36
37	SPACE	–			–		125	27			PANEL P-B74/1	38
39			–		–		–		27			40
41				–	–		–			28		42
		40	40	40		SUB-TOTALS		63	63	62		

(3) (2) (3)
LOADS ØA 103/52 (AMPS) ØB 103/52 (AMPS) ØC 102/51 (AMPS) TOTAL 37/19 KVA

PANEL P-B74/1 SERVICE 208Y/120V,3PH,4W+G FEEDER PB74-38(40,42)
TYPE NQOD-30 I.C. 22,000 Amps MTG. FLUSH MAINS 125A M.L.O.

CKT.	LOAD DESCRIPTION	LOAD (AMPS) ØA	ØB	ØC	BKR.	S/N ØA ØB ØC	BKR.	LOAD (AMPS) ØA	ØB	ØC	LOAD DESCRIPTION	CKT.
1	RECEPT – CONF RM/CUBICLES	9			20		20	9			RECEP –CUB'LS N.WALL/COL.18	2
3	(MEZZ.)		9		20		20		9		(MEZZ.)	4
5				8	20		20			9		6
7	SPARE	–			20		20	9				8
9			–		20		20		9			10
11				–	20		20			9		12
13		–			20		20	–			SPARE	14
15			–		20		20		–			16
17				–	20		20			–		18
19	SPACE	–			–		–	–			SPACE	20
21			–		–		–		–			22
23				–	–		–			–		24
25		–			–		–	–				26
27			–		–		–		–			28
29				–	–		–			–		30
31												32
33												34
35												36
37												38
39												40
41												42
		9	9	8		SUB-TOTALS		18	18	18		

(3) (2) (3)
LOADS ØA 27/19 (AMPS) ØB 27/19 (AMPS) ØC 26/18 (AMPS) TOTAL 10/5 KVA

Figure 9-59. Typical Power Panel Schedules

(6) When exact routing or location is not feasible or necessary, a notation such as FIELD RUN or LOCATE IN FIELD may be stated.

9.6.3 ELECTRICAL-EQUIPMENT ARRANGEMENT.

9.6.3.1 Definition. An electrical-equipment arrangement plan shows the general configuration of the electrical equipment and attaching hardware, the location, positioning, and mounting information.

9.6.3.2 Requirements. The following requirements shall apply when preparing an equipment-arrangement plan:

a. The equipment-arrangement plan shall clearly show the proper top-to-bottom and front-to-back positioning. Plan views shall be oriented similar to the architectural plan views, if feasible.

b. Surrounding equipment and areas shall be identified. Door swings, clear areas required for placement of parts, etc., shall be shown as necessary.

c. Equipment shall be dimensionally located from column lines, walls, ceilings, etc.

d. Equipment shall be identified by notes or in a parts list.

e. Reference to applicable drawings shall be made.

9.6.4 BUILDING LOAD-CENTER SUBSTATION.

9.6.4.1 Definition. A building load-center substation plan depicts electrical equipment whose purpose is to modify or switch electrical power. (See figure 9-60.) (Equipment for generation or utilization of electric energy is not considered within the scope of a building load-center substation.) Since power is received at the primary distribution voltage and retransmitted through feeder circuits at secondary distribution voltages, substations usually have transformers in addition to the secondary switchgear.

9.6.4.2 Requirements. The following requirements shall apply when preparing a building load-center substation plan:

a. The single-line diagram, the details, and the arrangement shall be included on one drawing if space permits.

b. Circuit making and breaking elements such as switches, breakers, fuses, etc., shall be identified and located even though they are part of separately manufactured equipment.

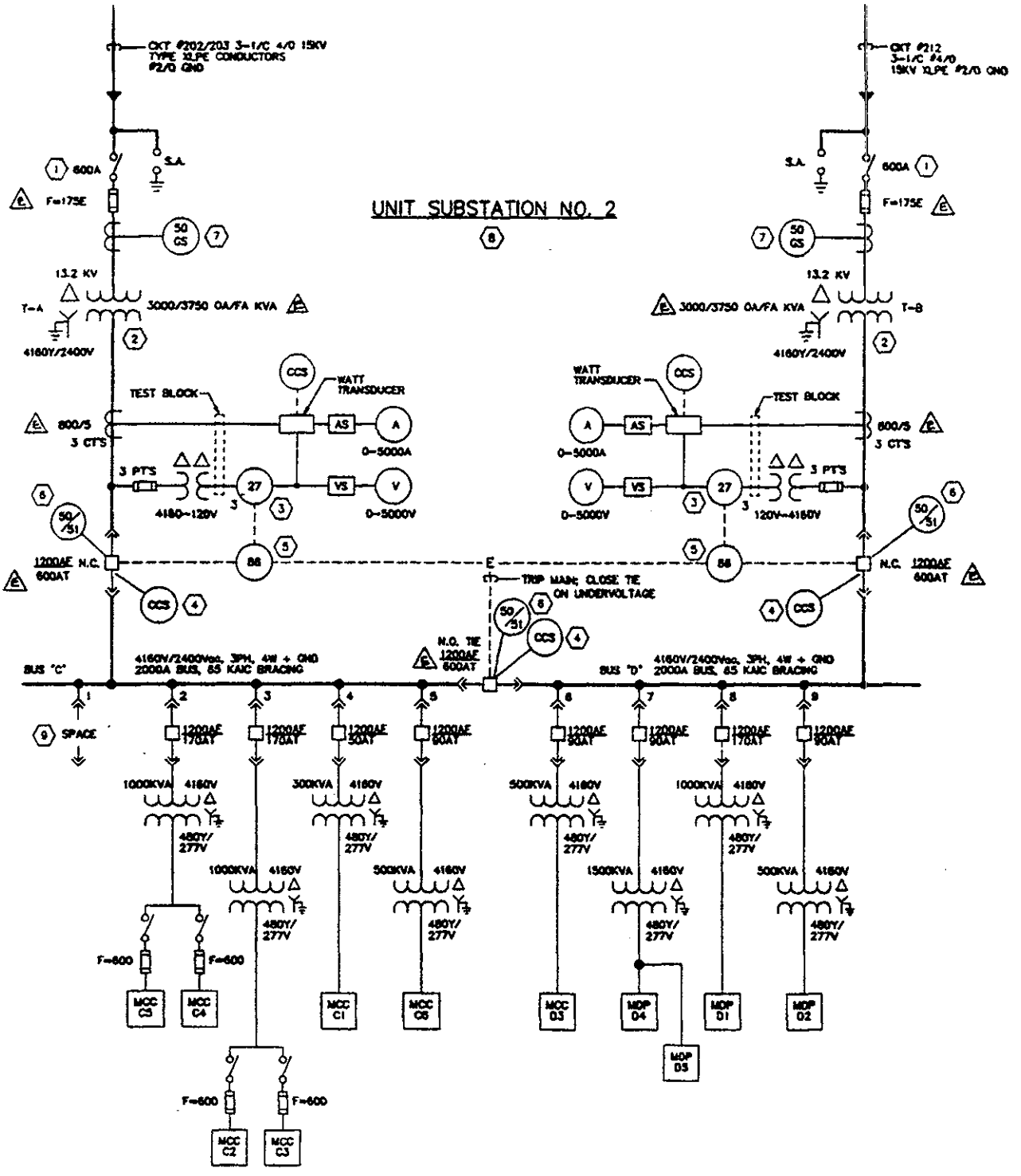

Figure 9-60. Electrical Substation

c. The following items should be shown and identified as required:

(1) Mechanical and structural details

(2) Electrical equipment and its interconnections

(3) Excavation, site preparation, grading, etc.

(4) Protection systems such as lighting, grounding, etc.

(5) Space allocation for operation, removal, and expansion

(6) Safety zones and clearances

9.6.5 BUILDING OR STRUCTURE ELECTRICAL-POWER DISTRIBUTION (INTERIOR).

9.6.5.1 Definition. An interior electrical-power distribution plan depicts primary and secondary power distribution, excluding lighting circuits, within buildings and structures. (See figure 9-61.)

9.6.5.2 Requirements. The following requirements shall apply when preparing a building or structure interior electrical-power distribution plan:

a. The primary supply cables and the secondary feeder cables or bus-ways shall be shown for load-center substations.

b. Secondary-circuit connections to common points and to associated equipment such as panels, transformers, switches, etc., shall be shown.

c. Power panel-board schedules shall be shown, and shall contain the total connected load and the estimated demand load (KVA), including the demand factor.

d. Standby- or emergency-power systems shall be included and identified.

9.6.6 EXTERIOR POWER DISTRIBUTION.

9.6.6.1 Definition. An exterior power-distribution plan depicts power circuits between the site power source and the building or structures being served. (See figure 9-62.)

9.6.6.2 Requirements. The following requirements shall apply when preparing an exterior power-distribution plan:

a. All power distribution outside of or attached to buildings or structures (excluding exterior lighting and substations) shall be shown.

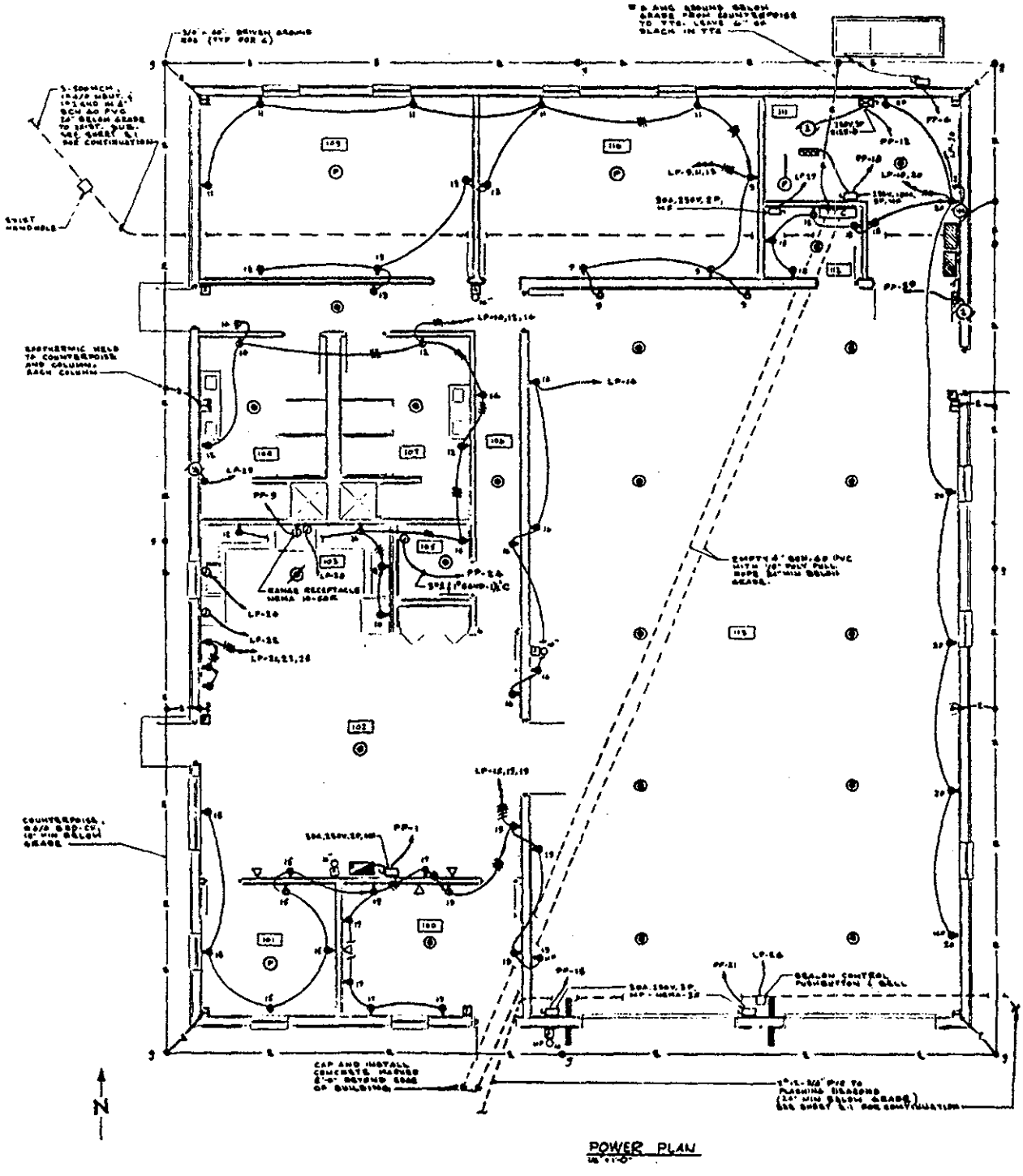

Figure 9-61. Building or Structure Interior Electrical-Power Distribution Plan

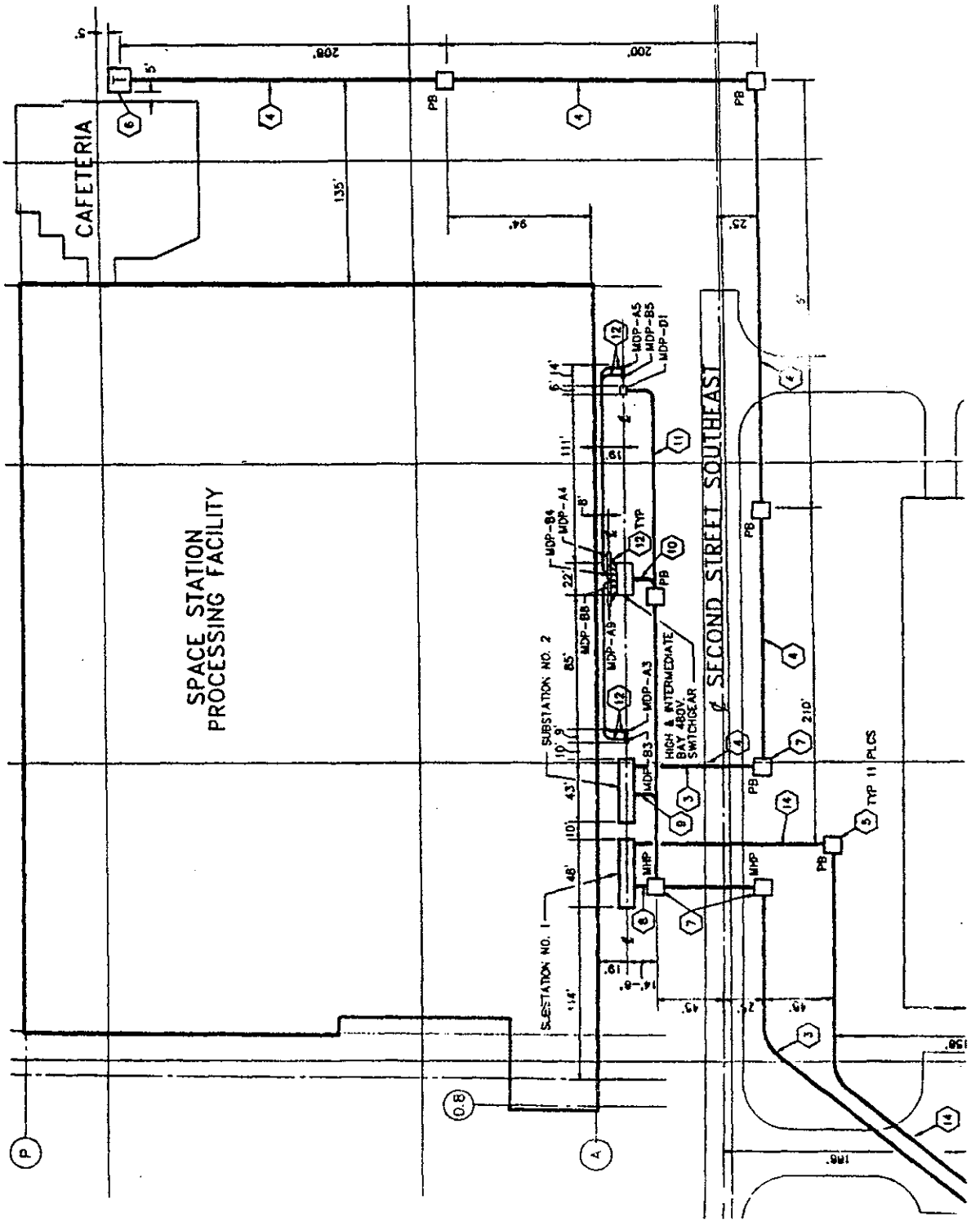

Figure 9-62. Exterior Power Distribution

b. The plan shall be oriented with the site plan.

c. The size and location of pads, footings, piers, etc., shall be shown. The construction details of these items are usually shown on the structural drawings.

d. Main substation plans shall include the incoming lines, terminals, bus structure, protective equipment, disconnects, transformers, secondary switchgear, accessories, etc.

e. Overhead distribution drawings shall include the following:

(1) Location of poles by coordinates, span length, or stations

(2) Pole schedule including pole height and class; generally, poles are numbered and this number is used to tie the pole to the schedule

(3) Location and size of lines, hardware, and equipment

(4) Voltages, indicated by line symbols, notes, or both

(5) Tap-offs, cables, accessories, etc.

f. Underground distribution drawings shall include the following:

(1) The size, arrangement, and location of ducts, duct banks, manholes, etc.

(2) Cable sizes, types, installation data, etc.

(3) Voltages, indicated by line symbols, or notes, or both

(4) Tap-offs, cable accessories, etc.

9.6.7 BUILDING OR STRUCTURE LIGHTING (INTERIOR).

9.6.7.1 Definition. An interior lighting plan shows lighting circuits, fixtures, and accessories within a building or structure. (See figure 9-63.)

A building lighting plan shows the lighting system beginning with the power source at the load-center substation, lighting transformer, or panels and extending to the light fixtures.

9.6.7.2 Requirements. The following requirements shall apply when preparing a building or structure interior lighting plan:

a. Lighting circuits shall be shown separately from other circuits.

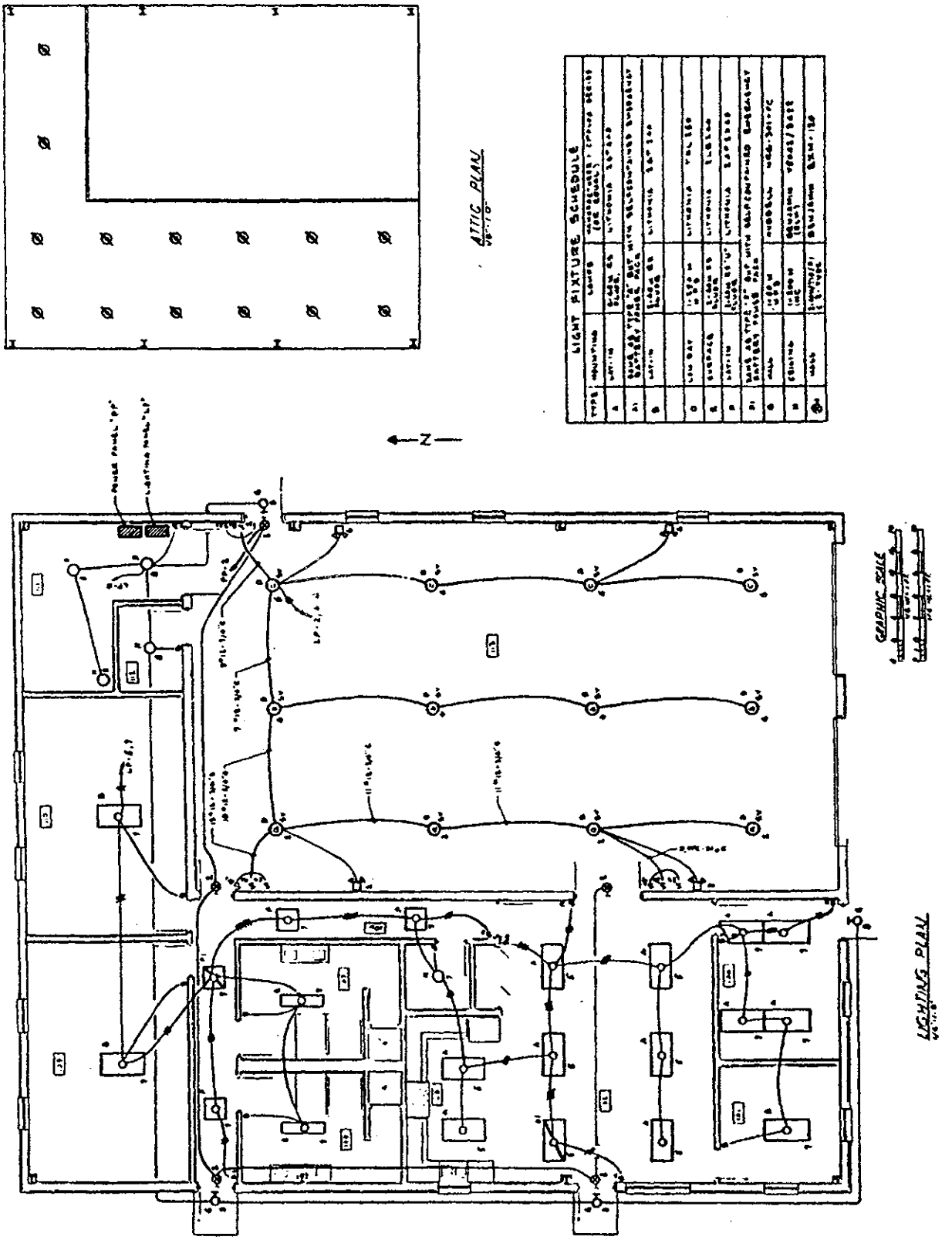

Figure 9-63. Interior Lighting Plan and Schedule

b. Lighting circuits may include feeders, transformers, panelboards, wires, cables, raceways, switches, lamps, outlets, emergency-lighting batteries, relays, etc.

c. Delineation for 277-volt and 120-volt systems shall include runs from the load-center substation through the lighting control panels or auxiliary contactors to the lights.

d. Size, material, etc., shall be given for wire, conduit, and special fittings.

e. Security-lighting circuits shall be distinguished from other lighting.

f. Emergency battery-powered lighting units that are activated by power failures shall clearly indicate the lighting or receptacle circuits to which they are connected.

g. Mounting height for fixtures shall be given by note or shown on elevations.

h. The lighting symbols may include number or letter codes (within or adjacent to them), which cross-reference branch circuits, fixture types, size, voltage, and the switches by which the lights are activated.

i. Panel connection details shall be shown and a panel schedule may be used. The mounting height shall be given by note or in elevation, if not covered in the specification.

j. The mounting height of switches shall be given by note or in elevation unless covered in the specification.

9.6.8 EXTERIOR LIGHTING.

9.6.8.1 Definition. An exterior lighting plan depicts the lighting circuits, fixtures, and accessories that are not within or part of buildings or similar structures. Street, fence, parking lot, flood lighting, etc., may be classed as exterior lighting. (See figure 9-64.)

9.6.8.2 Requirements. The following requirements shall apply when preparing an exterior lighting plan:

a. Wire and conduit sizes, types of fixtures, pole height and class, switches, weather-protection details, etc.

b. "Tie-in" information showing how the exterior lighting circuits connect to building or substation

c. Aircraft warning lights and daytime warning features shall be delineated on separate drawings

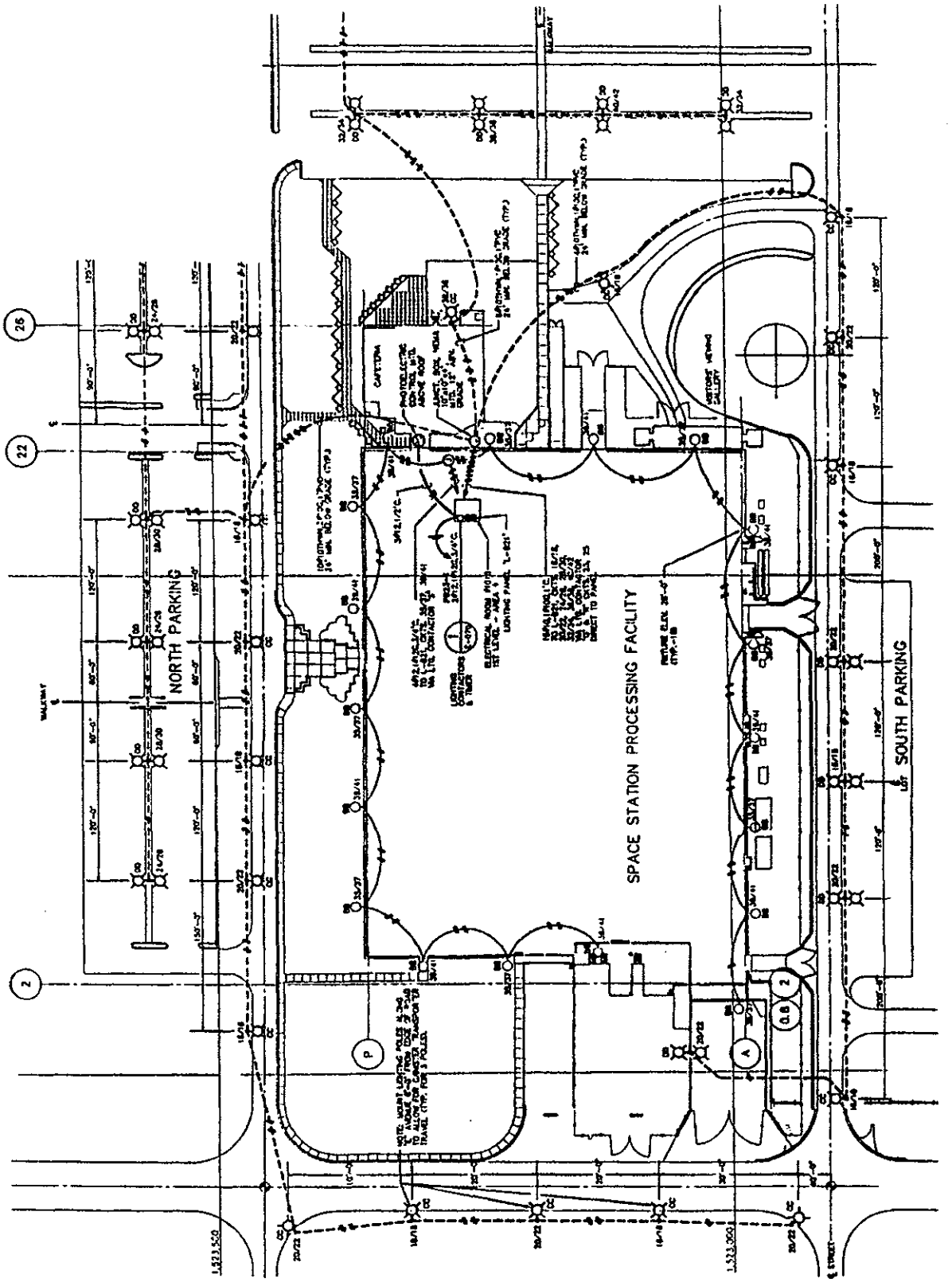

Figure 9-64. Exterior Lighting Plan

d. This type of plan should be integrated with the exterior power plan.

9.6.9 BUILDING OR STRUCTURE GROUNDING (INTERIOR).

9.6.9.1 Definition. A building or structure ground plan depicts circuits that are within or a part of a structure and that are connected to the earth or its equivalent. (See figure 9-65.) The five basic types of grounding are as follows:

a. Equipment grounding to protect

b. Shield grounding for protection from radiated interferences

c. Power-equipment grounding at the source (such as generators, transformers switchgear buses, and power-distribution panels) to limit short-circuit damage to components in the electrical system

d. Grounding to prevent the buildup of static electricity which may arc and cause explosions in hazardous areas

e. Grounding and bonding of air terminals and structures to provide lightning protection

9.6.9.2 Requirements. The following requirements shall apply when preparing a building or structure interior grounding plan:

a. Power system neutral conductors shall be differentiated from grounding conductors.

b. Grounding paths shall be shown, whether made through wires, buses, conduit, ducts, rods, and or other items serving as ground conductors. Bonding information shall be included.

c. Materials (copper, aluminum, or ferrous), sizes, stranding, and location of grounding conductors shall be indicated.

d. Ground systems for lightning protection shall be distinguished from other grounding.

e. Electrical shielding of enclosures to prevent reception or transmission of radio-frequency waves shall be shown.

9.6.10 EXTERIOR GROUNDING.

9.6.10.1 Definition. An exterior grounding plan depicts circuits that are not within or part of buildings or structures. The various building or facility grounding systems are interconnected on the drawing to create an overall grounding system. (See figure 9-66.)

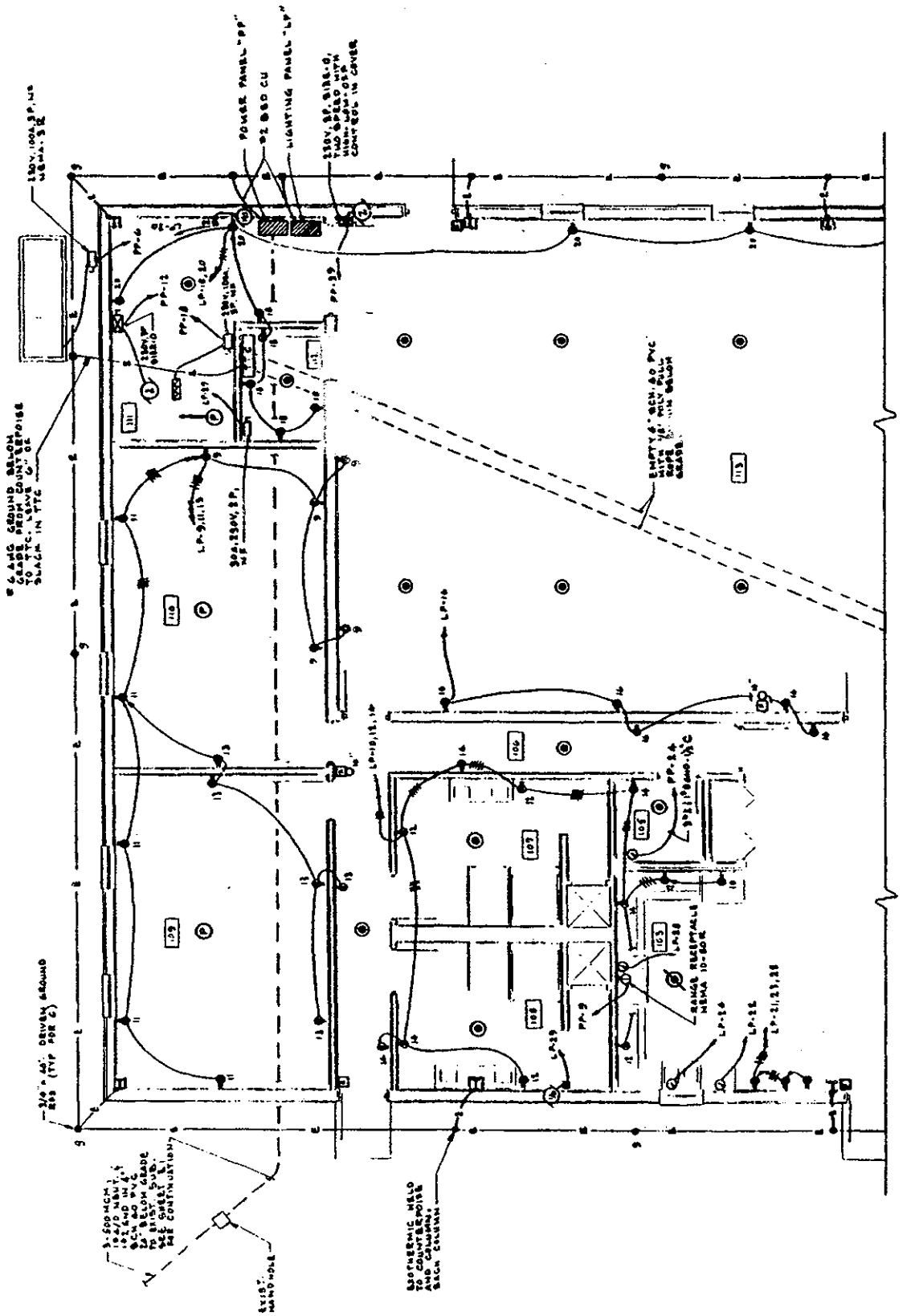

Figure 9-65. Interior Grounding Plan

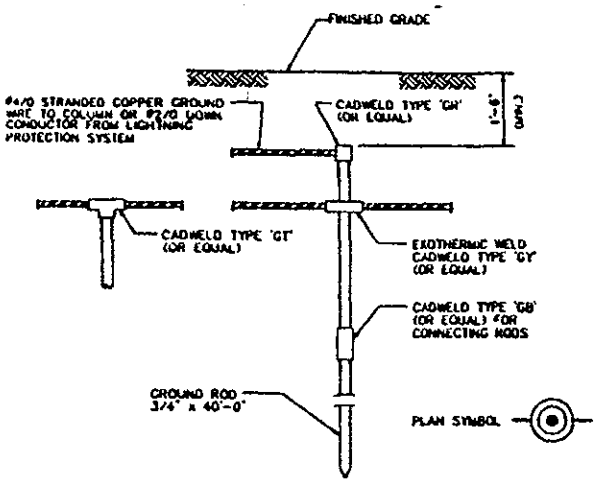

GROUND ROD INSTALLATION

DETAIL 1

NOT TO SCALE

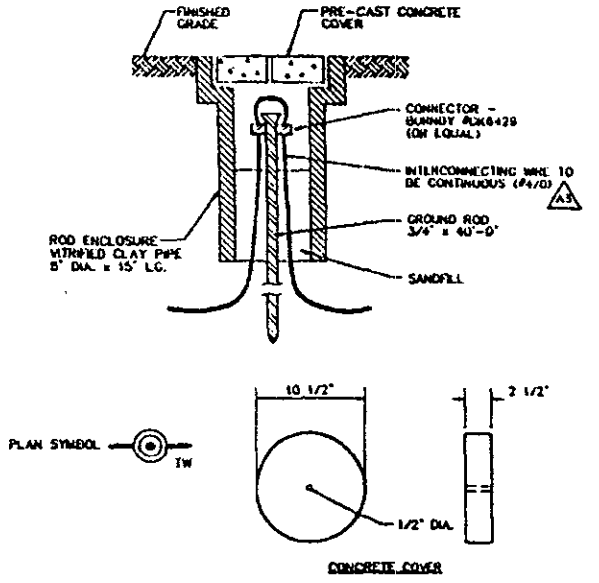

TEST WELL INSTALLATION

DETAIL 2

NOT TO SCALE

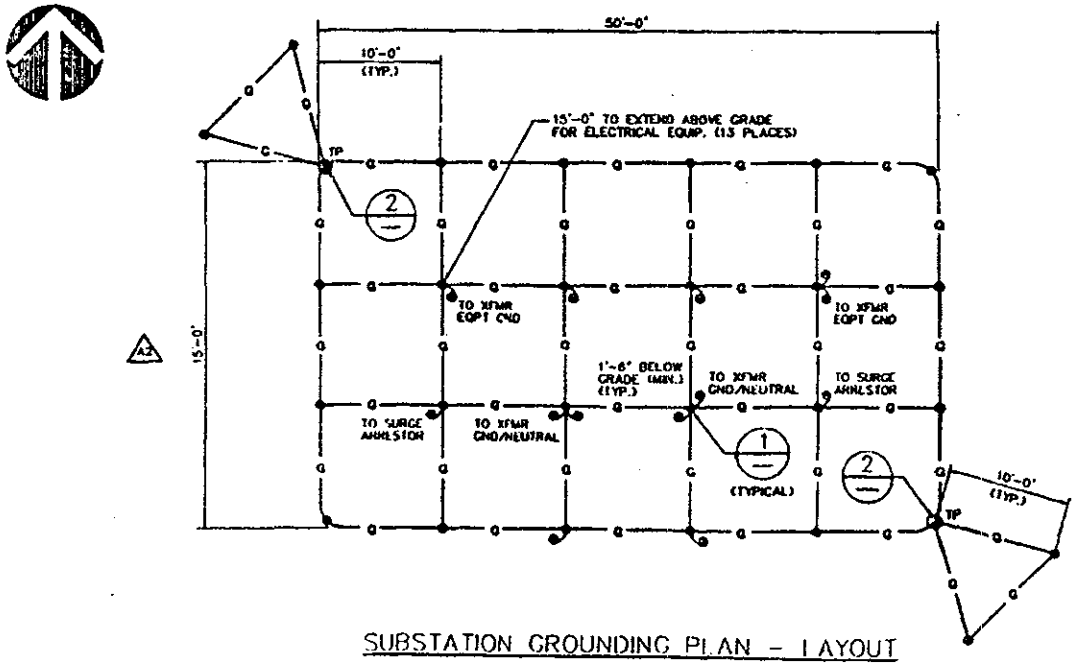

SUBSTATION GROUNDING PLAN - LAYOUT

(TYPICAL FOR SUBSTATIONS #1,2,3)

Figure 9-66. Exterior Grounding Plan

9.6.10.2 Requirements. The following requirements shall apply when preparing an exterior grounding plan:

a. Identification of cable by size, material, bonding, protective treatment, and whether exposed or underground

b. Location and methods of attachments to the building or structure grounding system

c. The exterior grounding may be combined with the site power plan.

d. Main substation grounding systems shall be treated separately but shown on the exterior grounding plan.

9.6.11 CATHODIC PROTECTION.

9.6.11.1 Definition. A cathodic protection plan depicts installations to prevent corrosion or erosion of metals due to galvanic or anodic action. (See figure 9-67.) Conditions which may require cathodic protection are:

a. Underground metallic pipes and structures

b. Interiors of elevated tanks

c. Exterior and interior surfaces of buried or partially buried tanks and large pipes

d. Lead-covered cables

e. Equipment in manholes and underground vaults subject to frequent immersion

f. Metallic structures submerged in water

9.6.11.2 Requirements. The following requirements shall apply when preparing a cathodic protection plan:

a. Pipe lines requiring cathodic protection shall show:

(1) The electrical bonding of noninsulated couplings (e.g., dresser couplings)

(2) The separation of pipe lines from other pipe lines and metallic structures

(3) Meters and tie-in insulation

(4) Joint insulation at sectionalized locations

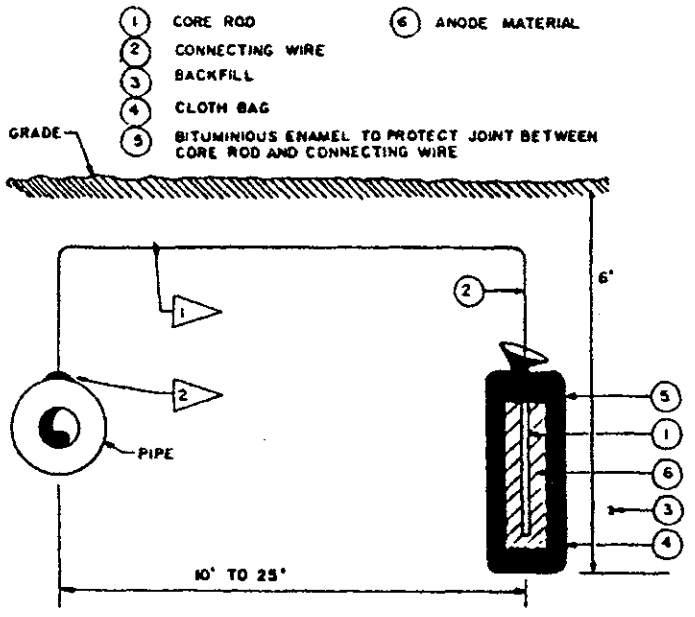

TYPICAL SACRIFICIAL ANODE INSTALLATION
NOT TO SCALE

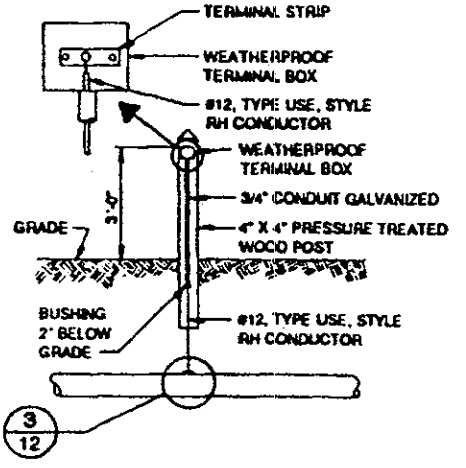

CATHODIC PROTECTION TEST STATION
NOT TO SCALE
POST MOUNTED SHOWN-WALL MOUNTING SIMILAR

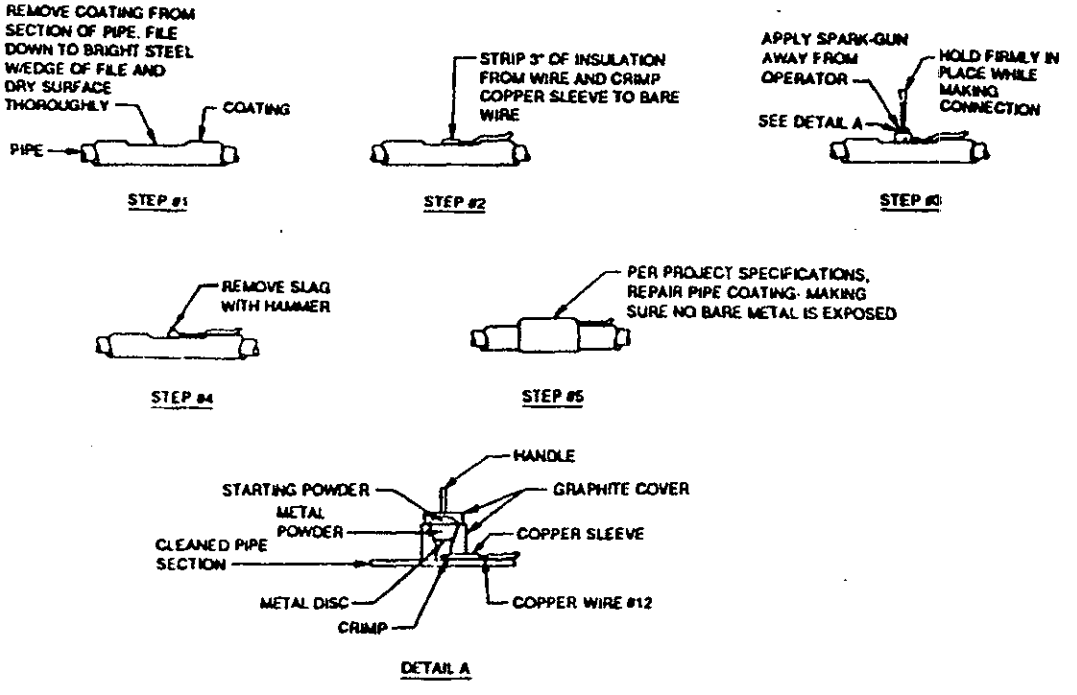

TYPICAL CATHODIC THERMITE CONNECTION 3/12
NOT TO SCALE

Figure 9-67. Cathodic Protection

b. Underground structures requiring cathodic protection shall show:

(1) The insulation of these structures from pipe lines or other structures

(2) The location of anodes

c. Cable installation requiring cathodic protection shall show:

(1) The sectionalized anodes and regulated current to each section

(2) The lead-covered cable for continuous anode sections

d. The placement of anodes protecting equipment in manholes or underground vaults

e. The location and insulation of test plates connected to water tanks

f. Steel pilings, piping, and other structures in salt water indicating the placement of the magnesium ribbon or other materials used in magnesium-anodes cathodic protection

9.6.12 BUILDING OR STRUCTURE COMMUNICATIONS.

9.6.12.1 Definition. A building or structure communications plan depicts the interconnecting electrical circuits between devices such as telephones, telegraph, closed-circuit television, intercoms, etc., and alarm or signaling systems such as fire and sprinkler alarm, security alarm, etc. (See figure 9-68.)

9.6.12.2 Requirements. The following requirements shall apply when preparing a building or structure communications plan:

a. The location of the communication equipment shall be shown or noted.

b. The interconnecting wiring or cabling shall be shown.

c. When more than one circuit is shown on a plan, each shall be identified.

d. Underfloor raceways, feeder and distribution ducts, junction boxes, adapters, leveling screws, saddle supports, etc., shall be located and described.

e. Area-security alarm systems wiring shall be distinct from all other wiring.

f. Signaling systems for visible or audible alert, warning, notification, etc., can be routed with other communication facilities and may therefore be shown on the same plans.

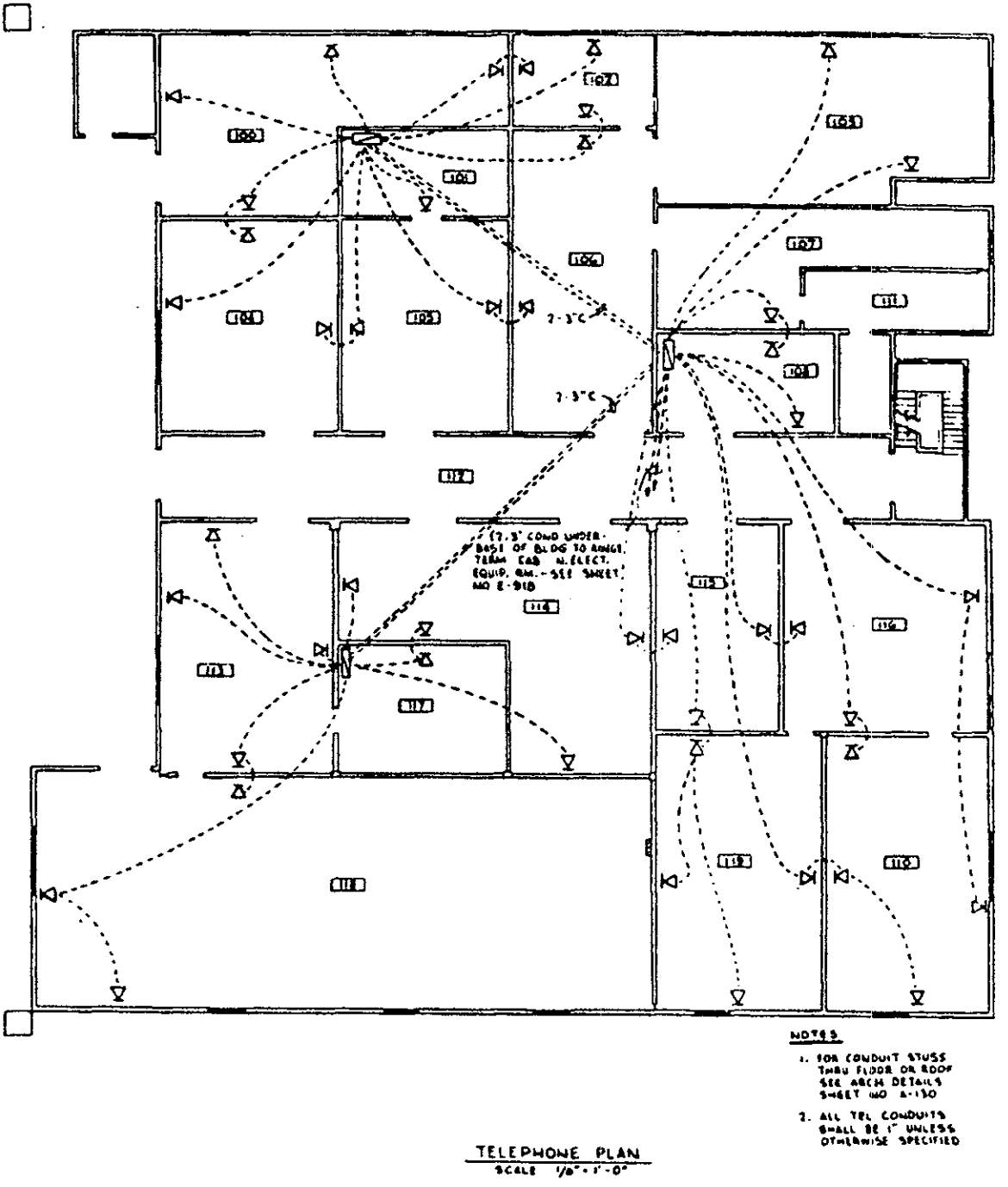

Figure 9-68. Example of a Building or Structure Communications Plan

9.6.13 EXTERIOR COMMUNICATIONS.

9.6.13.1 Definition. An exterior communications plan depicts interconnecting electrical circuits, external to buildings or structures, to complete a facilities communication system. (See figure 9-69.)

9.6.13.2 Requirements. The following requirements shall apply when preparing an exterior communications plan:

a. The layout shall show routing, pole or duct location, manholes, etc.

b. Power-distribution information should be excluded except when an interface with the communication system exists; however, if these are combined, each system shall be distinguishable.

c. When more than one communication system is shown on a plan, each system shall be distinguishable.

d. Plan and profiles shall be prepared when interference is likely or unusual topographical conditions exist.

9.6.14 FIRE ALARM RISER DIAGRAM.

9.6.14.1 Definition. A fire alarm riser diagram depicts the fire alarm devices and their functional relationship and interconnection. (See figure 9-70.)

9.6.14.2 Requirements. The following requirement shall apply when preparing a fire alarm system riser diagram.

a. The fire alarm panel and type shall be shown.

b. The functional connection of power with associated disconnect switch shall be shown and the power panel designation shall be indicated.

c. All associated modem/battery/voice/auxiliary panels with their functional interconnects to other panels/components shall be shown.

d. The functional connection to the outside communication interface shall be shown.

e. The riser diagram shall indicate a separate branch for each zone and the device types and locations shall be indicated for each zone.

f. Other system (e.g., halon, water spray, etc.) functional interfaces shall be indicated.

g. The specific address of an addressable device with respect to the facility fire alarm panel shall be indicated.

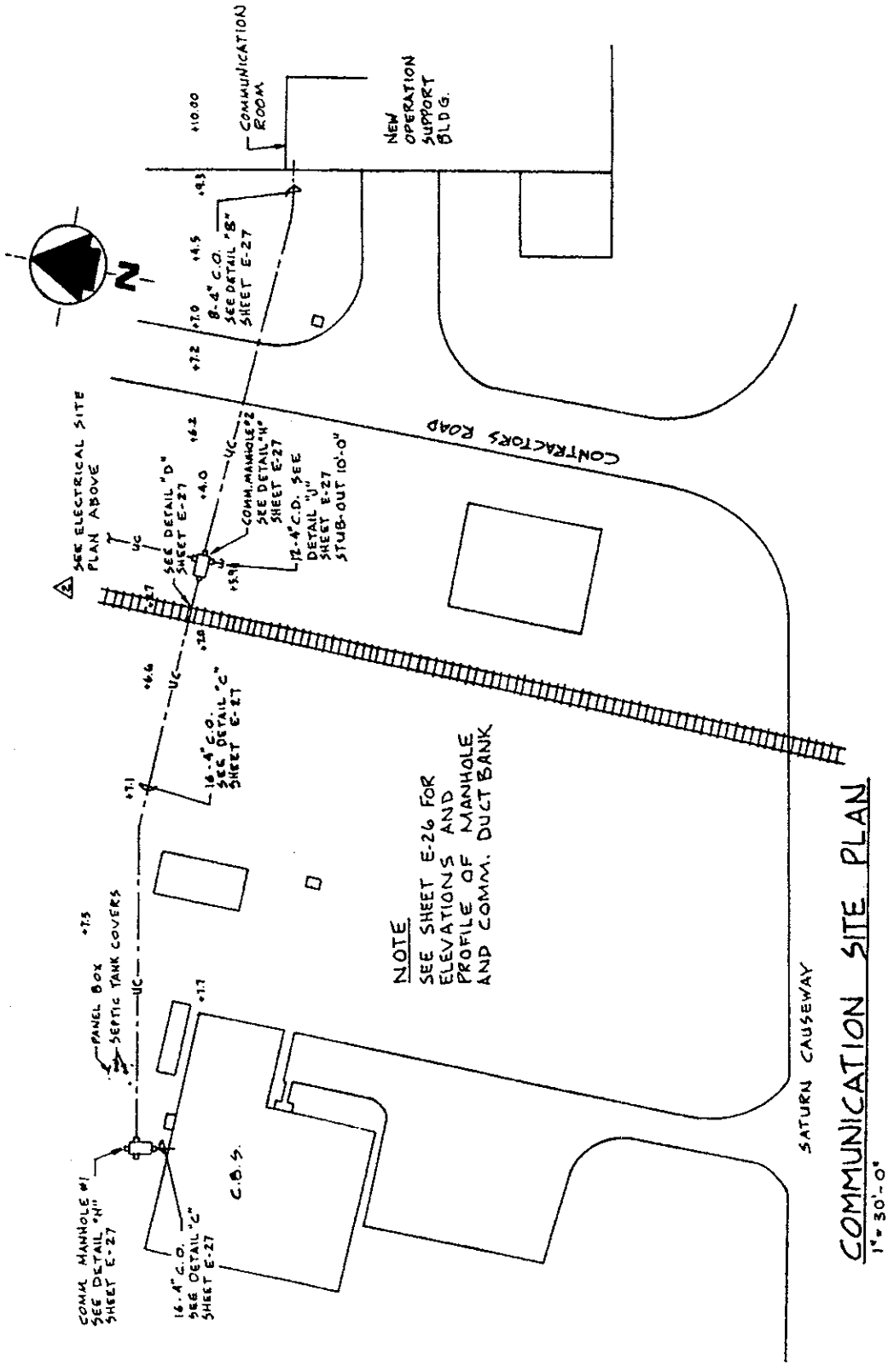

Figure 9-69. Exterior Communications Plan

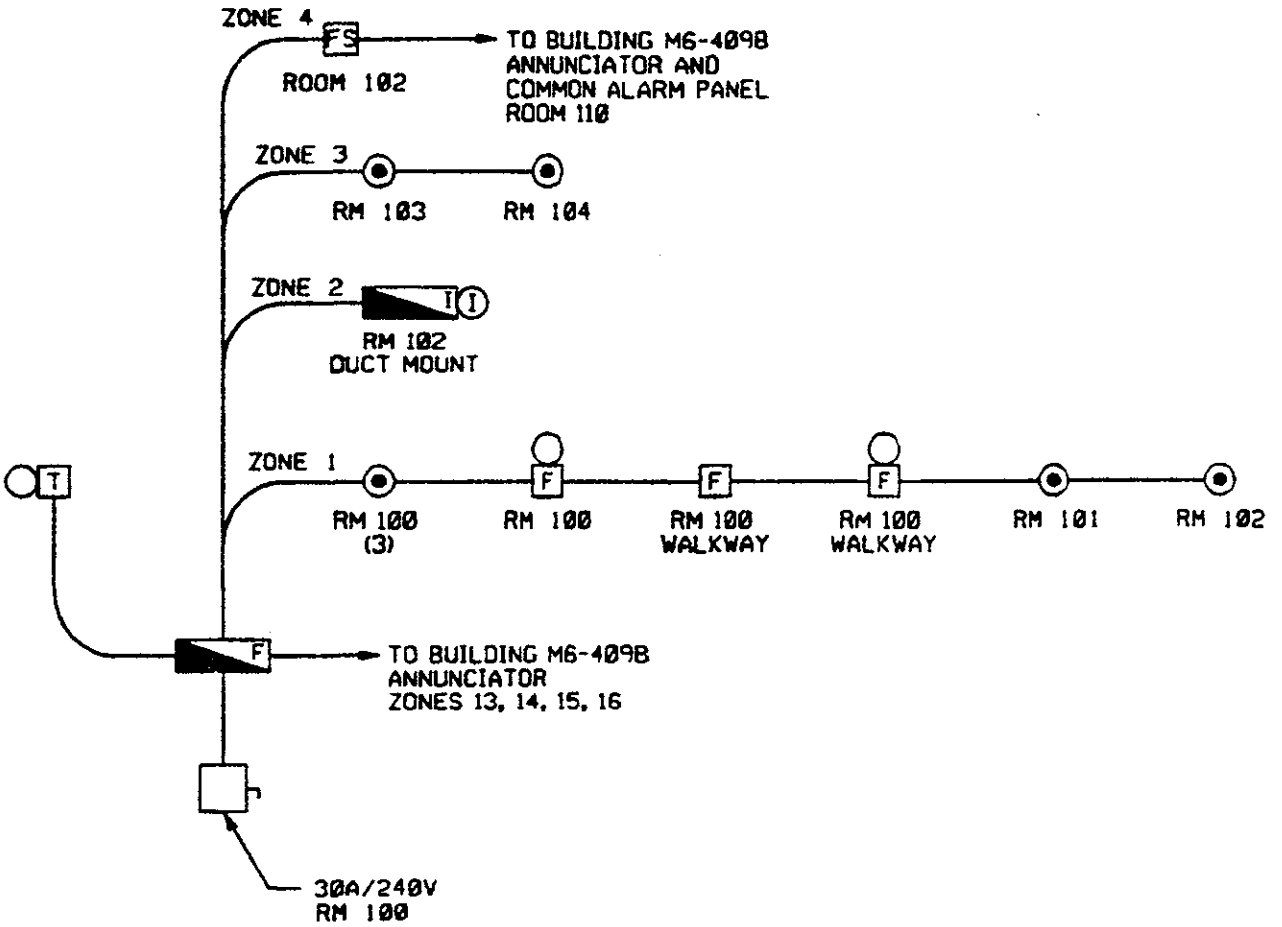

Figure 9-70. Example of a Fire Alarm Riser Diagram

9.7 FUNCTIONAL DESIGNATIONS

9.7.1 DEFINITIONS.

9.7.1.1 General. Functional designations are words, abbreviations, or meaningful number or letter combinations, usually derived from the function of an item, used on drawings, equipment, and instructional material to identify items of a complete control system or equipment.

9.7.1.2 Switchgear Designations. Switchgear designations are numbers that describe the functions performed by electrical devices in switching circuits used in the generation, transmission, and distribution of electric power. Supplementary letters and numbers are used with the basic designation to permit positive identification of an item.

9.7.1.3 Control-Device Designations. Control-device designations are letters used to identify the function of electric-control devices, other than those used in missiles and aircraft, on power-utilization equipment. Suitable prefix numbers and letters are added to the basic designation to distinguish between devices performing similar functions.

9.7.2 REQUIREMENTS.

9.7.2.1 General. Switchgear and control-device designations shall not be used in electronic circuits. Only one system of designations should be used on one complete drawing or set of drawings. When using functional designations on an individual item of equipment, supplementary letters or numbers shall have one meaning only and the meaning shall be clearly designated in a device list on the drawing. Where necessary to avoid conflict, other words beginning with the same letter shall be written out each time.

9.7.2.2 Switchgear Designations. A device-function number, with appropriate suffix letter or letters where necessary, should be used to identify the function of each device in all types of partial automatic and automatic switchgear, and in many types of manual switchgear. These numbers may be used on drawings, in publications, and in specifications. In addition, for automatic switchgear, the number may be placed on or adjacent to each device in the assembled equipment so that the device may be readily identified.

NOTE

Device-function designations may either define the actual function the device performs or refer to the electrical or other quantity to which the device is responsible. Hence, there may be a choice of the function number to be used for a given device. The choice should be that having the narrowest interpretation so that it most specifically identifies the device.

Standard device-function numbers, each with its corresponding function name and a general description of each function, are listed below.

NOTE

When alternate names and descriptions are included under the function, only the name and description which applies to each specific case should be used. In general, only one name for each device (such as relay, contactor, circuit breaker, switch, monitor, or other device) is included in each function designation. However, when the function is not restricted to a specific type of device and where the type of device itself is merely incidental, any of the applicable names listed below may be substituted. For example, if a contactor is used in place of a circuit breaker for device-function 6, the function name should be specified as "Starting Contactor."

Numbers from 95 to 99 should be assigned only for those functions where none of the assigned standard device-function numbers are applicable. Numbers which are "reserved for future application" should not be used.

1. Master Element: the initiating device, such as a control switch, voltage relay, float switch, etc., which serves either directly or through permissive devices such as protective and time-delay relays to place an item of equipment in or out of operation.

2. Time-Delay Starting or Closing Relay: gives a time delay before or after any point in a switching-sequence operation or protective-relay system, except as specifically provided by device functions 48, 62, and 79.

3. Checking or Interlocking Relay: operates in response to the position of a number of other devices (or to a number of predetermined conditions) to allow an operating sequence to proceed or stop, or to provide a check of the position of these devices or of these conditions.

4. Master Contactor: a device, generally controlled by device-function 1 or equivalent and permissive and protective devices, that serves to make and break the necessary control circuits to place a piece of equipment in operation under the desired conditions and to take it out of operation under other or abnormal conditions.

5. Stopping Device: a control used primarily to shut down a piece of equipment and hold it out of operation. (This device may be manually or electrically actuated, but it does not have the function of electrical lockout. See device function 86, on abnormal conditions.)

6. Starting Circuit Breaker: a device whose principal function is to connect a piece of equipment to its source of starting voltage.

7. Anode Circuit Breaker: a device used in the anode circuit of a power rectifier to interrupt the rectifier circuit if an arc-back should occur.

8. Control-Power Disconnecting Device: used to connect and disconnect the source of control power to and from the control bus or equipment. Examples are: knife switch, circuit breaker, and pullout fuse block.

NOTE

Control power includes auxiliary power supplying such apparatus as small motors and heaters.

9. Reversing Device: used to reverse a machine field or to perform any other reversing functions.

10. Unit Sequence Switch: used to change the sequence in which units are placed in and out of service in multiple-unit equipments.

11. Reserved for future application

12. Overspeed Device: usually a direct-connected speed switch which functions on machine overspeed.

13. Synchronous-Speed Device: operates at approximately the synchronous speed of a machine, such as a centrifugal-speed switch, a slip-frequency relay, a voltage relay, or an undercurrent relay.

14. Underspeed Device: functions when the speed of a machine falls below a predetermined value.

15. Speed or Frequency-Matching Device: functions to match and hold the speed or the frequency of a machine or of a system equal to, or approximately equal to, that of another machine, source, or system.

16. Reserved for future application

17. Shunting or Discharge Switch: opens or closes a shunting circuit around any piece of apparatus (except a resistor) such as a machine field, a machine armature, a capacitor, or a reactor.

NOTE

This excludes devices performing shunting operations necessary to start a machine by device 6 or 42, or their equivalent, and also excludes device function 73 that serves for switching resistors.

18. Accelerating or Decelerating Device: used to close circuits that increase or decrease the speed of a machine.

19. Starting-to-Running Transition Contactor: operates to initiate or use the automatic transfer of a machine from the starting to the running power connection.

20. Valve: used in a vacuum, air, gas, oil, or similar line, and is electrically operated or has electrical accessories such as auxiliary switches.

21. Distance Relay: functions when the circuit admittance, impedance, or reactance increases or decreases beyond predetermined limits.

22. Equalizer Circuit Breaker: controls or makes and breaks the equalizer or the current-balancing connections for a machine field or for regulating equipment in multiple-unit installations.

23. Temperature-Control Device: raises or lowers the temperature of a machine or other apparatus, or any medium, when its temperature falls below or rises above a predetermined value. An example is a thermostat that switches on a space heater in a switchgear assembly when the temperature falls to a desired value, as distinguished from a device used to provide automatic temperature regulation between close limits (which would be designated as device function 90T).

24. Reserved for future application

25. Synchronizing or Synchronism Check Device: operates when two ac circuits are within the desired limits of frequency, phase angle, or voltage to permit or cause the paralleling of the two circuits.

26. Apparatus Thermal Device: functions when the temperature of the shunt field or the amortisseur winding of a machine, or a load-limiting or load-shifting resistor, or a liquid or other medium exceeds a predetermined value; or if the temperature of the

protected apparatus, such as a a power rectifier, or a medium decreases below a predetermined value.

27. Undervoltage Relay: functions on a given value of undervoltage.

28. Flame Detector: monitors the presence of the pilot or main flame in such apparatus as gas turbines or steam boilers.

29. Isolating Contactor: used to disconnect one circuit from another for emergency operation, maintenance, or test.

30. Annunciator Relay: a nonautomatic reset device that gives a number of separate visual indications concerning functioning of protective devices. It may also be arranged to perform a lockout function.

31. Separate Excitation Device: connects a circuit, such as the shunt field of a synchronous converter, to a source of separate excitation during the starting sequence, or energizes the excitation and ignition circuits of a power rectifier.

32. Directional Power Relay: functions at a desired value of power flow in a given direction or upon reverse power resulting from arc-back in the anode or cathode circuits of a power rectifier.

33. Position Switch: makes or breaks contact when the main device or piece of apparatus reaches a given position.

34. Master Sequence Device: (such as a motor-operated multicontact switch or equivalent, or a programming device such as a computer): establishes or determines the operating sequence of the major devices in a piece of equipment during starting and stopping or other sequential switching operations.

35. Brush-Operating or Slip-Ring Short-Circuiting Device: raises, lowers, or shifts the brushes of a machine, or short-circuits its slip-rings, or disengages the contacts of a mechanical rectifier.

36. Polarity of Polarizing Voltage Device: operates, or permits the operation of, another device on a predetermined polarity only, or verifies the presence of a polarizing voltage in equipment.

37. Undercurrent or Underpower Relay: functions when the current or power flow decreases below a predetermined value.

38. Bearing Protective Device: functions at excessive bearing temperature or other abnormal mechanical conditions associated with the bearing, such as undue wear, that may result in excessive bearing temperature or failure.

39. Mechanical Condition Monitor: functions upon the occurrence of an abnormal mechanical condition (except that associated with bearing as covered under device-function 38), such as excessive vibration, eccentricity, expansion, shock, tilting, or seal failure.

40. Field Relay: functions on a given, abnormally low value, or failure of machine field current, or on an excessive value of the reactive component of armature current indicating abnormally low field excitation in an ac machine.

41. Field Circuit Breaker: functions to apply or remove the field excitation of a machine.

42. Running Circuit Breaker: connects a machine to its source of running or operating voltage. This function may also be used for a device such as a contactor, in series with a circuit breaker or other fault-protecting means, for frequent opening and closing of the circuit.

43. Manual Transfer or Selector Device: manually transfers the control circuits to modify operation of the switching equipment or some of the devices.

44. Unit Sequence Starting Relay: functions to start the next available unit in a multiple-unit piece of equipment when the normal preceding unit fails or is unavailable.

45. Atmospheric-Condition Monitor: functions upon the occurrence of an abnormal atmospheric condition, such as damaging fumes, explosive mixtures, smoke, or fire.

46. Reverse-Phase or Phase-Balance Current Relay: functions when the polyphase currents are of reverse-phase sequence, or when the polyphase currents are unbalanced or contain negative phase-sequence components above a given amount.

47. Phase-Sequence Voltage Relay: functions upon a predetermined value of polyphase voltage in the desired phase sequence.

48. Incomplete Sequence Relay: returns the equipment to the normal position and locks it out if the normal starting, operating, or stopping sequence is not correctly completed within a predetermined time. If the device is used for alarm purposes only, it should be designated as 48A (alarm).

49. Machine or Transformer Thermal Relay: functions when the temperature of a machine armature or other load-carrying winding or element of a machine or the temperature of a power rectifier or power transformer (including a power rectifier transformer) exceeds a predetermined value.

50. Instantaneous Overcurrent or Rate-of-Rise Relay: functions instantaneously on an excessive value of current or an excessive rate of current rise, indicating a fault in the apparatus or circuit being protected.

51. AC Time Overcurrent Relay: has either a definite- or inverse-time characteristic that functions when the current in an ac circuit exceeds a predetermined value.

52. AC Circuit Breaker: used to close and interrupt an ac power circuit under normal conditions or to interrupt a circuit under fault or emergency conditions.

53. Exciter or DC Generator Relay: forces the dc machine field excitation to build up during starting or functions when the machine voltage has built up to a given value.

54. Reserved for future application

55. Power Factor Relay: operates when the power factor in an ac circuit rises above or falls below a predetermined value.

56. Field Application Relay: automatically controls the application of the field excitation to an ac motor at some predetermined point in the slip cycle.

57. Short-Circuiting or Grounding Device: functions automatically or manually to short-circuit or ground a circuit.

58. Rectification Failure Relay: functions if one or more anodes of a power rectifier fails to fire or to detect an arc-back, or failure of a diode to conduct or block properly.

59. Overvoltage Relay: functions on a given value of overvoltage.

60. Voltage- or Current-Balance Relay: operates on a given difference in voltage, or current input or output, of two circuits.

61. Reserved for future application

62. Time-Delay Stopping or Opening Relays: serves in conjunction with the device that initiates the shutdown, stopping, or opening operation in an automatic-sequence or protective-relay system.

63. Liquid- or Gas-Pressure or Vacuum Relay: operates on given values of liquid or gas pressure or on given rates-of-change of these values.

64. Ground Protective Relay: functions on failure of the insulation of a machine, transformer, or of other apparatus to ground, or on flashover of a dc machine to ground.

NOTE

This function is assigned to a relay that detects the flow of current from the frame of a machine or enclosing case or structure of a piece of apparatus to ground, or detects a ground on a normally ungrounded winding or circuit. It is not applied to a device connected in the secondary circuit or secondary neutral transformer connected in the power circuit of a normally grounded system.

65. Governor: an assembly of fluid, electrical, or mechanical control equipment used to regulate the flow of water, steam, or other medium to the prime mover, for such purposes as starting, holding speed or load, or stopping.

66. Notching or Jogging Device: functions to allow only a specified number of operations of a given device or equipment, or a specified number of successive operations at a given time sequence. It also functions to energize a circuit periodically or for fractions of specified time intervals, or permits intermittent acceleration or jogging of a machine at low speeds for mechanical positioning.

67. AC Directional Overcurrent Relay: functions on a desired value of ac overcurrent flowing in a predetermined direction.

68. Blocking Relay: initiates a pilot signal for blocking tripping on external faults in a transmission line or in other apparatus under predetermined conditions, or cooperates with other devices to block tripping or to block reclosing on an out-of-step condition or on power swings.

69. Permissive Control Device: a two-position, manually operated switch that, in one position, permits the closing of a circuit breaker or the placing of an equipment into operation, and in the other position prevents the circuit breaker or the equipment from being operated.

70. Rheostat: a variable-resistance device used in an electric circuit. It is electrically operated or has electrical accessories such as auxiliary, position, or limit switches.

71. Liquid- or Gas-Level Relay: operates on given values of liquid or gas level or on given rates-of-change of these values.

72. DC Circuit Breaker: used to close and interrupt a dc power circuit under normal conditions or to interrupt the circuit under fault or emergency conditions.

73. Load-Resistor Contactor: used to shunt or insert a step of load-limiting, shifting, or indicating resistance in a power circuit, or to switch a space heater to the circuit, or to switch a light or regenerative load resistor of a power rectifier or other machine in and out of the circuit.

74. Alarm Relay (other than an annunciator as covered under device function 30): used to operate, or operates in connection with, a visual or audible alarm.

75. Position-Changing Mechanism: used to move a main device from one position to another in a piece of equipment; for example, shifting a removable circuit-breaker unit to and from the connected, disconnected, and test positions.

76. DC Overcurrent Relay: functions when the current in a dc circuit exceeds a given value.

77. Pulse Transmitter: generates and transmits pulses over a telemetering or pilot-wire circuit to the remote indicating or receiving device.

78. Phase-Angle Measuring or Out-of-Step Protective Relay: functions at a predetermined phase angle between two voltages, between two currents, or between voltage and current.

79. AC Reclosing Relay: controls the automatic reclosing and locking out of an ac circuit interrupter.

80. Liquid- or Gas-Flow Relay: operates on given values or gas flow or on given rates-of-change of these values.

81. Frequency Relay: functions on a predetermined value of frequency (either under, over, or on normal system frequency) or on rate-of-change of frequency.

82. DC Reclosing Relay: controls the automatic closing and reclosing of a dc circuit interrupter, usually in response to load-circuit conditions.

83. Automatic Selective Control or Transfer Relay: operates automatically to select between certain sources or conditions in a piece of equipment, or to perform a transfer operation.

84. Operating Mechanism: the complete electrical mechanism or servomechanism, including the operating motor, solenoids, position switches, etc., for a tap charger, induction regulator, or any similar piece of apparatus that has no device function number.

85. Carrier or Pilot-Wire Receiver Relay: operated or restrained by a signal used with carrier-current or dc pilot-wire fault directional relaying.

86. Locking-Out Relay: an electrically operated, manually or electrically reset device that shuts down, or holds a piece of equipment out of service, or both, upon the occurrence of abnormal conditions.

87. Differential Protective Relay: functions on a percentage or phase angle or other quantitative difference between two currents or other electrical quantities.

88. Auxiliary Motor or Motor Generator: used to operate auxiliary equipment such as pumps, blowers, exciters, rotating magnetic amplifiers, etc.

89. Line Switch: a disconnecting, load-interrupter, or isolating switch in an ac or dc power circuit; this device is electrically operated or has electrical accessories such as an auxiliary switch or a magnetic lock.

90. Regulating Device: functions to regulate one or more quantities, such as voltage, current, power, speed, frequency, temperature, and load, at a certain value or between certain (close) limits, for machines, tie lines, or other apparatus.

91. Voltage Directional Relay: operates when the voltage across an open circuit breaker or contactor exceeds a given value in a given direction.

92. Voltage and Power Directional Relay: permits or causes the connection of two circuits when the voltage difference between them exceeds a given value in a predetermined direction and disconnects the two circuits when the power flowing between them exceeds a given value in the opposite direction.

93. Field-Changing Contactor: functions to increase or decrease, in one step, the value of field excitation on a machine.

94. Tripping or Trip-Free Relay: functions to trip a circuit breaker, contactor, or piece of equipment, or to permit immediate tripping by other devices; or to prevent immediate reclosure of a circuit interrupter if it should open automatically, even though its closing circuit is maintained closed.

95.
96.
97. } Used only for specific applications in individual installations where none of the assigned numbered functions from 1 to 94 is suitable.
98.
99.

9.7.2.2.1 Supervisory Control and Indication. A similar series of numbers prefixed by the letters RE (for "remote") shall be used for the interposing relays performing functions that are controlled directly from the supervisory system. Typical examples of such device functions are: RE1, RE5, and RE94.

9.7.2.2.2 Suffix Letters. Suffix letters as listed and classified in the groupings in a., b., c., and d. of this paragraph may be used with device-function numbers for various purposes. They permit more function designations for the large number and variety of devices used in the many types of equipment items covered by this section of the manual. They may also denote individual or specific parts of auxiliary contacts of these devices, or certain distinguishing features, characteristics, or conditions that describe the use of the device or its contacts in the equipment.

Letter suffixes should be used only when they accomplish a useful purpose. For example, when all of the devices in a piece of equipment are associated with only one kind of apparatus, such as a feeder, motor, or generator, do not add the respective suffix letter F, M, or G to any of the device-function numbers.

To prevent conflict or confusion, each suffix should have only one meaning in an individual piece of equipment. To accomplish this, short distinctive abbreviations may also be used as letter suffixes. Each suffix should consist of not more than three, and preferably not more than two, letters to keep the complete function designation as short and simple as possible.

The meaning of the device-function number suffix should be designated in the following manner: TC, trip coil; V, voltage; X, auxiliary relay.

In the case where the same suffix (consisting of one letter or a combination of letters) has different meanings in the same piece of equipment, depending upon the device-function number with which it is used, the complete device-function number with its suffix letter or letters and its corresponding function name should be listed in the legend as follows: 63V, vacuum relay; 70R, raising relay for device 70: 90V, voltage regulator.

a. Separate Auxiliary Devices. The following letters denote separate auxiliary devices as indicated:

C	Closing relay or contactor
CL	Auxiliary relay, closed (energized when main device is in closed position)
CS	Control switch
D	Down position switch relay
L	Lowering relay
O	Opening relay or contactor
OP	Auxiliary relay, open (energized when main device is in open position)
PB	Pushbutton
R	Raising relay
U	Up position switch relay
X, Y, Z	Auxiliary relay

NOTE

In a circuit breaker with a so-called X-Y relay control, the X relay is the device whose main contacts energize the closing coil of the device that, in some other manner such as by the release of stored energy, causes the breaker to close. The contacts of the Y relay provide the antipump feature for the circuit breaker.

b. Device Response Code: These letters indicate the condition or electrical quantity to which the device responds, or the medium in which it is located, such as:

A	Air or amperes
C	Current
E	Electrolyte
F	Frequency or flow or fault
L	Level of liquid
P	Power or pressure
PF	Power factor
O	Oil
S	Speed
T	Temperature
V	Voltage or volts or vacuum
VAR	Reactive power
VB	Vibration
W	Water or watts

c. Device Location or Circuit Type Code. These letters denote the location of the main device in the circuit, the type of circuit in which the device is use, or the type circuit or apparatus with which it is associated. Examples are:

A	Alarm or auxiliary power
AC	Alternating current
AN	Anode
B	Battery or blower or bus

BK	Brake
BP	Bypass
BT	Bus tie
C	Capacitor or condenser or compensator or carrier current
CA	Cathode
D	Discharge
DC	Direct current
E	Exciter
F	Feeder or field or filament
G	Generator or ground
H	Heater or housing
L	Line or logic
M	Motor or metering
N	Network or neutral
P	Pump or phase comparison
R	Reactor or rectifier
S	Synchronizing or secondary
T	Transformer or thyratron
TH	Transformer (high-voltage side)
TL	Transformer (low-voltage side)
TM	Telemeter
U	Unit

NOTE

The suffix "N" is used in preference to "G" for devices connected in the secondary neutral of current transformers, or in the secondary of a current transformer whose primary winding is located in the neutral of a machine or power transformers (except in the case of transmission-line relaying, where the suffix "G" is more commonly used for those relays that operate on ground faults).

d. Code for Parts of a Main Device. These letters denote parts of the main device, divided into the two following categories:

(1) All parts [except auxiliary contacts, position switches, limit switches, and torque limit switches that are covered in 9.7.2.2.2 d.(2)(a) through (g)] that are covered in 9.7.2.2.2 d.

BK	Brake
C	Coil or condenser or capacitor
CC	Closing coil
HC	Holding coil
M	Operating motor
MF	Fly-ball motor
ML	Load-limit motor
MS	Speed-adjust or synchronizing motor
S	Solenoid
SI	Seal-in
TC	Trip coil
V	Valve

(2) All auxiliary contacts and position and limit switches for such devices and equipment such as circuit breakers, contactors, valves, rheostats, and relay contacts.

(a) Contact that is open when the main device is in the standard reference position, commonly referred to as the nonoperated or deenergized position, and that closes when the device assumes the opposite position.

(b) Contact that is closed when the main device is in the standard reference position, commonly referred to as the nonoperated or deenergized position, and that opens when the device assumes the opposite position.

Standard reference positions of some typical devices are shown in table 9-2.

Lowercase a and b designations are to be used for circuit-breaker auxiliary switches unless contacts must be adjusted to change position at a specific point in the travel of the main device.

(c) Auxiliary Switches With Defined Operating Positions. To have the auxiliary, position, or limit designation indicate at what point of travel the contacts change position (as is sometimes necessary in the case of valves and for other main devices), an additional letter (or percentage figure) is added as a suffix to the "a" or "b" designation.

The method of designating position switches for a valve is shown in the diagram and legend in figure 9-71. There are two points to consider in visualizing or describing the operation of these position switches:

1 If the contact is an "a" or "b" as indicated by the first letter

2 The location (at or near) where the contact changes position

a The closed position of the valve (c)

b The open position of the valve (o).

c A specified percentage such as 25 percent of the full-open position.

Use letters other than "o" and "c" for circuit breakers, and switches. For example, for such devices as a clutch, turning gear, rheostat, electrode, and adjusting device, the letters "d," "e," "h," "u," and "d," meaning disengaged, engaged, high, low, up, and down, respectively, are applicable. Other suffix letters may be used for special "a" or "b" position switches if they

Table 9-2 Standard Reference Positions of Typical Devices

Device	Standard Reference Position
Power circuit breaker	Main contacts open
Disconnecting switch	Main contacts open
Load-break switch	Main contacts open
Valve	Closed position
Gate	Closed position
Clutch	Disengaged position
Turning gear	Disengaged position
Power electrodes	Maximum gap position
Rheostat	Maximum resistance
Adjusting means*	Low or down position
Relay**	Deenergized position
Contactor**	Deenergized position
Relay (latched-in type)	See paragraph 9.7.2.2.5
Contactor (latched-in type)	Main contacts open
Temperature relay***	Lowest temperature
Level detector***	Lowest level
Flow detector***	Lowest flow
Speed switch***	Lowest speed
Vibration detector***	Minimum vibration
Pressure switch***	Lowest pressure
Vacuum switch***	Lowest pressure, i.e., highest vacuum

*These may be speed, voltage, current, load, or similar adjusting devices comprising rheostats, springs, levers, or other components for the purpose.

** These electrically operated devices are of the nonlatched-in type, whose contact position is dependent only upon the degree of energization of the operating, restraining, or holding coil or coils, which may or may not be suitable for continuous energization. The deenergized position of the device is with all coils deenergized.

***The energizing influences for these devices are considered to be, respectively, rising temperature, rising level, increasing flow, rising speed, increasing vibration, increasing pressure, and increasing vacuum.

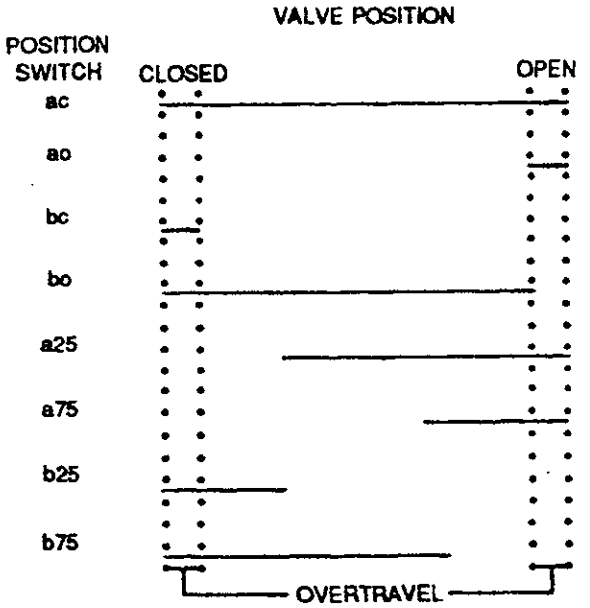

LEGEND:

SOLID LINE INDICATES SWITCH CONTACT CLOSED

EACH OF THE EIGHT VALVE POSITIONS CAN BE DESCRIBED AS FOLLOWS:

ac "a" CONTACT WHICH CHANGES POSITION AT OR NEAR THE CLOSED POSITION OF THE VALVE (OPEN ONLY WHEN VALVE IS CLOSED)

ao "a" CONTACT WHICH CHANGES POSITION AT OR NEAR THE OPEN POSITION OF THE VALVE (CLOSED ONLY WHEN VALVE IS FULLY OPEN)

bc "b" CONTACT WHICH CHANGES POSITION AT OR NEAR THE CLOSED POSITION OF THE VALVE (CLOSED ONLY WHEN THE VALVE IS FULLY CLOSED)

bo "b" CONTACT WHICH CHANGES POSITION AT OR NEAR THE OPEN POSITION OF THE VALVE (OPEN ONLY WHEN THE VALVE IS FULLY OPEN)

a25 "a" CONTACT WHICH CHANGES POSITION WHEN VALVE IS 25-PERCENT OPEN (CLOSED ONLY WHEN VALVE IS OPEN 25 PERCENT OR MORE)

a75 "a" CONTACT WHICH CHANGES POSITION WHEN VALVE IS 75-PERCENT OPEN (CLOSED ONLY (WHEN VALVE IS OPEN 75 PERCENT OR MORE)

b25 "b" CONTACT WHICH CHANGES POSITION WHEN VALVE IS 25-PERCENT OPEN (CLOSED ONLY WHEN VALVE IS OPEN 25 PERCENT OR MORE)

b75 "b" CONTACT WHICH CHANGES POSITION WHEN VALVE IS 75-PERCENT OPEN (CLOSED ONLY (WHEN VALVE IS OPEN 75 PERCENT OR MORE)

Figure 9-71. Method of Designating Position Switches for a Valve

are more appropriate and if their meaning is clearly indicated. For example, an early opening auxiliary switch on a power circuit breaker, adjusted to open when the breaker is tripped before the main contacts part, may be thus described and then designated as an "ae" auxiliary switch.

(d) Auxiliary Switches for Devices Without a Standard-Reference Position. In designating position switches for such a special device as a fuel-transfer switch, which has no standard-reference or nonoperated position and may be placed in either extreme or any intermediate position for normal operation, "a" and "b" designations are still applicable. However, a percentage figure of one of the full-open or on positions should always be used, and should be in terms of the position which is 50 percent or more of full open or on, as shown in figure 9-72.

(e) Auxiliary Switches for Circuit-Breaker Operating Mechanisms. For the mechanically trip free mechanism of a circuit breaker:

1 aa Contact that is open when the operating mechanism of the main device is in the nonoperate position and that closes when the operating mechanism assumes the opposite position

2 bb Contact that is closed when the operating mechanism of the main device is in the nonoperate position and that opens when the operating mechanism assumes the opposite position

The part of the stroke at which the auxiliary switch changes position should be specified in the description. LC is used to designate the latch-checking switch of such a mechanism, which is closed when the mechanism linkage is relatched after an opening operation of the circuit breaker.

(f) Limit Switches. LS designates a limit switch. This is a position that is actuated by a main device, such as a rheostat or valve, at or near its extreme end of travel. Its usual function is to open the circuit of the operating motor but it may also serve to give an indication that the main device has reached an extreme position of travel. The designations ac, ao, bc, and bo are actually more descriptive for valve limit switches than such designations as LSC or LSO. Also, in the case of a fuel-transfer switch as covered in 9.7.2.2.2 d.(2)(d), designations such as a100G, b100G, a100L, and B100L are more descriptive than LS designations since they indicate whether the specific contact is an "a" or a "b."

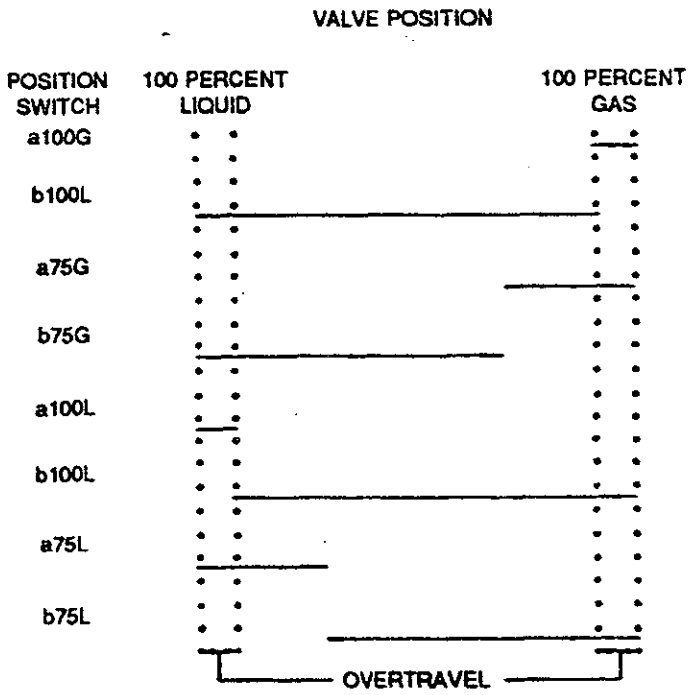

LEGEND:
SOLID LINE INDICATES SWITCH CONTACT CLOSED

EACH OF THE EIGHT POSITIONS CAN BE DESCRIBED AS FOLLOWS:

a100G CLOSED ONLY WHEN 100 PERCENT OF THE FUEL BEING SUPPLIED IS GAS

b100G CLOSED ONLY WHEN LESS THAN 100 PERCENT OF THE FUEL BEING SUPPLIED IS GAS

a75G CLOSED ONLY WHEN 75 PERCENT OR MORE OF THE FUEL BEING SUPPLIED IS GAS

b75G CLOSED ONLY WHEN LESS THAN 75 PERCENT OF THE FUEL BEING SUPPLIED IS GAS

a100L, b100L, a75L, b75L — DESCRIPTIONS ARE THE SAME AS ABOVE, RESPECTIVELY, EXCEPT SUBSTITUTE LIQUID FOR GAS.

Figure 9-72. Method of Designating Position Switches for a Fuel Transfer Switch

(g) Torque Limit Switches. This is a switch used to open an operating motor circuit at a desired torque limiting the extreme end of travel of a main device such as a valve. It should be designated as follows:

tqc	Torque limit switch, opened by a torque-response mechanism to stop valve closing
tqo	Torque limit switch, opened by torque-responsive mechanism, to stop valve opening

(h) Other Switches. If several similar auxiliary, position, and limit switches are present on the same main device, they should be designated with supplementary numerical suffixes 1, 2, 3, etc.

e. Other Codes. The following letters cover all other distinguishing features or characteristics or conditions, not specifically covered in 9.7.2.2.2 a. through 9.7.2.2.2 d. that serve to describe the use of the device or its contacts in the equipment, such as:

A	Accelerating or automatic
B	Blocking or backup
C	Close or cold
D	Decelerating or detonate or down or disengaged
E	Emergency or engaged
F	Failure or forward
H	Hot or high
HR	Hand reset
HS	High speed
L	Left or local or low or lower or leading
M	Manual

O	Open
OFF	Off
ON	On
P	Polarizing
R	Right or raise or reclosing or receiving or remote or reverse
S	Sending or swing
T	Test or trip or trailing
TDC	Time-delay closing
TDO	Time-delay opening
U	Up

f. Suffix-Letter Location. Lower-case suffix letters may be used on electrical diagrams for the auxiliary, position, and limit switches identified in 9.7.2.2.2 d.(2) through 9.7.2.2.2 d.(2)(d). Capital letters shall be used for all other suffix letters identified in 9.7.2.2.2.

Since they generally form part of the device function designation, the letters indicated in 9.7.2.2.2 a. through c. should be written directly after the device function number; for example, 52CS, 71W, or 49D. When it is necessary to use two types of suffix letters in connection with one function number, they shall be separated by a slanted line or dash, for example, 20D/CS or 20D-CS.

The suffix letters shown in 9.7.2.2.2 d. that denote parts of the main device, and those shown in 9.7.2.2.3 that cannot or need not form part of the device-function designation, should be written directly below the device-function number on drawings, for example, $\frac{52}{CC}$ or $\frac{43}{A}$. (See figure 9-73.)

9.7.2.2.3 Suffix Numbers. If two or more devices with the same function number and suffix letter are present in the same piece of equipment, they may be distinguished by numbered suffixes, for example, 4X-1, 4X-2, and 4X-3.

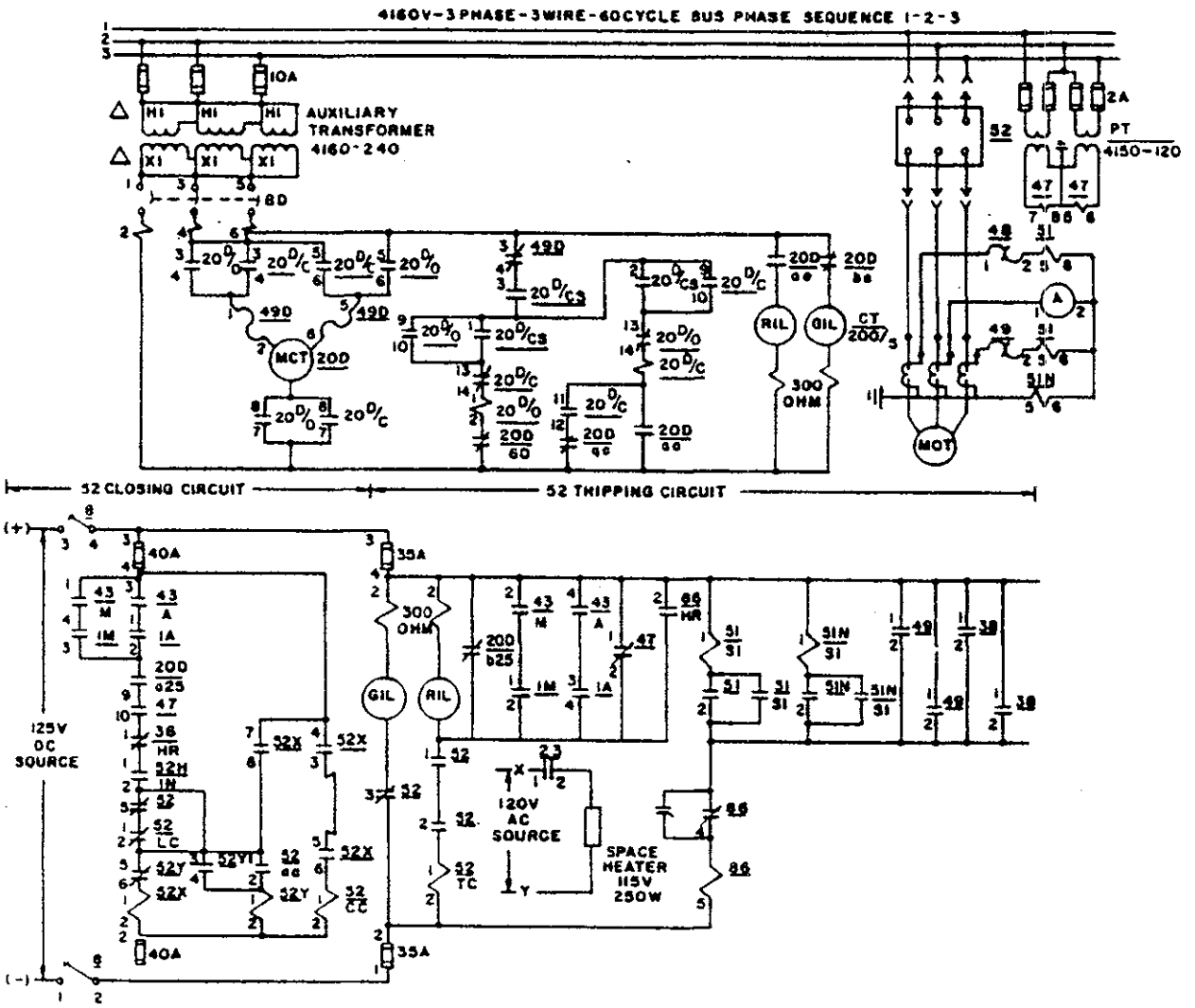

Figure 9-73. Typical Example of Suffix-Letter Designations

9.7.2.2.4 Devices Performing More than One Function. If one device performs two relatively important functions in a piece of equipment so that it is desirable to identify both of these functions, a double function number and name, such as 50/51 Instantaneous and Time Overcurrent Relay, may be used.

9.7.2.2.5 Representation of Device Contacts on Electrical Diagrams. On electrical diagrams, the "a" contacts of all devices as described in 9.7.2.2.2 d.(2) through 9.7.2.2.2 d.(2)(d), including those of relays and those with suffix letters of percentage figures, should be shown as closed contacts. The use of the single letters "a" and "b" with the contact representation

is generally superfluous on the diagrams. However, these letters are a convenient means of reference in the text of instruction books, articles, and other publications.

The opening or closing settings of the contacts and auxiliary, position, and limit switches, covered in 9.7.2.2.2 d.(2)(d) through 9.7.2.2.2 d.(2)(g), should be indicated on the schematic diagram for each contact if necessary for understanding the operation of the devices in the equipment. For relay contacts, this indication would consist of the numerical settings; for switches, it would consist of charts similar to those shown in figures 9-71 and 9-72.

For those devices that have no deenergized or nonoperated position, such as manually operated transfer or control switches (including those with a spring-return) or auxiliary position-indicating contacts on the housing or enclosures of removable circuit-breaker units, the preferred method of representing these contracts is as an "a" switch. The time of closing of each contact should be identified on the schematic diagrams. For example, the contacts of the manual-automatic transfer switch, device-function 43, which are closed in the automatic position, are identified with the letter "a," and those that are closed in the manual position are identified with the letter "M." The auxiliary position on the housing, 52H, of a removable circuit-breaker unit, which are closed when the unit is in the connected position, may be identified by the suffix letters IN, and those which are closed when the unit is withdrawn from the housing may be identified by the suffix letter OUT.

In the case of latched-in or hand-reset locking-out relays, which operate from protective devices to shut down a piece of equipment and hold it out of service, the contacts should be shown in the normal nonlocking-out position. Devices such as electrically operated, latched-in relays that have no deenergized or nonoperate position and are not specifically covered under 9.7.2.2.2 d.(2), should have contacts shown on the position best indicating operation of the devices; the schematic diagram should indicate the contact operation. The schematic diagram shown in figure 9-73 illustrates the recommended method of representing the contacts.

9.7.2.3 Control-Device Designations. The assignment of designations to devices on a specific item of equipment is governed solely by the function (or functions) performed by each device and not by the type or nature of the device or its possible use for other functions in other equipment.

The following list of control-device designations is arranged alphabetically by designation, followed by a general description of the item function. An example of control-device designations is shown in figure 9-74.

NOTE

These definitions are broadly descriptive and do not replace accepted definitions of the terms given.

A — Accelerating and Decelerating Circuit Breaker, Contactor, or Relay: initiates circuit conditions to bring machine up to speed or shut it down. (See designations DB, DE, EDE, ES, FD, and P.)

AL — Alarm Relay (other than an annunciator relay, see designation ANN): operates a visual or audible alarm.

AN — Anode Circuit Breaker or Contactor: connects and disconnects a power rectifier from its source of alternating-current power and interrupts the rectifier circuit on arc-back.

ANN — Annunciator Relay: a nonautomatic-reset device that gives several separate visual indications upon the functioning of protective devices; it may also perform the lockout function.

AS — Armature Shunt Contactor: opens and closes a shunt circuit around a machine armature.

B — Brake Contactor or Relay: initiates the operation of an electrically operated brake.

BC — Balanced Current Relay: operates on the difference in current input or output of two circuits.

BG — Bearing Temperature Relay: functions when bearings reach excessive temperatures.

BT — Bus-Tie Circuit Breaker, Contactor, or Switch: connects buses or bus sections together. (See designation PAR.)

BV — Balanced-Voltage Relay: operates on a difference in voltage between two circuits.

CB — Circuit Breaker: usually interrupts short-circuit or fault currents. It also isolates a power circuit under normal or abnormal conditions.

CL — Close Contactor or Relay: initiates circuit conditions to operate a machine in the "close" direction.

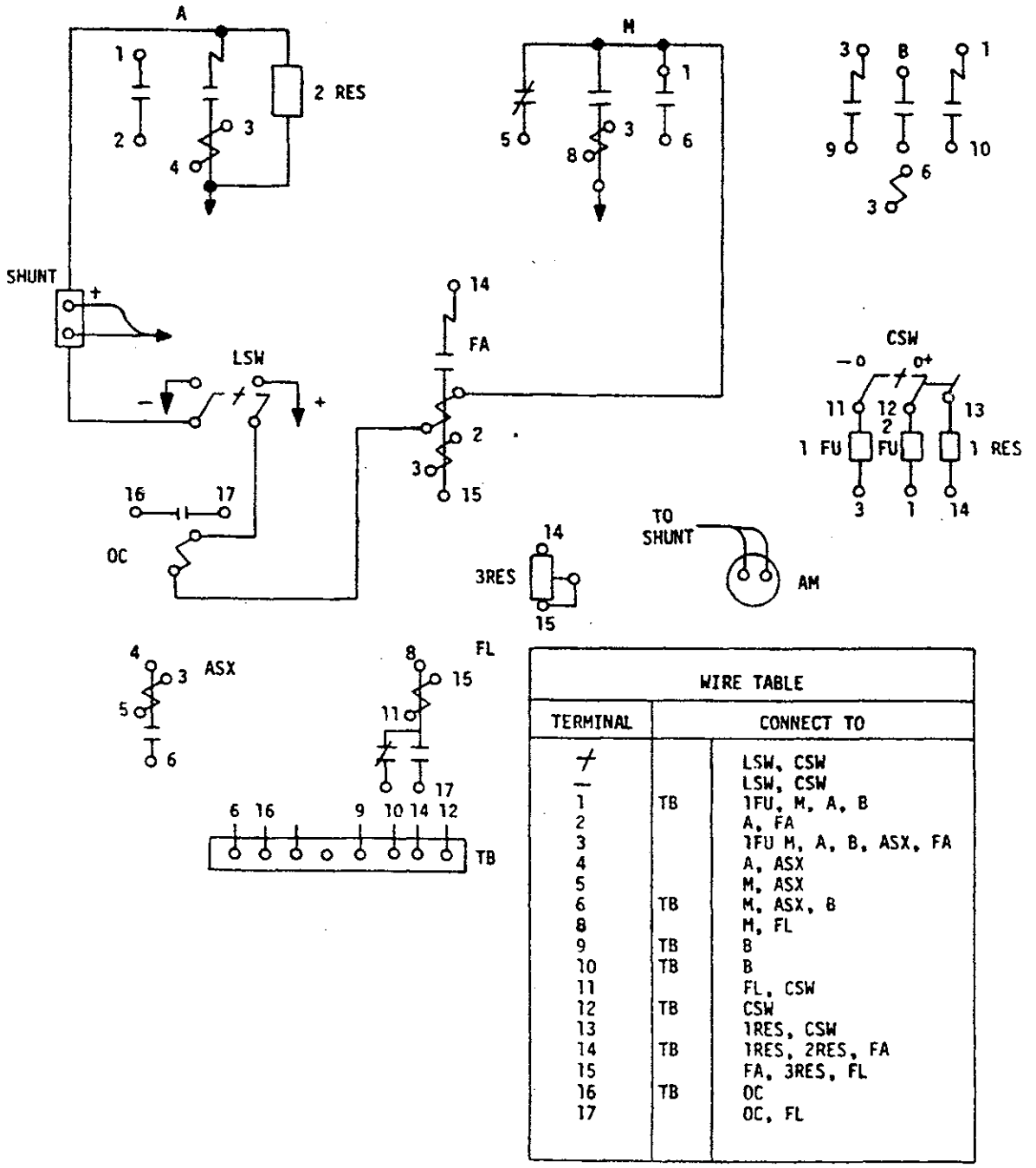

WIRE TABLE		
TERMINAL		CONNECT TO
+		LSW, CSW
−		LSW, CSW
1	TB	1FU, M, A, B
2		A, FA
3		1FU M, A, B, ASX, FA
4		A, ASX
5		M, ASX
6	TB	M, ASX, B
8		M, FL
9	TB	B
10	TB	B
11		FL, CSW
12	TB	CSW
13		1RES, CSW
14	TB	1RES, 2RES, FA
15		FA, 3RES, FL
16	TB	OC
17		OC, FL

Figure 9-74. Example of Control Device Designations

CLA Clamp Contactor or Relay: initiates circuit conditions to perform a "clamp" operation.

CLU Clutch Contactor or Relay: initiates a circuit condition to operate a clutch.

CP Compelling Relay: sequences or compels acceleration (usually of a multispeed alternating-current machine) through a lower speed connection before the machine accelerates to a preselected higher speed.

CPT Control-Power Transformer: serves as the source of alternating-current power to operate ac devices.

CR Control Relay: an auxiliary relay that initiates or permits the next operation in a control sequence.

CSW Control-Power Switch (manually-operated): connects and disconnects the source of control power to and from the control bus or equipment.

CUT Cut Contactor or Relay: initiates circuit conditions to operate a machine to perform a "cut" operation.

D Down Contactor or Relay: initiates circuit conditions to operate a machine to give mechanical motion in the "down" direction.

DB Dynamic Braking Contactor or Relay: initiates circuit conditions to stop a machine by dynamic braking. (See designation A.)

DE Decelerating Contractor or Relay: initiates circuit conditions to stop a machine by regenerative braking or some other method exclusive of dynamic braking, plugging, and normal coasting stop. (See designation A.)

DIC Differential-Current Relay: a fault-detecting relay which functions on a differential current of a given percentage or amount.

EDE Emergency Decelerating Contactor: initiates circuit conditions to produce emergency stopping or reduction in the speed of a machine. (See designation A.)

EQ Equalizer Circuit Breaker or Contactor: makes and breaks the equalizer or current-balancing connections for machine-field or machine-voltage regulators in a multiple-unit installation.

ES Emergency Stop Device: initiates circuit conditions to produce emergency stopping of a machine which may be any form of a braking or coasting stop.

F Forward Contactor or Relay: initiates circuit conditions to operate a machine to give mechanical motion in the forward direction.

FA Field Accelerating Contactor or Relay: forces a direct-current machine field to accelerate a machine up to speed, in some cases a function of certain limits of line current. (See designation FD.)

FC Field Contactor: applies and removes excitation and discharges the field of a machine. (See designation FSW.)

FD Field Decelerating Contractor or Relay: forces a direct-current machine field to decelerate a machine. (See designation FA.)

FF Full-Field (Field-Forcing) or Field-Changing Contactor or Relay: changes the value of excitation on a machine to obtain adequate torque for acceleration, dynamic braking, or some other desired purpose. (See designation MT and LT.)

FL Field-Loss Contactor or Relay: functions at a given machine field current to detect the presence or loss of field current.

FP Field-Protective Contactor or Relay: inserts resistance in the field circuit of a machine or otherwise reduces field excitation while the machine is at rest to protect the field winding from overheating.

FQ Frequency Device: functions at a given frequency, either under, over, or normal.

FR Field-Application Relay: automatically controls the application of machine-field excitation.

FS Fast-Speed Contactor or Relay: initiates circuit conditions to operate a machine at the high (or maximum) speed.

FSW Field Switch: applies and removes excitation and discharges the field of a machine. (See designation FC.)

FW Field-Weakening or Field-Reducing Contactor or Relay: inserts resistance on the field circuit of a machine or otherwise reduces the field excitation. (See designation LT.)

GP Ground-Protective Relay: functions on failure to ground of the insulation of a machine, transformer, or other apparatus or on flashover of a direct-current machine to ground.

H Hoist or Hold Contactor or Relay: The hoist device initiates circuit conditions to operate a machine to give mechanical motion in the hoist direction. The hold device functions by manual selection, through a master element (see designation ME), or the

equivalent, (1) to initiate and maintain a desired condition (such as stall tension) prior to normal operation, or (2) to hold and maintain operation at the conditions prevailing when the selection is made without interference from the automatic control.

IN In Contactor or Relay: initiates circuit conditions to operate a machine to give mechanical motion in the "in" direction.

IS Incomplete Sequence Relay: returns the equipment to the "normal" or "off" position and locks it out if the normal starting, operating, or stopping sequence is not completed within a predetermined time.

ISW Isolating Circuit-Breaker Contactor or Switch: disconnects one circuit from another for emergency operation, maintenance, or test.

J Jog Contactor or Relay: initiates circuits to permit intermittent acceleration or jogging of a machine at low speeds for mechanical positioning of the machine or the material being processed.

KO Kick-Off Contactor or Relay: initiates circuit conditions to operate a machine to "kick-off" material from a conveyor or rollout table, to "kick-off" a crane hoist, or for some similar purpose.

L Lowering or Left Contactor or Relay: initiates circuit conditions to operate a machine to give mechanical motion in the lowering or in the left direction.

LC Load-Compensating Contactor or Relay: initiates circuit conditions to change or adjust the field excitation of a machine or otherwise compensate, usually as a function of load current, to maintain the controlled variable (voltage, speed, etc.) constant or within certain limits. (See designation RG.)

LO Lock-Out Relay or Device: an electrically operated, hand-reset or electrical-reset relay or device that shuts down and holds a piece of equipment out of service if abnormal conditions occur.

LPC Loop-Control Contactor or Relay: initiates the operation of a machine to control the slack in a loop of material in a process line.

LR Load-Resistor Circuit Breaker or Contactor: shunts or inserts a step of load-limiting, shifting, or indicating resistance or switches a space heater in a power circuit.

LS Limit Switch: detects a travel limit or an intermediate travel position for any form or adaptation of mechanical motion. This designation is usually expressed with variations as follows:

LSF	Limit Switch Forward
LSR	Limit Switch Reverse
LSU	Limit Switch Up
LSD	Limit Switch Down
LSOP	Limit Switch Open
LSCL	Limit Switch Close

LSW Line Switch: a disconnecting or isolating switch in a power circuit.

LT Low-Torque Contactor or Relay: initiates circuit conditions to insert resistance in a direct-current machine field or armature or in the secondary circuit of a wound-rotor induction motor to reduce the machine torque to a predetermined minimum value. (See designations FF and FW.)

M Main-Line Contactor: connects a machine or power circuit to its source of running or operating voltage.

ME Master Element: the initiating device (such as a control switch, voltage relay, pushbutton, float switch, etc.) that serves directly or through protective and time-delay relays to place equipment in or out of operation. (See designations MS, CS and PB.)

MR Master Contactor or Relay: a device controlled by a master element (see designation ME), or the equivalent, with the necessary permissive and protective devices, that makes and breaks the necessary control circuits to place equipment into operation under the desired conditions and to take it out of operation under other or abnormal conditions.

MRH Master Rheostat or Electrically Operated Rheostat: varies or adjusts the resistance or potential of a circuit in response to manual adjustment or to electrical control.

MS Master Switch: usually a multiposition control switch which presets and initiates a unit-sequence for each of its operating handle positions; it is a special form of master element. (See designation ME.)

MT Maximum-Torque Contactor: inserts or takes out resistance in direct-current machine field or armature circuit or in the secondary circuit of a wound-rotor induction motor to obtain a machine torque of a certain maximum value. (See designation FF.)

N Neutral Contactor: opens and closes the neutral connection of a machine, transformer, or circuit.

NO Notching Relay: allows a specified number of operations of a given device or equipment, or a specified number of successive operations within a given time. It also allows periodic energizing of a circuit.

OC Overcurrent Relay: functions when the current in a circuit exceeds a given value.

OL Overload Relay: functions when the load of a machine or apparatus becomes excessive.

OP Open Contactor or Relay: initiates circuit conditions to operate a machine to give mechanical motion in the open direction.

OPR Open-Phase, Reverse-Phase Relay: functions when one phase of a polyphase circuit opens or when the phase sequence of a polyphase circuit opens or when the phase sequence of a polyphase circuit reverses.

OS Overspeed Device: functions at a given machine overspeed.

OUT Out Contractor or Relay: initiates circuit conditions to operate a machine to give mechanical motion in the "out" direction.

OV Overvoltage Relay: function at a given circuit overvoltage.

P Plugging Contactor or Relay: initiates circuits to stop or stop-reverse a machine by plugging. (See designation A.)

PAR Paralleling Circuit Breaker, Contactor, or Switch: connects two circuits or machines in parallel. (See designation BT.)

PE Permissive Control Device: generally a two-position manually operated switch that permits a circuit breaker or contactor to close or places a piece of equipment into operation in one position and, in the other position, prevents operation of the circuit breaker, contactor, or equipment.

PF Power Factor Relay: operates at a given power factor in an alternating-current circuit.

PS Pressure Switch: operates at a given fluid pressure. This designation is usually used with a subscript designating the medium to which the pressure switch responds, i.e., air, oil, etc.

R Reverse Contactor or Relay: initiates circuit conditions to operate a machine in the "reverse" direction.

RA Raise Contactor or Relay: initiates circuit conditions to operate a machine in the "raise" direction.

RC Direct-Current Reverse-Current (Power) Relay or Device: functions at a given direct-current reverse current (power).

RET Return Contactor or Relay: initiates circuit conditions to operate a machine in the "return" direction.

RG Regulating Device: maintains or adjusts a quantity such as voltage, current, or power at a certain value or between certain limits.

RSW Reversing Switch: a manually operated device that reverses a power circuit.

RT Right Contactor or Relay: initiates circuit conditions to operate a machine in the "right" direction.

RUN Run Contactor or Relay: initiates circuit conditions to connect a machine to its source of running voltage.

S Starting Contactor, Circuit Breaker, or Switch: initiates circuit conditions to connect a machine to its source of starting voltage.

SC Squirrel-Cage Relay: protects the squirrel-cage starting winding of a synchronous motor during starting or stalled conditions.

SD Slow-Down Contactor or Relay: initiates circuit conditions to change the speed of a machine to some lower operating speed.

SE Selective Control (or Transfer) Contactor or Relay: selects between sources or conditions in a piece of equipment or automatically performs a transfer operation.

SR Series Circuit-Breaker Contactor or Switch: connects two circuits or machines in series.

SS Slow-Speed Contactor or Relay: initiates circuit conditions to operate a machine at slow speed.

ST Stall Contactor or Relay: inserts resistance in the field or armature circuit of a direct-current machine to stall a motor-driven unit.

STP Stopping Relay: operates a circuit breaker or contactor or takes equipment out of operation.

SU Suicide (Neutralizing) Contactor or Relay: initiates circuit conditions to reconnect the field circuit of a machine, usually across the output terminals, to reduce the output voltage to a minimum value and neutralize the residual flux of the machine.

TEN Tension Contactor or Relay: initiates a sequence to operate a machine or equipment to maintain tension of the material in a process line.

TH Thread Contactor or Relay: initiates circuit conditions to accelerate a machine to a reduced operating speed to thread or engage the material being processed prior to normal operation.

TIL Tilt Contactor or Relay: initiates circuit conditions to operate a machine to perform a "tilt" operation.

TQ Torque Contactor or Relay: initiates a sequence to operate a machine to maintain torque.

TR Time-Delay Relay: provides a time delay between operations in an automatic sequence.

TSW Transfer (or Selector) Switch: a manually operated device that transfers control or power circuits to change the operation of the switching equipment or devices.

U Up Contactor or Relay: initiates circuit conditions to operate a machine to give mechanical motion in the "up" direction.

UC Undercurrent (Underpower) Relay: functions at a given minimum current (underpower).

UCL Unclamp Contactor or Relay: initiates circuit conditions to operate a machine to perform an "unclamp" operation.

US Underspeed Relay: functions when the machine speed falls below a desired value.

UV Undervoltage Relay: functions on a reduction or failure of direct-current voltage or single-phase alternating-current voltage.

V Voltage relay: functions at a given voltage.

VLV Electrically Operated Valve: a solenoid or motor-operated valve in a vacuum, air, oil, or water line, etc., or one used for braking purposes.

9.7.2.3.1 Miscellaneous Designations. On diagrams it is necessary to identify various control components in accordance with their type regardless of function. Such designations, as well as suffixes and subscripts, shall be in accordance with the following:

a. Miscellaneous Device Designations.

AH	Antihunt or stabilizing transformer or device
ASX	Armature saturable reactor
C or Cap	Capacitor
CS	Control switch (See designation ME.)
CT	Current transformer
DS	Door switch
FU	Fuse
GRD	Ground
IL	Pilot or indicating light [Always use prefix letter indicating color; e.g., RIL (red), GIL (green), etc.]
MB	Magnetic brake
PB	Pushbutton (See designation ME.)
PS	Pressure switch
PT	Potential transformer
RES	Resistor
REC	Rectifier
RH	Rheostat (See designation MRH.)
T	Transformer or autotransformer
TACH	Tachometer generator
TB	Terminal board
TS	Time switch

TT	Thermostat
X	Reactor

b. Instrument and Meter Designations.

AM	Ammeter
AMS	Ammeter transfer switch
DM	Demand meter
FM	Frequency meter
GD	Ground detecter
PFM	Power-factor meter
RAM	Recording ammeter
RDM	Recording demand meter
RTM	Recording tachometer
RVM	Recording voltmeter
TM	Time or temperature meter
TVM	Tachometer voltmeter
VAR	Varmeter
VM	Voltmeter
VMS	Voltmeter transfer switch
VARHM	Var-hour meter
WHM	Watt-hour meter
WM	Wattmeter

c. Suffixes to Denote Auxiliary Devices.

X	Auxiliary or contact
Y	Auxiliary or contact
Z	Auxiliary or contact
U	"Up" position - switch relay
D	"Down" position - switch relay
OP	"Open" position - switch relay
CL	"Close" position - switch relay
F	"Forward" position - switch relay
R	"Reverse" position - switch relay

d. Subscripts to Denote Parts of the Main Device.

B	Brake
C or Cap	Capacitor
CC	Closing coil
HC	Holding coil
L	Lower operating coil
LS	Limit switch
M	Operating motor (pilot)
SOL	Solenoid
TC	Trip coil
U	Upper operating coil
UC	Unloader coil

VLV	Valve

e. Subscripts to Denote Special Features.

A or AUTO	Automatic
C	Current
CL	Close, cold
D	Down
H	Hot, high
HR	Hand reset
IT	Inverse time
L	Low, left
M or MAN	Manual
OFF	Off
P	Potential
PM	Polarity mark
SYN	Synchronizing
T	Test, trip
TD	Time delay
TC	Time-delay closing
TO	Time-delay opening
U	Up

9.7.2.3.2 Prefix Numbers. Prefix numbers are used with (basic) device designations to distinguish two or more devices having the same function. These prefix numbers shall be selected in simple numerical order (1, 2, 3, etc.) and, if an automatic sequence is involved, these numbers shall be assigned to agree with the order of the relaying, switching, or functional sequence. For example:

a. 1A, 2A, 3A, etc., designate the first, second, third, etc., accelerating contactors. The prefix numbers identify the devices and also indicate the order in which they operate in the accelerating sequence.

b. 1STP, 2STP, 3STP, etc., designate the first, second, third, etc., stopping relays in automatic stopping sequence. The prefix numbers identify the devices and indicate the order in which the stopping sequence is initiated.

SECTION X

DRAWING RELEASE AND CONTROL

10.1 SCOPE

This section defines the requirements for the official release and control of the John F. Kennedy Space Center (KSC) engineering drawings. The documentation release process shall be used to record the official approval of engineering drawings and to obtain the authorization to reproduce, distribute, microfilm, implement, or otherwise utilize the official engineering data contained within the drawings.

10.2 DOCUMENT RELEASE AUTHORIZATION FORM

The Document Release Authorization (DRA) form (KSC Form 21-68) shall be used to document the official release of engineering drawings and to document official revisions/changes made to the drawings after their initial release. The detailed procedure for preparation of the DRA shall be in accordance with DE-P 720.

10.3 DRAWING RELEASE APPLICATION

Drawing release by DRA shall apply to the following types of drawings:

a. All drawing types specified in this document

b. Engineering orders (EO's)

c. Vendor drawings

d. Shop drawings

e. Sketches

f. Preliminary drawings

10.4 PRELIMINARY RELEASE

Engineering drawings that are incomplete shall be released only by a preliminary release. When it is deemed advisable to provide advance information prior to the completion of a drawing, the drawing may be released in a preliminary form (for example, preliminary drawings are provided for design reviews).

10.5 PRELIMINARY RELEASE MARKING

All drawings released as preliminary drawings shall be identified as such so they will be readily recognized as being incomplete. Each drawing sheet that is released as a preliminary release shall be identified in the lower right-hand corner above the title block.

The preliminary identification shall be made by indicating the level of completion and the date within a cloudlike marking.

Examples:

10.6 FINAL RELEASE

A final release shall include only those drawings that are complete and ready for implementation, procurement, or utilization in the field.

10.7 DRAWING REVISION/CHANGE RELEASE

A drawing revision/change release shall be made for drawings that have been revised or updated. A drawing revision/change release may also include EO's. Drawing revisions and EO's shall be prepared in accordance with this manual.

10.8 RELEASE RECORDS

Release records shall be recorded, maintained, and filed by the documentation center. Detailed procedures for maintaining release records of engineering drawings shall be in accordance with DE-P 520.

10.9 DRAWING CONTROL

Drawing control shall be maintained by the appropriate documentation center. When not in use, original released drawings shall be retained by the appropriate documentation center. Detailed procedures for the removal of original drawings from and their return to the documentation center shall in accordance with DE-P 520.

10.10 DUPLICATE ORIGINALS

Duplicate original drawings shall not be prepared for the purpose of maintaining duplicate records. Preparation of duplicate originals shall be for the following purposes only:

a. Establishing a new original drawing to replace an existing drawing that has become worn or is otherwise not maintainable as an original. In this case, the original from which the duplicate original was made shall be voided and destroyed by the documentation center upon verification of the duplicate original.

b. Providing a base drawing to serve as a point of departure upon which changes can be made to produce a new, uniquely identified original drawing. In this case, the original drawing and the new original drawing shall be separately maintained thereafter.

10.11 DRAWING RECORD

The drawing record shall be the official configuration of a drawing. A drawing record shall be made of all released drawings. The drawing record shall consist of microfilm in accordance with American National Standards Institute/Association for Information and Image Management (ANSI/AIIM) MS 32 or ANSI/AIIM MS 5. Current and history drawing records shall be retained by the documentation center in accordance with DE-P 520.

SECTION XI

DRAWING CHANGES AND REVISIONS

11.1 SCOPE

This section establishes the methods for making, identifying, and recording changes and revisions to John F. Kennedy Space Center (KSC) facilities engineering drawings.

11.2 CHANGE METHODS

Any changes to engineering drawings shall be recorded by Engineering Order (EO) or drawing revision. Changes made by EO's should be incorporated into the drawing when the drawing is revised. EO changes will be used as an alternate method of making drawing changes only when a revision to the drawing is not feasible.

11.2.1 CHANGES BY EO. An EO may be used to change released engineering drawings, specifications, and other types of operations and maintenance documentation. An EO shall be used to change an engineering drawing only when it is impractical to revise the drawing due to a schedule. When an Engineering Order is released, it shall become a permanent part of the drawing to which it is applicable. Any change required to correct errors on a released EO shall require the preparation of a new EO. A new EO may cancel a preceding EO in its entirety only if no other subsequent EO's are affected by the cancellation. A portion of an EO cannot be cancelled. All EO's [cancelled EO's, unused EO's (EO's not released), and incorporated EO's] must be accounted for in the drawing revision block at its next revision release.

11.2.1.1 <u>EO Format</u>. An EO shall be prepared on KSC Form 21-34 (see figure 11-1). KSC Form 21-34A (see figure 11-2) may be used for continuation sheets when necessary. Other forms of documentation may also be used as continuation sheets, including computer printouts or full-size drawing sheets (e.g., F-size drawing format). All continuation sheets shall contain the EO number and the sheet number of the EO package. Continuation sheets that are B-size through F-size drawing formats shall have the title block x-ed out and the EO number and sheet number enclosed within a box above the title block.

11.2.1.2 <u>Preparation of the Engineering Order (KSC Form 21-34)</u>. The Engineering Order form (see figure 11-1) shall be completed (utilizing black ink or drafting lead) in accordance with the following instructions.

ENGINEERING ORDER

1 ENGINEERING ORDER NO
(Prefix followed by Dwg No.)

2 SHEET OF SHEETS

3 EFFECTIVITY (Facility & Vehicle)

4 DISPOSITION OF OLD PARTS (Check one)
☐ SCRAP ☐ REWORK ☐ USE ☐ NOT APPLICABLE

5 TITLE OF DRAWING

6 REASON FOR CHANGE

7 DESCRIPTION OF CHANGE

SAMPLE

ACTION	QTY	FIND NO	MFR CODE	PART NO	DESCRIPTION	STOCK SIZE	MATERIAL SPEC

PARTS LIST

8 SIGNATURES

REQUESTER	DATE	DRAFTSMAN	DATE
STRESS	DATE	ENGINEER	DATE
CHECKER	DATE	APPROVED BY	DATE

KSC FORM 21-34 (REV 6/90) PREVIOUS EDITIONS ARE OBSOLETE

Figure 11-1. Engineering Order (KSC Form 21-34)

ENGINEERING ORDER
CONTINUATION SHEET

1 ENGINEERING ORDER NO
(Prefix followed by Dwg No.)

2 SHEET OF SHEETS

7 DESCRIPTION OF CHANGE (CONTINUATION)

SAMPLE

ACTION	QTY	FIND NO	MFR CODE	PART NO	DESCRIPTION	STOCK SIZE	MATERIAL SPEC

PARTS LIST

KSC FORM 21-34A (REV 3/90) PREVIOUS EDITIONS ARE OBSOLETE

Figure 11-2. Engineering Order Continuation Sheet (KSC Form 21-34A)

Block No.	Block Title	Instructions
1	ENGINEERING ORDER NUMBER	Obtain the EO number from the documentation center that has release authority. The EO number shall consist of the drawing number preceded by the letters "EO" and a sequence number followed by the drawing number. For example, the first EO for drawing number 79K12345 would be numbered EO1-79K12345; the second EO would be numbered EO2-79K12345, etc. Enter the EO number in block 1 of the form and on each continuation sheet of the EO.
2	SHEET___OF ___ SHEETS	Number each sheet of an EO sequentially beginning with number 1. Enter the sheet number in block 2 of the form and on each continuation sheet.
3	EFFECTIVITY	Specify the launch complex or facility and the vehicle to which it applies (e.g., LC-39, Shuttle; VPF-TDRS).
4	DISPOSITION OF OLD PARTS	

SCRAP: Check to indicate that removed parts are to be excessed.

REWORK: Check whenever any part that is existing on the documentation is to be modified or reworked and is intended to remain in use or be saved for future use.

USE: Check when all parts in the engineering document affected by the EO are to be used as is.

NOT APPLICABLE: Check when changes to the engineering documentation do not affect hardware called out in the documentation or when the changes are documentation-only changes.

5	TITLE OF DRAWING	Enter the exact title of the drawing (not including the subtitle) as it appears on the first sheet.

Block No.	Block Title	Instructions
6	REASON FOR CHANGE	Indicate the reason or purpose for the change to the drawing. This block may also include the change authorization number, if applicable, such as the Engineer Support Request (ESR) number, Problem Report (PR) number, Configuration Control Board Directive (CCBD) number, or other pertinent information that may be referred to for additional rationale or justification for the change. In addition, the program model number and baseline may also be added.
7	DESCRIPTION OF CHANGE	Provide a complete and exact description of all changes to the drawing. The change description shall be clear and concise using text and sketches. A brief summary of the changes included in the EO is recommended to precede the detailed description. The following practices shall be used for describing the changes: (a) When practical, each change in the EO shall be sequentially numbered in the order in which the areas of the drawing being changed appear in the drawing. (b) Each change location within the drawing shall be identified by sheet number and, if applicable, zone identification. (c) The drafting methods and practices used in preparing the drawing being changed shall always be followed in the EO to the maximum extent possible. (d) The WAS AND IS method may be used to define the change. The use of information enclosed in a cloudlike marking that indicates the area of the change is acceptable when appropriate.

Block No.	Block Title	Instructions
		(e) New find numbers, note numbers, or new view, elevation, section, or detail identification letters shall not be assigned in an EO. The numbers and letters shall be assigned at the time of EO incorporation into the drawing. When new numbers/ letters are required within the EO, a notation such as *1, *2, or *A, *B, etc., along with a note *ITEM NUMBER TO BE ASSIGNED AT TIME OF EO INCORPORATION shall be used.
--	PARTS LIST	(f) An abbreviated parts list shall be used to indicate changes in parts or materials required for the EO. Complete the following blocks as applicable:

ACTION	Enter ADD or SUB to add or delete the part or item.
QTY	Enter the quantity of parts that is added or deleted.
FIND NO.	Enter the find number of the part that is added or deleted.
MFR CODE	Enter the CAGE code for the part.
PART NO.	Enter the part number of the part.
DESCRIPTION	Enter a description of the part.
STOCK SIZE	Enter the stock size of the part.

Block No.	Block Title	Instructions
		MATERIAL SPEC — Enter the material specs for the part.
8	SIGNATURES	Obtain the following signatures (in black ink or drafting lead), as required, to approve the EO. (a) REQUESTOR. The name, organization and department number of the person who is requesting the change to the engineering document, and the date. (b) STRESS. If stress analysis or material analysis is required, include the signature, organization and department number of the responsible stress or materials analysis engineer, and the date. (c) CHECKER. The signature, organization and department number of the designated engineering checker for changes made to the document, and the date. (d) DRAFTSMAN. The signature of the draftsperson who drew the EO and the date. If the engineer making changes to the engineering document is the person who drew the EO, that person's name shall be printed in this block. (e) ENGINEER. The signature, organization and department number of the engineer who requested the EO from the documentation center and who is responsible for the content of the EO, and the date. Additionally, if an in-house tracking number is used, it may be placed on the EO in this block only. (f) APPROVED BY. The signature, organization and department number of the approving management, and the date.

11.2.1.3 Preparation of the Engineering Order Continuation Sheet (KSC Form 21-34A). The Engineering Order Continuation Sheet (see figure 11-2) shall be completed in accordance with the following instructions (using black ink or drafting lead).

Block No.	Block Title	Instructions
1	ENGINEERING ORDER NO.	Enter the EO number followed by the drawing number (e.g., EO1-79K12345).
2	SHEET__OF__SHEETS	Enter the sheet number and total number of sheets in the EO (e.g., sheet 2 of 6 sheets).
7	DESCRIPTION OF CHANGE (CONTINUATION)	Enter a continuation of change description.
--	PARTS LIST	Use the parts list to continue changes in parts or materials. The parts list shall be completed in the same manner as KSC Form 21-34.

11.3 REVISION METHODS

Revisions shall be made by erasure, addition of information, or by redrawing. The "crossing-out" method of revision shall not be used.

11.3.1 REVISION DRAWING PRACTICES. When revising an existing drawing, the graphic symbols, designations, lettering style and size, material and method of application, and drawing practices used in creating the original drawing shall be followed for changes/revisions, unless otherwise directed by the responsible design organization.

11.3.2 CHANGE IN DIMENSIONS. In general, any change in a dimension of a part shall also be made to scale on the affected portion of the drawing; however, it is permissible to leave the drawing unchanged when the new portion of the part is not noticeably different from the original.

11.4 RECORDING REVISIONS ON DRAWINGS

Each revision shall be recorded in the revision block of the drawing at the time the drawing is revised. The revision block format on facilities drawings shall be as identified in section II. To provide for future revisions, the space above the revision block shall be left blank on the initial release of the drawing. On D-size and larger drawing formats, a minimum of 90 millimeters (3.5 inches) of blank space should be provided above the revision block on the format. Instructions for completing the revision block are contained in the following paragraphs (see figure 11-3).

SYM.	ZONE	DESCRIPTION	DATE	APPROVED
T		THIS SHEET ADDED WAS SHEET 6		
P	A-5 B-3 C-4	1. ADDED DETAIL D 2. DELETED SECTION B 3. INC EO 3		
N		WAS SHEET 8A		
L		OBSOLETE		
J		CANCELLED AND SUPERSEDED BY 79KXXXXX		
G		THIS SHEET ADDED PER EO 2		
E		REVISED AND REDRAWN IN ITS ENTIRETY		
C		REDRAWN NO CHANGE		
A	B-5 D-8 E-8	INC EO 1 THRU EO 4 AND EO 7 EO 5 UNUSED EO 6 CANCELLED REVISED SH 1, 3, 5, & 7 ADDED SH 4A, 8 & 9 DELETED SH 3A 1. SH NO. WAS 1 OF 7 2. INC EO 1 & 3 THIS SHEET 3. UPDATED REV STATUS 4. ADDED ITEMS 36 & 37 5. DELETED NOTE 10 6. REVISED NOTE 2		

REVISIONS

Figure 11-3. Examples of Typical Revision Recordings

11.4.1 ZONE. When changes are recorded by zoning, the zone in which each change is made shall be entered in the ZONE column on the same line as the description of the change.

11.4.2 REVISION LETTER. The identifying letter pertaining to the particular revision being recorded shall be entered in the SYM column.

11.4.3 DESCRIPTION. A brief description of each individual change made to the particular revision shall be identified and sequentially numbered in the DESCRIPTION column. Reference to a revision authorization document shall not be required in the description. Pictorial sketches and symbology shall not be used. EO incorporation and information on added, deleted, or renumbered sheets shall be indicated in the DESCRIPTION column on the sheet where it occurs and repeated in the DESCRIPTION column on the first sheet of the drawing. (See figure 11-3.)

11.4.4 REVISION DATE. The method of specifying the revision date should be numerical by month-day-year.

11.4.5 APPROVAL. The approval of the revision shall be indicated by the initials or the signature of the authorized design organization representative entered in the APPROVAL column. CAD-prepared drawings shall be signed for each revision. Subsequent revisions of CAD-prepared drawings shall show printed initials/names in place of the original signatures on previous revisions.

11.4.6 SEPARATING REVISIONS. Each revision shall be separated from the next revision by a horizontal line.

11.4.7 REVISION ERASURE. Previous revision block information shall not be erased by subsequent revisions unless the revision block recordings interfere with the delineations in the field of the drawing. When the previous revision blocks interfere with the delineations, they may be erased if specifically authorized by the responsible Government design organization. The first sheet shall still retain the revision entry of every revision to provide a history of past revisions.

11.5 REVISION IDENTIFICATION

Revisions of drawings shall be designated by letters alphabetically. The locations of the revisions on the drawing shall be identified through the use of revision symbols in the field of the drawing and a description in the revision block on the drawing. The revised area of the drawing shall be enclosed within a cloudlike marking when special emphasis is required.

11.5.1 REVISION LETTERS. Uppercase letters shall be used in alphabetical order, excluding the letters I, O, Q, and X, to identify each sequential revision to a drawing. When revisions to the drawing are numerous enough to exhaust the alphabet, the revision following Z shall be identified as AA, AB, AC, etc., excluding the letters I, O, Q, and X. If the AA to AZ sequence

should be exhausted, the next sequence shall be BA, BB, BC, etc. (omitting I, O, Q, and X). The release (initial issue) of a drawing shall not be assigned a revision letter. Letters shall not be skipped in the applicable revision letter sequence.

When multiple changes are incorporated in a drawing at the same time, all of the changes shall be identified by the same revision letter. The changes shall be sequentially numbered to permit ready identification of each specific change. In such cases, the appropriate sequence number will appear as a suffix to the revision letter in the revision symbol (see figure 11-4) and be identified in the description in the revision block of the drawing.

Figure 11-4. Revision Symbol

11.5.2 REVISION SYMBOLS. A revision symbol shall consist of the applicable revision letter and a change suffix number (when required) enclosed in a triangle (see figure 11-4). Revision symbols shall be located as near as practical to the change in the field of the drawing. Revision symbols shall not be used on printed-wiring drawings or on other types of drawings when their use may adversely affect clarity. When multiple changes are involved in one area of a drawing to the extent that use of separate revision symbols would crowd the drawing, a single revision symbol may be used to identify the changes, provided sufficient information is included in the revision block. For each subsequent revision, the previous revision symbols may be removed from the field of the drawing.

11.6 REVISION OF MULTIPLE-SHEET DRAWINGS

Concurrent changes made upon any or all sheets of a multiple-sheet drawing shall be identified on each sheet revised by the same revision letter. Each sheet revised by a specific revision shall be indicated in the revision block on sheet 1 of the multiple-sheet drawing (see figure 11-3). The revision status shall also be indicated on the drawing index or revision status summary. (See figure 11-5.) The revision status shall be provided on the first sheet or the index sheet of a drawing.

A revision to any sheet requires an upgrade in the revision level of that sheet and sheet 1; therefore, the revision of sheet 1 represents the revision level of the entire multiple-sheet drawing. No sheet shall contain a revision level higher than that shown for sheet 1.

11.6.1 ADDING SHEETS. Added sheets constitute a change to the drawing. This revision shall be entered both on the added sheet and on sheet 1.

11.6.1.1 Inserting New Sheets. Additional sheets inserted between existing sheets shall not require the renumbering of all subsequent sheets, which would require revising sheets with

DRAWING INDEX			
SHEET	FUNC. CODE	REV.	SHEET TITLE
1	V	A	COVER SHEET
2	V	A	INDEX
3	V		VICINITY MAP
4	V	A	PROJECT SITE PLAN
5	V		GENERAL NOTES
6	V	A	PLAN - LC-39 PAD B
7	V	A	EXISTING PLAN EL 83'-0"
8	V	A	
9	V		MODIFIED PLAN EL 83'-0"
10	V	A	GENERAL ARRANGEMENT SIDE 1-2
11	V		GENERAL ARRANGEMENT SIDE 3-4
12	V		GENERAL ARRANGEMENT PLAN EL 100', 120'
13	S		ROOF PLAN
14	S		INTERIOR ELEVATIONS
15	S	A	FLOOR PLAN
16	S	A	INSULATION METAL PANEL
17	S	A	ELEVATOR - GENERAL
17A	S	A	ELEVATOR - SECTIONS, DETAILS
18	S	A	STRUCTURAL ELEVATIONS
19	S		STRUCTURAL PLANS
20	S		CONNECTION DETAILS
21	S		FRAMING COLUMN LINE A
22	S		FRAMING COLUMN LINE B

A1

Figure 11-5. Revision Status

interconnect ballouts or cross-reference of details, sections, etc. The added sheet shall be numbered the same as the previous sheet number with the addition of the letter A (e.g., 26A). If additional added sheets immediately follow an added sheet, they shall also be numbered by adding letters alphabetically to the previous sheet number (e.g., 26B, 26C, etc.). If additional sheets are inserted between previously added sheets (e.g., between 26A and 26B), new sheets shall be numbered with the same alphanumeric sheet number as the previous page with the addition of numbers in consecutive order (e.g., 26A, 26A1, 26A2, etc.). Sheet number lettering shall comply with the same practices specified for revision letters in 11.5.1 (the letters I, O, Q, and X shall not be used). The sheet number recordings on the first and last sheets of the drawing shall remain unchanged. The title block of a new sheet shall reflect the date the new sheet was approved and new signatures, in accordance with section II. The revision description on the new page should read THIS SHEET ADDED or THIS SHEET ADDED PER EO-XX, as appropriate. For example (see figure 11-6), a 5-sheet drawing package has a sheet 2A inserted. Sheet 1 reads SHEET 1 OF 5 and sheet 5 reads SHEET 5 OF 5, even though the total number of sheets is 6. The revision description on sheet 2A reads THIS SHEET ADDED.

11.6.1.2 Adding Sheets to the End. Additional sheets added to the end of the drawing shall be assigned the next consecutive sheet number, without alpha letters, for each added sheet. The sheet number recordings on the first and last sheets of the drawing shall then be changed to reflect the first sheet and the new last sheet number, not the total number of sheets. The revision description of the new last sheet should read THIS SHEET ADDED or THIS SHEET ADDED PER EO-XX, as appropriate. The title block of a new sheet shall reflect the date the new sheet was approved and new signatures, in accordance with section II. For example (see figure 11-7), a 5-sheet drawing package has sheet 6 added to the end. Sheet 1 reads SHEET 1 OF 6, sheet 5 reads SHEET 5, and the new last sheet reads SHEET 6 OF 6. The revision description of sheet 6 reads THIS SHEET ADDED.

11.6.1.3 Inserting New Sheets and Renumbering. If one or more sheets are inserted and the entire drawing package renumbered, including alphanumeric sheets, the sheet numbers on the first and last sheets are changed to reflect the total sheet count (see 11.6.1.2). The title block of a new sheet shall reflect new signatures and the date the information on the new sheet was approved, in accordance with section II. The revision description on the new sheet should reflect the new revision level and the description REDRAWN, NEW INFO. All subsequent sheets through the former last sheet number should reflect the new revision level with the revision description reading REDRAWN, INFO WAS ON SHEET X. All information (drawing details, title block, revision data, etc.) on each subsequent renumbered sheet shall remain intact with only the sheet number being changed. The existing sheets that become sheets beyond the former last sheet number become added sheets with the revision description reading THIS SHEET ADDED, INFO WAS ON SHEET X. Any sheets with interconnect ballouts between sheets or details, sections, views, etc., between sheets, will be affected and shall be revised. For example (see figure 11-8), a 5-sheet drawing package has a sheet added between sheets 2 and 3 and is renumbered. Sheet 1 reads SHEET 1 OF 6. The new sheet

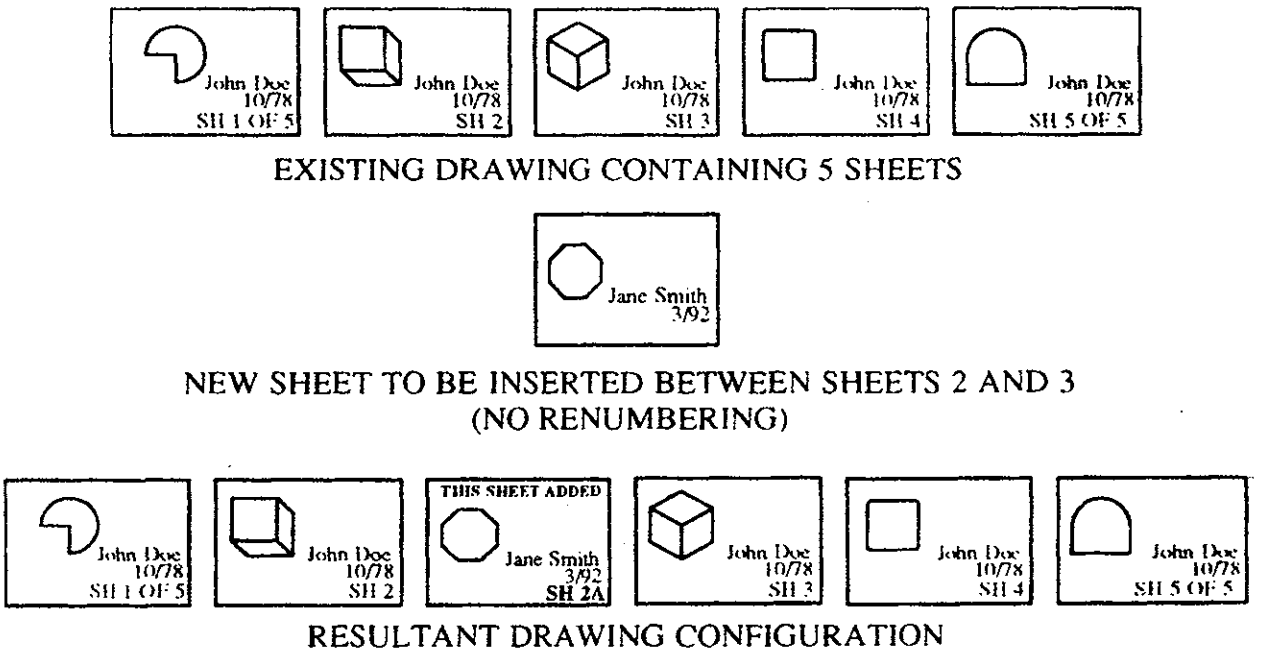

Figure 11-6. Insertion of a New Sheet

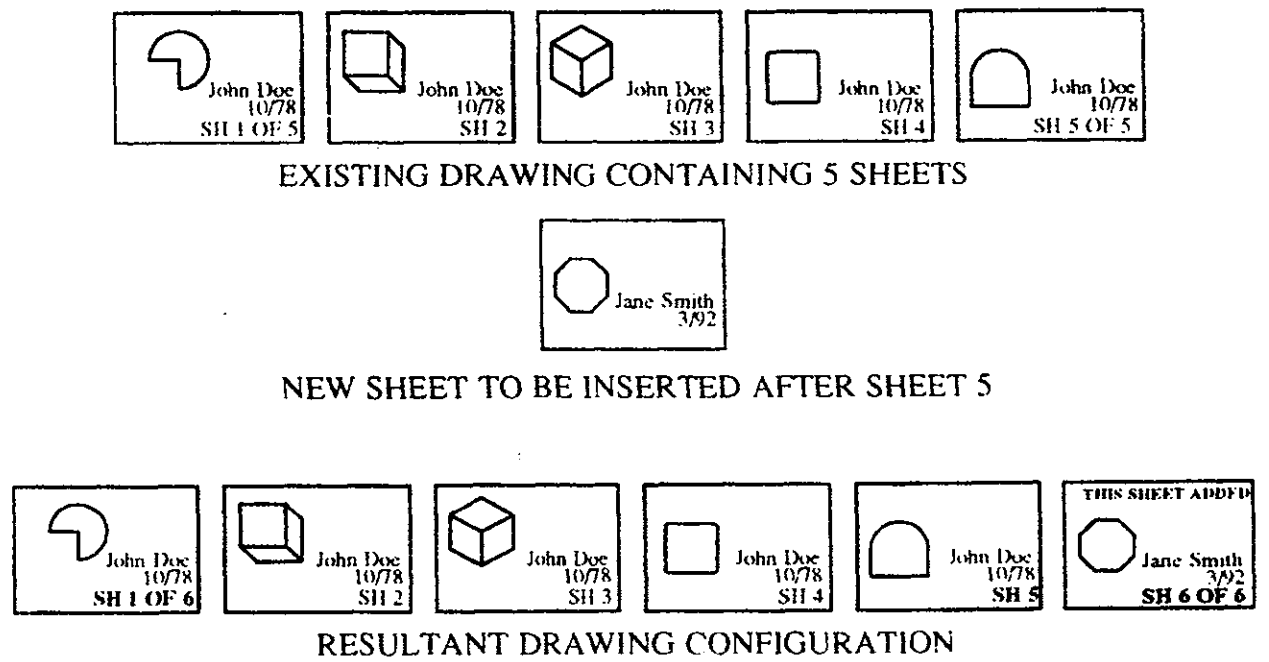

Figure 11-7. New Sheet Added to End of Drawing

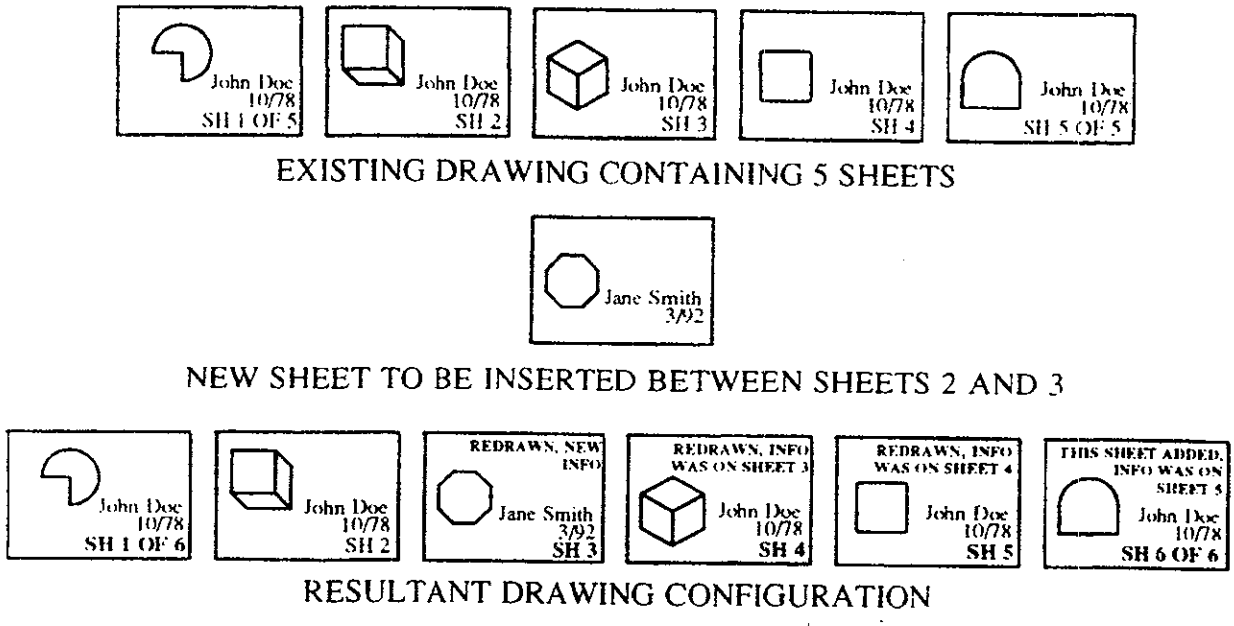

Figure 11-8. Insertion of a New Sheet With the Drawing Renumbered

receives new dates and approval signatures and becomes the new sheet 3 with the revision description reading REDRAWN, NEW INFO. The former sheet 3, in its entirety, becomes the new sheet 4 with the revision description reading REDRAWN, INFO WAS ON SHEET 3. Similarly, the former sheet 4 becomes the revised sheet 5, with sheet 5 now reading only SHEET 5. The former sheet 5, including the original signatures, is then added as a new sheet reading SHEET 6 OF 6 with the revision description reading THIS SHEET ADDED, INFO WAS ON SHEET 5.

11.6.2 DELETING SHEETS. When sheets are deleted, the remaining sheets should be renumbered to retain the sequential order. The revision level of sheet 1 and each sheet that is renumbered shall be upgraded to the next revision level. Renumbering may be avoided by revising and redrawing the sheet to be deleted, removing all information in the field of the drawing, and inserting the words THIS SHEET INTENTIONALLY LEFT BLANK in the appropriate size lettering. When sheets are deleted, the word VOID shall be added to the original sheet above the title block, signed and dated by the responsible organization representative, and submitted to the documentation center with the revised sheets of the drawing.

11.6.3 REARRANGING SHEETS. Rearranging sheets within a drawing shall constitute a revision to the drawing. The revision shall be entered on both the rearranged sheet and on sheet 1 of the drawing. Rearrangement of the sheets shall be accomplished by renumbering the sheets. When the sheets are renumbered, the old sheet number shall be indicated in the revision block. (See figure 11-3.) Sheets that are rearranged between existing sheets or at the end of the drawing shall be added sheets in accordance with 11.6.1.

11.7 CANCELLED DRAWINGS

When drawings are cancelled, they shall be revised to the next higher revision level. The revision block shall be marked CANCELLED AND REPLACED BY 79K _____ or marked CANCELLED AND SUPERSEDED BY 79K _____ (see figure 11-3). The cancelled drawing shall be approved and released at the same time or after the new drawing is released. Cancelled multiple-sheet drawings shall have only the first sheet revised and released. Sheets other than the first sheet shall be voided by adding the word VOID above the title block, signed and dated by the responsible organization representative, and submitted to the documentation center with the revised sheets of the drawing. All outstanding EO's of a cancelled drawing shall be incorporated into the cancelling revision and the reserved EO's cancelled by the documentation center on the CMDS.

11.8 OBSOLETE DRAWINGS

When drawings are classified as obsolete, they shall be revised to the next higher revision level. The revision block shall be marked OBSOLETE (as shown in figure 11-3), approved, and released. Obsolete multiple-sheet drawings shall have only the first sheet revised and released. Sheets other than the first sheet shall be voided by adding the word VOID above the title block, signed and dated by the responsible organization representative, and submitted to the documentation center with the revised sheets of the drawing. All outstanding EO's of an obsolete drawing shall be incorporated into the obsoleting revision and the reserved EO's cancelled by the documentation center on the CMDS.

11.9 REDRAWN OR REPLOTTED DRAWINGS

Drawings that are redrawn by manual, CAD, or photoreproduction methods shall be revised to the next higher revision with the appropriate information indicated in the revision block, approved, and released. The revision blocks on manually and photographically reproduced drawings shall be marked REDRAWN NO CHANGE (as indicated in figure 11-3) or REPLOTTED NO CHANGE. It is not required to indicate REVISED AND REDRAWN in the revision block on CAD-revised drawings, however, the changes made by the revision shall be indicated. The original drawing sheets replaced by the redrawn or replotted sheets shall be marked VOID above the title block and signed by the responsible organization. All voided drawing sheets shall accompany their revised sheets to the documentation center when the revised sheets are released.

11.10 REINSTATING A CANCELLED/OBSOLETE DRAWING

Reinstating a cancelled or obsolete drawing shall require the preparation and release of a new drawing with a new drawing number or the release of the same drawing number at a higher revision.

11.11 DOCUMENTATION FILES

Documentation files for drawing changes and revisions shall be maintained by the documentation centers. The latest released drawing revisions and all outstanding EO's shall be maintained in an active microfilm file.

Microfilm for incorporated EO's, previous revisions, and cancelled or obsolete drawings (except for sheet 1) shall be marked HISTORY and maintained in a history microfilm file.