MSFC-STD-156
April 2, 1962

N

GEORGE C. MARSHALL SPACE FLIGHT CENTER

NATIONAL AERONAUTICS AND SPACE ADMINISTRATION

HUNTSVILLE, ALABAMA

RIVETING, FABRICATION AND INSPECTION, STANDARD FOR

CONTENTS

Paragraph		Page
1.	SCOPE	1
1.1	Scope	1
1.2	Application	1
2.	APPLICABLE DOCUMENTS	1
2.1	Government	1
2.2	Other publications	2
3.	DEFINITIONS	2
3.1	Rivet	2
3.2	Pilot hole	2
3.3	Final hole	2
3.4	Draw dimpling	2
3.5	Erco dimpling	3
3.6	Ram coin dimpling	3
4.	GENERAL REQUIREMENTS	3
4.1	Rivet symbols	3
4.2	Cleaning	3
4.2.1	Deburring	3
4.2.2	Corrosion protection	3
4.3	Rivet size	3
4.4	Dimpling	3
4.4.1	Coin dimpling	3
4.4.2	Draw dimpling	4

CONTENTS (cont'd)

Paragraph		Page
4.5	Hole positioning	4
4.6	General repair	4
4.6.1	Oversize holes	4
4.6.2	Supervision of repair	5
4.6.3	Standard repair records	5
4.6.4	Defective rivets and rivet holes	5
4.7	Deviations	5
5.	DETAIL REQUIREMENTS	5
5.1	Installation of MS20600, MS20601 and Huck including Conical Keystone Locking (CKL) fasteners	5
5.1.1	Drilling of holes	5
5.1.2	Driving the blind fasteners conforming to MS20600 or MS20601 and CKL	7
5.1.3	Inspection of blind fasteners conforming to Standard MS20600 or MS20601	7
5.1.4	Removal of blind fasteners conforming to Standard MS20600 or MS20601	9
5.1.5	Inspection of Huck CKL blind fasteners	9
5.2	Installation of explosive blind fasteners (Standard MS20602 or MS20603).	10
5.2.1	Precautions	10
5.2.2	Drilling of holes	11
5.2.3	Driving procedure	11
5.2.4	Use of installation tools	16

CONTENTS (cont'd)

Paragraph		Page
5.2.5	Inspection of explosive blind fasteners	17
5.3	Installation of hi-shear rivets	17
5.3.1	Drilling of holes	17
5.3.2	Hi-shear collars	19
5.3.3	Installation	19
5.3.4	Removal methods for hi-shear rivets	20
5.3.5	Inspection of hi-shear rivets	25
5.4	Installation of solid rivets	27
5.4.1	Drilling of holes	27
5.4.2	Countersinking	30
5.4.3	Rivet driving	31
5.4.4	Inspection of standard solid rivets	33
5.5	Tubular rivets (Standard MS20450 and similar)	36
5.5.1	Hole size	36
5.5.2	Installation	37
5.5.3	General inspection	37
5.6	Lockbolts - pull type and stump type	38
5.6.1	Hole size	38
5.6.2	Installation	38
5.6.3	General inspection	48
5.7	Pull fasteners	50
5.7.1	Use of installation tools	50

CONTENTS (cont'd)

Paragraph		Page
5.7.2	Trim of self-plugging pull rivets	50
5.7.3	Tapping or hitting heads	50
5.7.4	Inspection of pull fasteners	50
5.8	Installation of Deutsch drivepins	54
5.8.1	Sheet preparation	54
5.8.2	Machine countersinking	54
5.8.3	Driving the rivets	54
5.8.4	Inspection	54
5.8.5	Removal of rivets	55
5.9	Skin deformation	58
5.10	Countersinking	58
5.10.1	Hi-shear rivet	58
5.10.2	Nominal diameters for countersinks	58

CONTENTS (cont'd)

Figure		Page
1	Acceptable blind fasteners conforming to Standard MS20600 or MS20601	8
2	Rejectable blind fasteners conforming to Standard MS20600 or MS20601	8
3	Stem pull-in	9
4	Huck CKL blind fasteners allowable tolerance after assembly	10
5	Use of installation tools	16
6	DuPont explosive blind fastener - acceptable blind head	17
7	Barrel-shaped end	17
8	Pin and collar limits	20
9	Drill-out bushing	21
10	Drill-out of pin	21
11	Pin removal	21
12	Guide punch and punch position	22
13	Punch to pin	22
14	Rivet back through collar	23
15	Hollow mill and drill	23
16	Hollow mill to pin	24
17	Driving out pin and collar	24
18	Chisel method	25
19	Good rivet	26
20	Slightly ragged, broken collar edge	26

CONTENTS (cont'd)

Figure		Page
21	Collar slightly overdriven	27
22	Shoulder at base of collar	27
23	Upset rivet head dimensions	29
24	Out-of-round driven heads	34
25	Deformed driven heads	35
26	Not acceptable driven rivets	35
27	Installation of pull-type lockbolts	39
28	Driving the stump-type lockbolt	47
29	Pin protrusion	48
30	Installation of pull rivets	52
31	Trim of self-plugging pull rivets	52
32	Tulip shaped end	53
33	Trimming of stem	53
34	Acceptability limits	55
35	Removing rivets from thru holes	55
36	Removing rivet from blind holes	57
37	Alternate method for removing blind rivets	58

CONTENTS (cont'd)

Table		Page
I	Sheet thickness for dimpling	4
II	MS20600 or MS20601 fastener drill and hole sizes	6
III	Huck Keystone blind fastener (CKL) drill size and diameter limits	6
IV	Explosive blind fastener drill sizes and hole limits	11
V	Heat controlled setting for heated tips	12
VI	Recommended settings for precision fastener machine using aluminum alloy 2017 standard and blast-free fasteners	13
VII	Recommended settings for precision fastener machine using aluminum alloy 2017 standard and blast-free fasteners	14
VIII	Recommended settings for precision fastener machine using nickel blast-free fasteners	15
IX	Hole sizes for structural design (hi-shear BB351 and BB352)	18
X	Hi-shear rivet hole sizes	18
XI	Dimple hole sizes - hi-shear rivets	19
XII	Pin projection - hi-shear rivets	26
XIII	Rivet hole size and hole tolerances for Standard MS20426 or MS20470 type rivets	28
XIV	Upset head dimensions	30
XV	Minimum flattened dimension of manufactured rivet heads (Standard MS20470 universal head rivets)	31
XVI	Maximum diameter - Erco punched holes	33
XVII	Maximum allowable height of pin mark	33

CONTENTS (cont'd)

Table		Page
XVIII	Rivet shaver cutter diameters	36
XIX	Checking dimensions - rivet shaving	37
XX	Lockbolts - recommended drill size (and collars)	40
XXI	Gaging dimensions - pull-type lockbolts	49
XXII	Gaging dimensions - lockbolt stumps	51
XXIII	Recommended inspection gages for pull-type lockbolts	51
XXIV	Hole sizes - Deutsch drive pins	54
XXV	Hole preparation data for the installation of shear rivets using NAS179 collars	59
XXVI	Hole preparation data for the installation of HS25, HS26 rivets using HS24 and HS25 collars	60
XXVII	Hole preparation data for the installation of HS51P and HS52P rivets using HS15 and HS53 collars	60
XXVIII	Nominal diameter for countersinks	61

GEORGE C. MARSHALL SPACE FLIGHT CENTER

NATIONAL AERONAUTICS AND SPACE ADMINISTRATION

HUNTSVILLE, ALABAMA

RIVETING, FABRICATING AND INSPECTION, STANDARD FOR

1. SCOPE

1.1 Scope. - This standard establishes the requirements for fabrication and inspection of rivets and fasteners and the procedures for riveting operations.

1.2 Application. - When applicable, the requirements specified herein are to be utilized on design drawings. In the event of conflict between the requirements of this standard and the drawing, the latter shall govern.

2. APPLICABLE DOCUMENTS

2.1 The following documents, of the issue in effect on date of invitation for bids, form a part of this standard to the extent specified herein.

SPECIFICATIONS

Military

MIL-P-8585	Primer Coating, Zinc Chromate, Low Moisture-Sensitivity.
MIL-A-8625	Anodic Coatings, for Aluminum and Aluminum Alloys.

STANDARDS

Military

MS20426	Rivet, Solid, Countersunk 100 Degree Precision Head, Aluminum Alloy.
MS20470	Rivet, Universal Head, Aluminum Head.

MS20600	Rivet, Blind, Structural Pull Seam, Self-Plugging, Protruding Head, Type II, Class 2.
MS20601	Rivet, Blind, Self-Plugging, 100 Degree Flush Head, Type II, Class 2.
MS20602	Rivet, Blind, Chemically Expanded, Protruding Head, Type I, Class 2, Style A and B.
MS20603	Rivet, Blind, Chemically Expanded, 100 Degree Flush Head, Type I, Class 2, Style A and B.

(Copies of specifications, standards, drawings and publications required by contractors in connection with specific procurement functions should be obtained from the procuring activity or as directed by the contracting officer.)

2.2 Other publications. - The following documents form a part of this standard to the extent specified herein. Unless otherwise indicated, the issue in effect on date of invitation for bids shall apply.

Aerospace Industries Association of America

NAS523	Rivet Code

(Application for copies should be addressed to Aerospace Industries Association of America, National Aircraft Standards, 610 Shoreham Building, Washington 5, D. C.)

3. DEFINITIONS

3.1 Rivet. - A rivet is defined as including types of fasteners in which the installation thereof imparts a permanent deformation which would require the destruction of the fastener to permit removal.

3.2 Pilot hole. - A hole slightly smaller in diameter than the diameter of the fastener hole.

3.3 Final hole. - Final hole is a hole of the diameter required for the installation of the rivet.

3.4 Draw dimpling. - Dimpling formed by using rivet, rivet gun and bucking bar to form a dimple into a subcountersink.

3.5 Erco dimpling. - Dimpling formed with an Erco automatic punch and riveting machine to form a dimple of the radius type. The two members are formed simultaneously during the punch and dimple cycle of the machine. During the second cycle of the machine, the rivet is automatically installed and driven.

3.6 Ram coin dimpling. - Dimpling formed by using a one-piece punch and a two-piece female die assembly, the female die consisting of two main die parts, a die body and a coining ram. This type of dimpling can be done either hot or cold.

4. GENERAL REQUIREMENTS

4.1 Rivet symbols. - Rivet coding symbols shall be in accordance with National Aircraft Standards Committee's Publication NAS523.

4.2 Cleaning. - Before joining parts by rivets, the faying surfaces shall be free from chips, burrs, and other foreign material. Chamfering for burr removal shall be permitted to a maximum of 10 percent of sheet thickness or 0.032-inch, whichever is less.

4.2.1 Deburring. - A flat deburring block or other suitable tool shall be used to remove chips and burrs from thin members. Extreme care shall be used on clad or plated surfaces to prevent scratches, nicks, gouges or drill marks.

4.2.2 Corrosion protection.

4.2.2.1 Priming. - Immediately prior to the installation of rivets, the bare areas of the hole, countersink, or spot-face, shall be coated with primer conforming to Specification MIL-P-8585, except where riveting is on the interior surface of the liquid oxygen, fuel or pneumatic systems.

4.3 Rivet size. - The nominal diameter of the rivet shank shall be not less than the thickest member through which the rivet is to be driven, nor greater than three times the thickness of the thinnest member.

4.4 Dimpling. - In flush riveting, both sheets to be joined by rivets shall be dimpled when thickness of each sheet is within the limits specified in table I.

4.4.1 Coin dimpling. - Coin dimpling (see 3.6) shall be used whenever possible. All parts to be riveted shall be dimpled separately with the following exceptions:

(a) Cemented parts: Parts cemented together with a joined thickness not exceeding the maximum thickness for dimpling.

(b) Spot or seam welded: Parts spot or seam welded with a joint thickness not exceeding the maximum thickness for dimpling.

Table I. Sheet thickness for dimpling

Rivet size	Sheet thickness	
	Min.	Max.
3/32	0.016	0.051
1/8	0.016	0.064
5/32	0.016	0.072
3/16	0.016	0.091
1/4	0.016	0.125
5/16	0.016	0.156
3/8	0.016	0.188

NOTE: All dimensions in inches.

4.4.2 Draw dimpling. - Draw dimpling shall not be performed without written approval of the procuring activity.

4.5 Hole positioning. - Holes for rivets shall be prepared so that the manufactured heads are on the near side.

4.6 General repair.

4.6.1 Oversize holes. - Provided that the edge margin is 1.5d and the center-to-center position is 3d, oversize holes shall be acceptable with the following exceptions:

(a) Damaged holes: The largest dimension of the damaged hole shall be not greater than the maximum allowable diameter for the next larger size rivet.

(b) Oversize countersinking: When countersinks are oversize, and the skin thickness will permit the use of a larger rivet.

4.6.1.1 When the edge margin and center-to-center distances can not be met, the design agency responsible shall be contacted for repair instructions.

4.6.2 Supervision of repair. - Oversize hole and countersinks shall be reworked to meet the requirements of the next larger size rivet. All repairs shall be made under cognizance of the shop supervisor and the inspection supervisor. The repaired area shall be inspected by and acceptable to the Quality Assurance Division representative.

4.6.3 Standard repair record. - Standard repairs shall be noted on the repair record sheet, including quantity and exact location.

4.6.4 Defective rivets and rivet holes.

4.6.4.1 Standard repair. - When 3/32, 1/8, 5/32, or 3/16-inch diameter rivet holes are enlarged beyond the specified tolerances, the next larger diameter rivet may be used. This repair shall be limited to a maximum of 20 percent of the rivets in a single rivet pattern. Repairs to more than two adjacent rivets or to more than half the rivets in any 10-inch pattern shall not be allowed.

4.7 Deviations. - The grip length may be varied plus or minus 1 size from that specified on the drawing. Any other deviations shall require an engineering order, waiver or design approval.

5. DETAIL REQUIREMENTS

5.1 Installation of MS20600, MS20601 and Huck including Conical Keystone Locking (CKL) fasteners.

5.1.1 Drilling of holes. - The holes shall be round and within the diameter limits specified. The driven fastener shall be expanded to completely fill the hole. An overfilled hole may cause lengthening of the sleeve toward the manufactured head, resulting in a separation of the sheets being fastened, or in clearance between the manufactured head and the sheets. In final drilling the hole shall be held to the diameter limits specified in tables II and III.

5.1.1.1 Drill press. - A drill press shall be used when possible to obtain the best holes. The pilot drill hole size may be found to be too large when free hand drilling is used.

5.1.1.2 Pilot-drill. - A drill slightly smaller in diameter than the desired fastener hole shall be used. See tables II and III for pilot-drill sizes recommended for use in the drill press. For free hand drilling, smaller pilot-drill sizes will be necessary.

Table II. MS20600 or MS20601 fastener drill and hole sizes

Nom. fastener diameter	Fastener shank dia.	Pilot drill	Finish drill	Hole dia.	
				Min.	Max.
3/32	0.094 +.003 -.001	#45	#40	0.097	0.101
1/8	0.125 +.003 -.001	#32	#30	0.128	0.132
5/32	0.156 +.003 -.001	#26	#20	0.160	0.164
3/16	0.188 +.003 -.001	#16	#10	0.192	0.196
7/32	0.219 +.003 -.001	# 4	# 2	0.221	0.225
1/4	0.250 +.003 -.001	# D	# F	0.257	0.261
9/32	0.281 +.003 -.001	# J	# L	0.289	0.295
1/8 oversize	+.009 to .016	#32	#29	0.137	0.141
5/32 oversize	+.009 to .016	#26	#16	0.177	0.181
3/16 oversize	+.009 to .016	#16	# 5	0.206	0.210

NOTE: Dimensions shown are in inches.

Table III. Huck Keystone blind fastener (CKL) drill size and diameter limits

Fastener dia.	Suggested max. pilot drill*	Suggested finish drill*	Hole dia. limit	
			Min.	Max.
1/8	#32 drill (0.116)	#30 drill (0.128)	0.128	0.132
5/32	#26 drill (0.147)	#21 drill (0.159)	0.159	0.1635
3/16	#16 drill (0.177)	#11 drill (0.191)	0.191	0.196

NOTE: All dimensions are in inches.
*The shop may use any size provided the final holes agree with tolerance range of the last column.

5.1.1.3 Finish drill. - See tables II and III for finish drill sizes recommended for use in the drill press.

5.1.1.4 Clamping sheets. - Sheets shall be suitably clamped together while drilling to prevent metal chips or slivers from lodging between the surfaces. Thin sheets must be backed by a firm support to prevent sheet separation during drilling operation. Clamping shall be in accordance with an approved Marshall Space Flight Center method.

5.1.1.5 Removal of burrs. - Burrs remaining on surfaces adjacent to the holes after drilling operation shall be removed before installation of rivets.

5.1.1.6 Dimpling. - When dimpling is specified, pilot holes shall be drilled prior to dimpling. After dimpling, the holes shall be redrilled to within the hole diameter limits specified in tables II and III.

5.1.2 Driving the blind fasteners conforming to Standard MS20600 or MS20601 and CKL. - The riveting procedure shall be as follows:

(a) The sheets shall be held firmly together.

(b) The head of the rivet shall be held firmly against the material being fastened during installation with pneumatic or hand pull.

(c) The stem of self-plugging blind rivets conforming to Standard MS20600 or MS20601 shall be trimmed with powered micro-shavers or manual pintail clippers. Projection of 0.03-inch is satisfactory except where this would not meet flushness requirements or would cause interference with faying parts.

(d) Sharp projections remaining after the stem trimming operation shall be removed from all rivets.

5.1.3 Inspection of blind fasteners conforming to Standard MS20600 or MS20601.

5.1.3.1 Head seating. - Rivet heads shall be inspected for adequate seating of the head. Maximum clearance acceptable under the rivet head on any one side is 0.001-inch. The rivet head may rise slightly in the area which was under the slot of the pulling head. This is satisfactory, unless the rivet head is badly deformed, in which case, the pulling head is unduly worn and shall be replaced.

5.1.3.2 Rivet stems. - When visually inspecting the rivet stem and it is found that the stem has not pulled through enough to be visible, the rivet shall be removed. Using a 352B1 inspection gage, which exerts a static load of 10 pounds, place against the trimmed end of the stem. If the stem does not push out, the rivet is acceptable. If the stem does push out the rivet shall be removed and replaced. Before installing a new rivet the hole in the sheet shall be checked with a gage to insure the hole is within the specified limits (see figures 1 and 2).

WHERE BLIND SIDE IS NOT VISIBLE

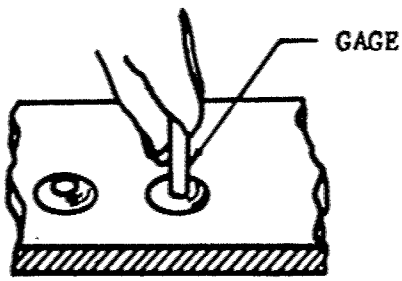

Figure 1. Acceptable blind fasteners conforming to Standard MS20600 or MS20601.

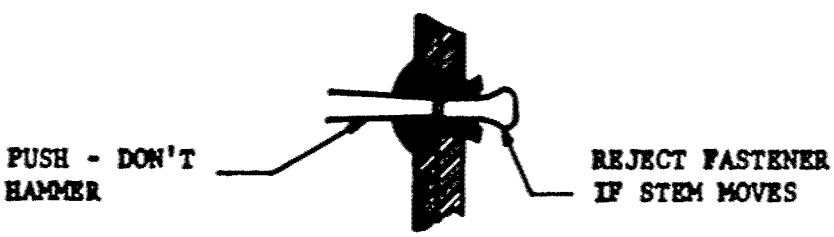

Figure 2. Rejectable blind fasteners conforming to Standard MS20600 or MS20601.

5.1.4 Removal of blind fasteners conforming to Standard MS20600 or MS20601. - The procedure for removing blind fasteners conforming to Standard MS20600 or MS20601 shall be as follows:

(a) Drive out the stem of the self-plugging fastener or plug of hollow fastener with a punch.

(b) The hole in the sleeve shall be used as a pilot to drill through the head only. The drill shall be the same diameter or smaller than the fastener shank.

(c) The head shall be removed without damage to the sheet surface.

(d) The remainder of the fastener shank shall be pushed out with a punch. If the shank will not push out, drill the shank. Take care not to enlarge the hole in the diameter. If the hole is enlarged, redrill for the next larger size and exercise the same care called for in the original installation (see 4.6.1).

5.1.4.1 Stem pull-in. - When the back side of the work is readily visible, some variations of the characteristic tulip head shall be noted. This variation results from the fact that a rivet of this type will adapt itself to the material thickness and the upset head will be formed by the upsetting action until it is tight against the back sheet (see figure 3).

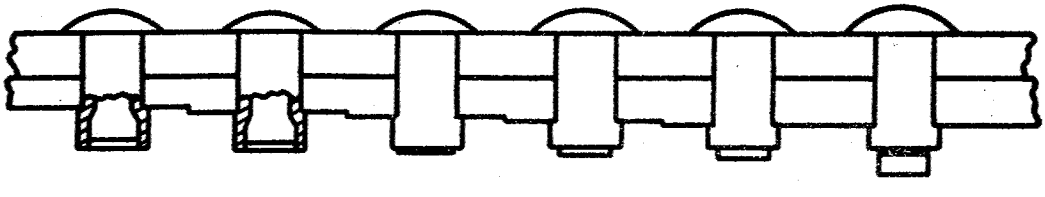

Figure 3. Stem pull-in.

5.1.5 Inspection of Huck CKL blind fasteners. - For CKL locking blind fasteners the locking collar and pin are allowed to vary slightly above or below the manufactured head of a driven blind fastener. The allowable tolerances shall be as specified in figure 4.

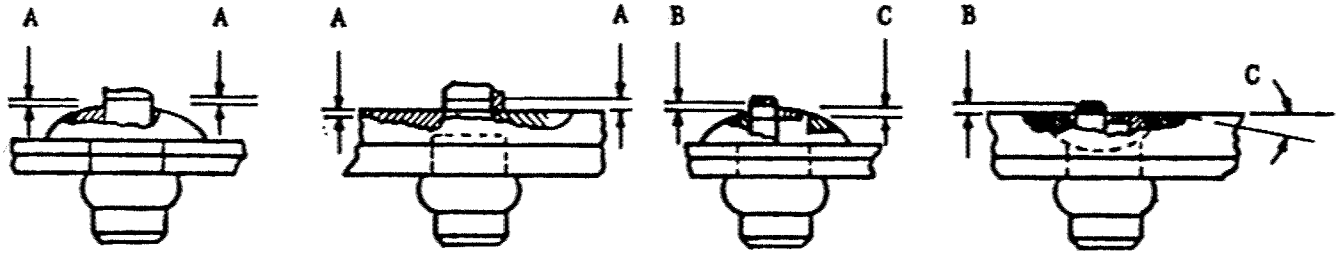

Figure 4. Huck CKL blind fasteners allowable tolerance after assembly.

Fastener dia.	A	B	C
1/8	.006	.008	.004
5/32	.0075	.010	.005
3/16	.009	.012	.006

(Figures are for both brazier and countersunk fasteners.)

A - Maximum allowable distance of locking collar above or below fastener head.

B - Maximum allowable distance of top of land or pin above fastener head.

C - Maximum allowable distance of top of land on pin below fastener head.

5.2 Installation of explosive blind fasteners (Standard MS20602 or MS20603).

5.2.1 Precautions. - The following precautions shall be strictly adhered to:

(a) The fastener shall be stored in a dry place where temperature does not exceed 120 degrees Fahrenheit (F), as excessive heat or humidity causes deterioration of the explosive charge.

(b) Fasteners or boxes of fasteners shall not be placed on steam radiators or other hot objects.

(c) No attempt shall be made to expand fasteners in any way other than with approved tools.

(d) Fasteners accidentally spilled out of the box shall not be used.

(e) The fasteners shall not be expanded in the presence of flammable gases or combustible dusts.

5.2.2 Drilling of holes. - The same precautions and accuracy specified in 5.1.1.1, 5.1.1.4, 5.1.1.5 and 5.1.1.6 shall be used in preparation of holes for explosive blind fasteners.

5.2.2.1 Hole size. - The hole diameter limits, the pilot drill size and the finish drill size shall be as specified in table IV.

Table IV. Explosive blind fastener drill sizes and hole limits

Fastener size	Fastener shank diameter	Pilot drill size	Finish drill size	Hole dia. limits	
				Min.	Max.
1/8	0.134 ±.001	#40 (0.098)	#29 (0.136)	0.136	0.139
5/32	0.171 ±.001	#40 (0.098)	#17 (0.173)	0.173	0.176
3/16	0.202 ±.001	#30 (0.1285)	13/64 (0.203)	0.203	0.207
1/4	0.263 ±.001	#30 (0.1285)	17/64 (0.265)	0.265	0.270

NOTE: Dimensions are in inches.

5.2.2.2 Pilot drilling. - Holes for explosive fasteners shall be pilot drilled before drilling to final size. Drill size shall conform to table IV.

5.2.3 Driving procedure. - The driving procedure shall be as follows:

(a) The sheets shall be held firmly together during the riveting operations.

(b) Explosive fasteners having proper diameter and proper grip length shall be inserted into the drilled hole and expanded by one of the methods specified herein.

5.2.3.1 Electrical heat method.

5.2.3.1.1 Soldering iron. - Soldering irons shall be used to apply electrical heat to the fastener. These irons are designed to handle tips for either brazier or countersunk heads of fastener diameters from 1/8 to 1/4-inch (see table V). (It is important to center the soldering iron tip on the fastener head to avoid contact between the tip and the material being fastened, and to use the proper radius tip for the fastener diameter.)

Table V. Heat controlled setting for heated tips

Fastener diameter	Type head	Heat settings No. 7 iron	No. 8 iron	No. 9 iron
1/8	Brazier	63 to 74		
	Countersink	78 to 88		
5/32	Brazier	63 to 71	70 to 72	
	Countersink	74 to 80	78 to 80	
3/16	Brazier	70 to 75	75 to 77	
	Countersink	83 to 89	85 to 87	
1/4	Brazier			100
	Countersink			105

NOTE: Dimensions are in inches. Temperature in degrees F.

5.2.3.1.1.1 Heat controller. - To insure that the explosive fasteners are expanded in the proper interval of time, heat controllers shall be used with the soldering irons. The procedure for heat controller operation shall be as follows:

(a) Plug heat controller in electrical outlet.

(b) Plug iron into heat controller.

(c) Throw heat controller toggle switch to "ON" position.

(d) Turn heat controller dial to proper setting for size being expanded (see table VI).

5.2.3.1.2 Precision electrical heat tool. - This tool has been designed and energized for exclusive use with DuPont explosive blind fasteners. When properly used it will insure controlled expansion

of the fastener under normal conditions. For recommended settings see tables VII and VIII.

Table VI. Recommended settings for precision fastener machine using aluminum alloy 2017 standard and blast-free fasteners

HEAD	Diameter in inches	Length dash no.	Power range	Heat switch setting	Firing time seconds min.	Firing time seconds max.	Electrode rolled no.
BRAZIER	1/8	- 4 thru - 6	Low	2	1/2	4	3M7B-F
		- 6 thru -28	Low	6	1/2	4	3M7B-F
		-30 thru -36	Low	6	1	4	3M7B-F
	5/32	- 6 thru -22	Medium	2	1/2	4	34M7B-F
		-28 thru -38	Medium	2	1	4	34M7B-F
	3/16	- 8 thru -32	Medium	2	1	4	34M7M-K
		-34 thru -48	Low	6	2	4	34M7M-K
COUNTERSINK	1/8	- 6 thru -10	Low	2	1/2	4	34M7L-K
		-12 thru -24	Low	6	1/2	4	34M7L-K
		-26 thru -36	Low	6	1	4	34M7L-K
	5/32	- 8 thru -24	Medium	2	1/2	4	34M7B-F
		-26 thru -28	Medium	2	1	4	34M7B-F
	3/16	-10 thru -16	Medium	2	1/2	4	34M7M-K
		-18 thru -32	Medium	2	1	4	34M7M-K
		-34 thru -48	Low	6	2	4	34M7M-K

5.2.3.1.2.1 Operating procedure for precision heat tool. - The start-up and operation procedure shall be as follows:

(a) Plug the locking connectors on the hand tool into the heat control unit.

(b) Plug in the 110-115 volt alternating current line cord to the heat control unit and to a source of power.

WARNING

DO NOT CONNECT TO HIGHER VOLTAGE.

(c) Turn power switch to "ON" position. The amber light should light.

(d) Depress the hand tool electrodes against a clean non-conducting surface. The control unit should operate. If not, check the control cable to make sure it is properly plugged into the front panel.

WARNING

DO NOT ROTATE SWITCH WHILE HAND TOOL IS DRAWING CURRENT! THIS MAY CAUSE SEVERE ARCING.

Table VII. Recommended settings for precision fastener machine using aluminum alloy 5056 standard and blast-free fasteners

HEAD	Diameter in inches	Length dash no.	Power range	Heat switch setting	Firing time seconds min.	Firing time seconds max.	Electrode rolled no.
BRAZIER	1/8	- 4	Low	2	1/2	4	34M7B-F
		- 8 thru -28	Low	6	1/2	4	34M7B-F
		-32 thru -36	Low	6	1	4	34M7B-F
	5/32	- 8 thru -20	Medium	2	1/2	4	34M7B-F
		-26 thru -38	Medium	2	1	4	34M7B-F
	3/16	-10 thru -32	Medium	2	1	4	34M7M-F
		-40 thru -48	Low	6	2	4	34M7M-K
COUNTERSINK	1/8	- 8	Low	2	1/2	4	34M7L-K
		-12 thru -24	Low	6	1/2	4	34M7L-K
		-28 thru -36	Low	6	1	4	34M7L-K
	5/32	- 8 thru -20	Medium	2	1/2	4	34M7B-F
		-26 thru -38	Medium	2	1	4	34M7B-F
	3/16	-10 thru -16	Medium	2	1/2	4	34M7M-K
		-24 thru -32	Medium	2	1	4	34M7M-K
		-40 thru -48	Low	6	2	4	34M7M-K

Table VIII. Recommended settings for precision fastener machine using nickel blast-free fasteners

HEAD	Diameter in inches	Length dash no.	Power range	Heat switch setting	Firing time seconds min.	Firing time seconds max.	Electrode rolled no.
BRAZIER	1/8	1/16	Low	2	1/2	4	34M7B-F
	1/8	1/8	Low	6	1/2	4	34M7B-F
		3/16	Low	6	1/2	4	34M7B-F
		1/4	Low	6	1/2	4	34M7B-F
	5/32	1/16	Medium	2	1/2	4	34M7B-F
		1/8	Medium	2	1/2	4	34M7B-F
		3/16	Medium	2	1/2	4	34M7B-F
		1/4	Medium	2	1	4	34M7B-F
	3/16	1/16	Medium	2	1	4	34M7M-K
		1/8	Medium	2	1	4	34M7M-K
		3/16	Medium	2	1	4	34M7M-K
		1/4	Medium	2	1	4	34M7M-K
COUNTERSINK	1/8	1/8	Low	2	1/2	4	34M7L-K
	1/8	3/16	Low	6	1/2	4	34M7L-K
		1/4	Low	6	1/2	4	34M7L-K
	5/32	1/8	Medium	2	1/2	4	34M7B-F
		3/16	Medium	2	1/2	4	34M7B-F
		1/4	Medium	2	1/2	4	34M7B-F
	3/16	1/8	Medium	2	1	4	34M7M-K
		3/16	Medium	2	1	4	34M7M-K
		1/4	Medium	2	1	4	34M7M-K

5.2.3.2 Frictional heat method. - A spinning tool is used in this method to expand explosive blind fasteners. This tool shall incorporate a phenolic head mounted on a steel shank designed to fit drill chuck. Chucked in drill motor, the spinning tool is applied to the fastener and sufficient heat is generated by friction to explode the fastener.

5.2.3.2.1 Operating procedure. - The operating procedure for the frictional heat spinning tool shall be as follows:

(a) Secure the spinning tool of proper shape and size for the applicable fasteners.

(b) Insert spinning tool in drill chuck.

(c) Insert fastener in drilled hole. Be sure it is properly seated. Tap fasteners if necessary to properly seat.

(d) Apply spinning tool to fastener with sufficient pressure that friction of tool on fastener head will explode fastener within 1-1/2 to 6 seconds.

5.2.4 Use of installation tools. - The following illustrations show how installation tools shall be used to expand explosive rivets.

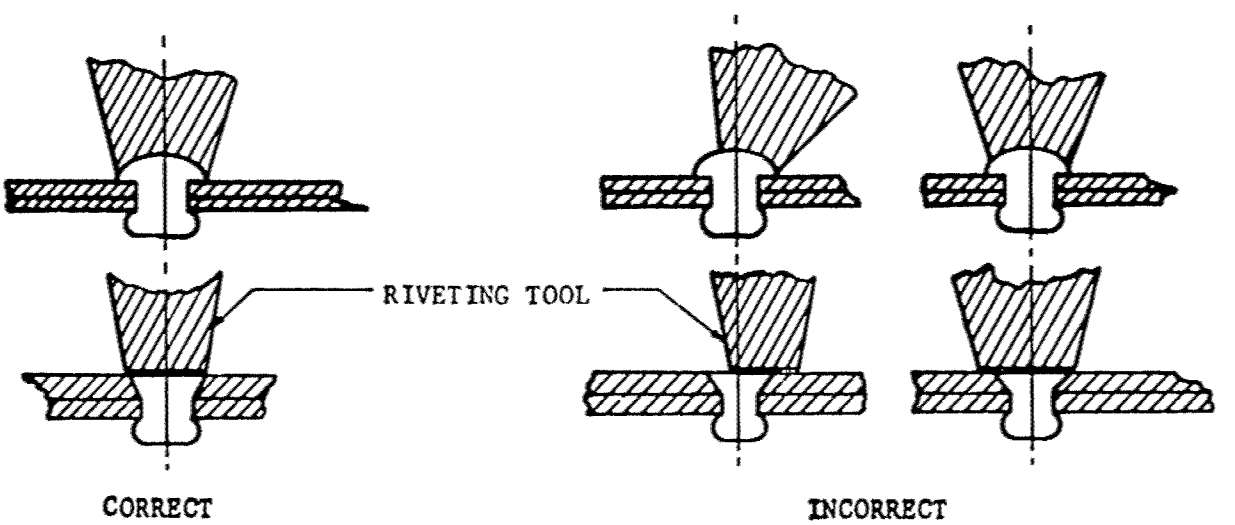

Figure 5. Use of installation tools.

5.2.5 Inspection of explosive blind fasteners.

5.2.5.1 Fastener head seating. - The fastener heads shall seat tightly after installation.

5.2.5.1.1 Visible formed heads. - Where the blind head is visible, acceptable heads shall appear as shown in figure 6.

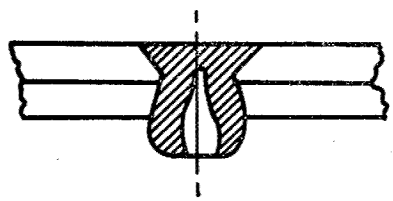

Figure 6. DuPont explosive blind fastener - acceptable blind head.

5.2.5.1.2 Barrel-shaped end. - A barrel-shaped end as shown in figure 7 is formed when explosive rivets expand. If the blind end is visible after installation, inspect for proper head formation and splits. Splits are not acceptable in more than five percent of the rivets fired.

Figure 7. Barrel-shaped end.

5.3 Installation of hi-shear rivets.

5.3.1 Drilling of holes. - The holes shall be round and within the size limits specified. The driven fastener shall be expanded to completely fill the hole. An overfilled hole may cause lengthening of the sleeve toward the manufactured head, resulting in a separation of the sheets being fastened, or in clearance between the manufactured

head and the sheets. In final drilling the holes shall be held within the diameter limits.

5.3.1.1 Hole size. - Final hole sizes for hi-shear rivets shall be as noted on the drawing, when deviations exist from this standard, and shall be in conformance to the hole sizes specified in tables IX and X.

Table IX. Hole sizes for structural design
(Hi-shear BB351 and BB352)

Nominal diameter	Hole diameter limits	
	Min.	Max.
5/32	0.170	0.173
3/16	0.197	0.201
1/4	0.258	0.264
5/16	0.339	0.345
3/8	0.391	0.397
7/16	0.469	0.475
1/2	0.531	0.539

NOTE: Dimensions are in inches.

Table X. Hi-shear rivet hole sizes

Nominal diameter	Diameter Reamed holes	Diameter Class I Holes
3/16	0.1889 - 0.1899	0.189 - 0.192
1/4	0.2487 - 0.2497	0.250 - 0.254
5/16	0.3112 - 0.3122	0.313 - 0.317
3/8	0.3737 - 0.3752	0.375 - 0.379

NOTE: Dimensions are in inches.

5.3.1.1.1 Three or less fasteners. - When three or less fasteners are used in primary structure, reamed holes shall be used. Only MS Standard series bolts or hi-shear rivets shall be used in reamed holes.

5.3.1.1.2 Four or more fasteners. - In primary structure where four or more fasteners are installed, class I holes, as specified in table X, shall be used.

5.3.1.1.3 Dimpled holes. - Hi-shear rivet holes to be dimpled shall be drilled as specified in table XI. Upon completion of drilling, the hole shall be dimpled and drilled to final hole size as noted on the applicable drawing.

Table XI. Dimple holes sizes - hi-shear rivets

Nominal dia.	Hole size
3/16	#17 (0.173)
1/4	# 1 (0.228)
5/16	9/32 (0.281)
3/8	5/16 (0.321)

NOTE: Dimensions are in inches.

5.3.2 Hi-shear collars. - Collars, as received from the manufacturers, are lubricated. Hi-shear collars shall be stored in an area having an ambient temperature of 85 degrees (maximum) F and shall be protected from the elements such as moisture and dirt.

5.3.3 Installation.

5.3.3.1 Equipment. - Hi-shear riveting shall be accomplished with conventional pneumatically activated riveting guns or hydraulically activated squeezer-type riveting equipment, fitted with hi-shear riveting adapter sets or an approved equal. These sets, similar to conventional riveting sets, form the collars to the pin and at the same time cut off and eject excess material through a discharge port.

5.3.3.2 Rivet set position. - Rivet set shall not be tipped more than 5 degrees from the perpendicular rivet axis.

5.3.3.3 Rivet set wear. - Rivet sets shall be checked periodically for wear. A rivet set that consistently produces burrs or flash instead of cleanly cutting off the collar shall not be used.

5.3.3.4 Pin and collar limits. - When the drawing does not give the pin length, the work shall be clamped firmly together so that a gap does not exist between the material to be riveted. Check the position of the pin groove edge to the surface of the work. The groove edge must extend beyond the work. This is the maximum grip check. Place

the collar on the pin. The pin trimming edge must fall slightly below the top of the collar. This is the grip check (see figure 8, A and B).

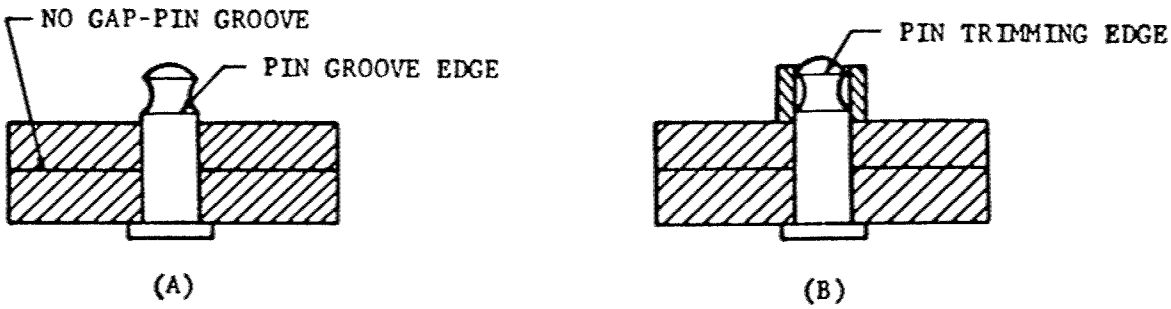

Figure 8. Pin and collar limits.

5.3.3.5 Interference fits. - When an interference fit is specified, the following additional operations shall be required:

(a) Break sharp edges of the drilled or reamed hole to limits specified in paragraph 4.2.

(b) The rivet shall be driven into the hole to a fully seated position prior to swaging the collars.

5.3.4 Removal methods for hi-shear rivets.

5.3.4.1 Drill-out bushing method. - Using a drill-out bushing to assure proper alignment, hi-shear rivets shall be removed as follows:

(a) Apply drill-out bushing to collar (see figure 9).

(b) Using a drill bit of the same diameter as the rivet body diameter, insert the drill-bit through the drill-out bushing and to the rounded end of the rivet (see figure 10). Drill only deep enough to pass the grooved portion of the pin.

(c) Tap the pin with a mallet, supporting the work on both sides of the head to remove pin (see figure 11).

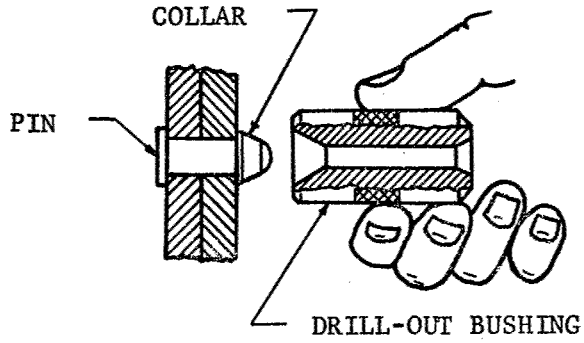

Figure 9. Drill-out bushing.

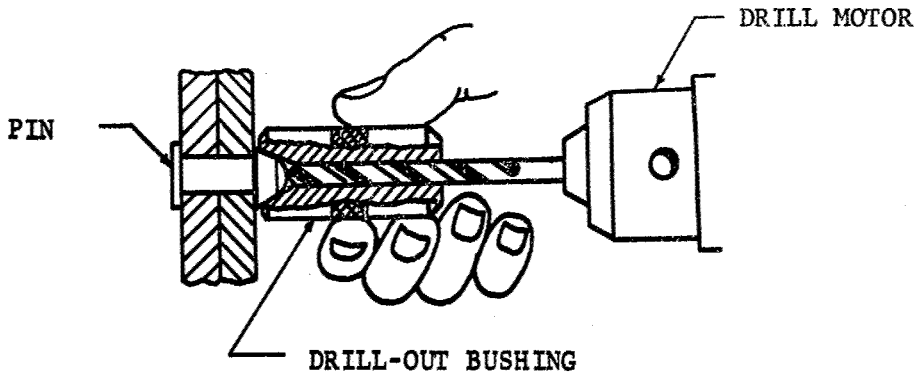

Figure 10. Drill-out of pin.

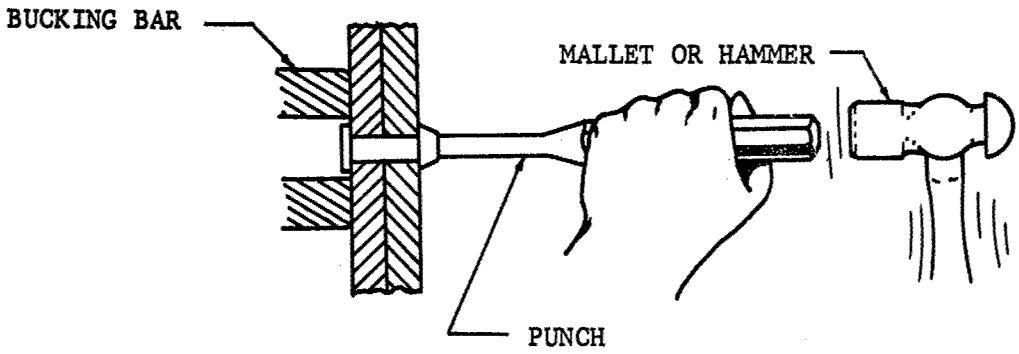

Figure 11. Pin removal.

5.3.4.2 Punch-out method. - The use of the punch-out method shall be for 3/16 and 1/4-inch hi-shear rivets. When using the punch-out method the hi-shear rivets shall be removed in the following manner:

(a) Insert the punch into the rivet gun. Slip on guide punch (see figure 12).

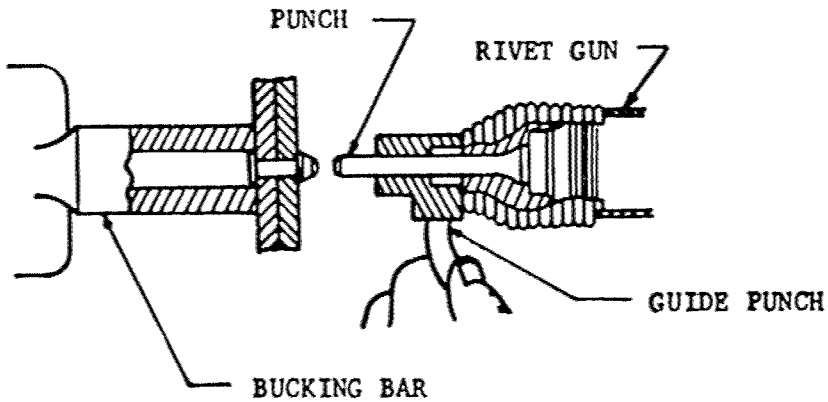

Figure 12. Guide punch and punch position.

(b) Apply punch to pin end. Support work on back side with hollow bucking bar (see figure 13).

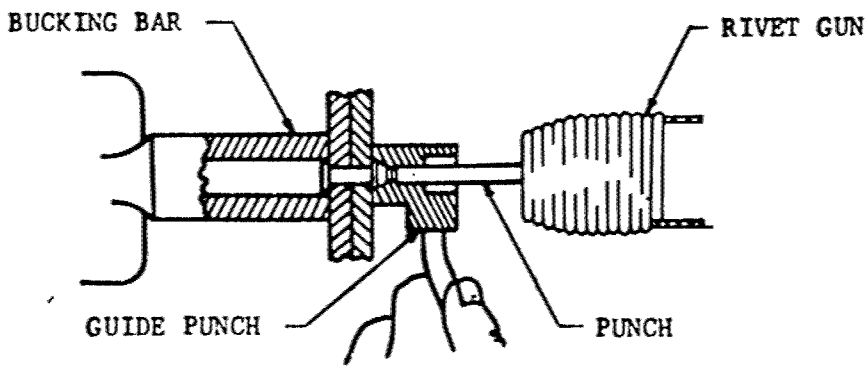

Figure 13. Punch to pin.

(c) Turn "ON" rivet gun and drive rivet back through the collar into the hollow of the bucking bar by shearing the collar (see figure 14).

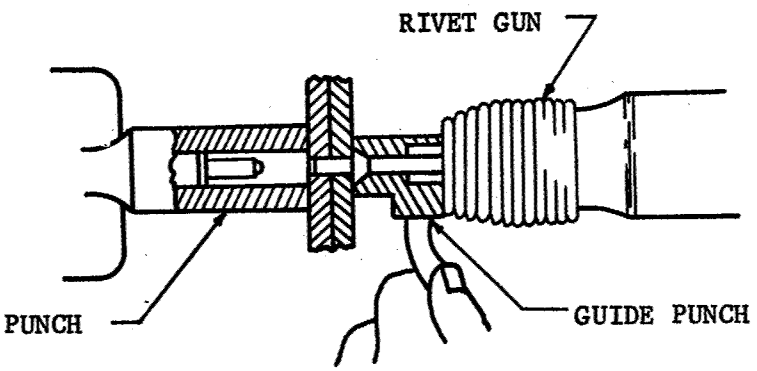

Figure 14. Rivet back through collar.

5.3.4.3 Hollow mill method. - Using a hi-shear hollow mill, apply the cutter to the collar and remove as follows:

(a) Insert hollow mill into drill motor.

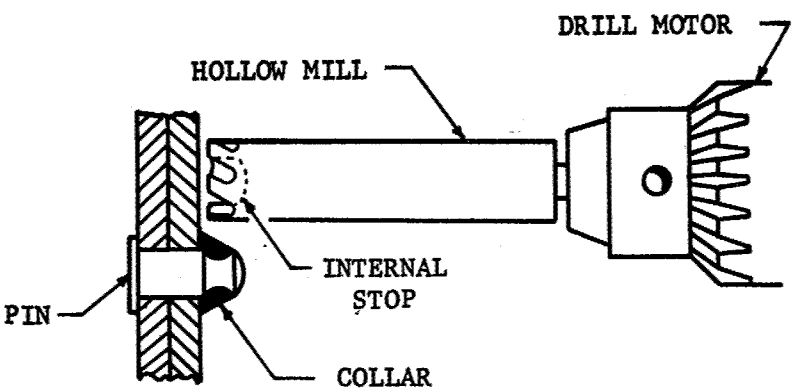

Figure 15. Hollow mill and drill.

(b) Apply hollow mill to collar and drill until internal stop seats on pin end.

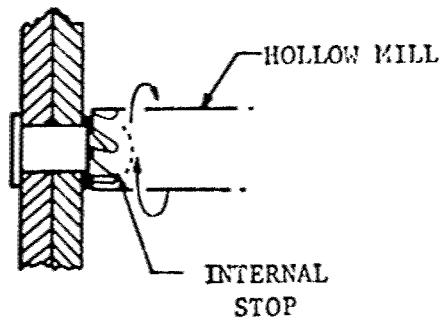

Figure 16. Hollow mill to pin.

(c) Drive out pin with a sharp tap of the hammer.

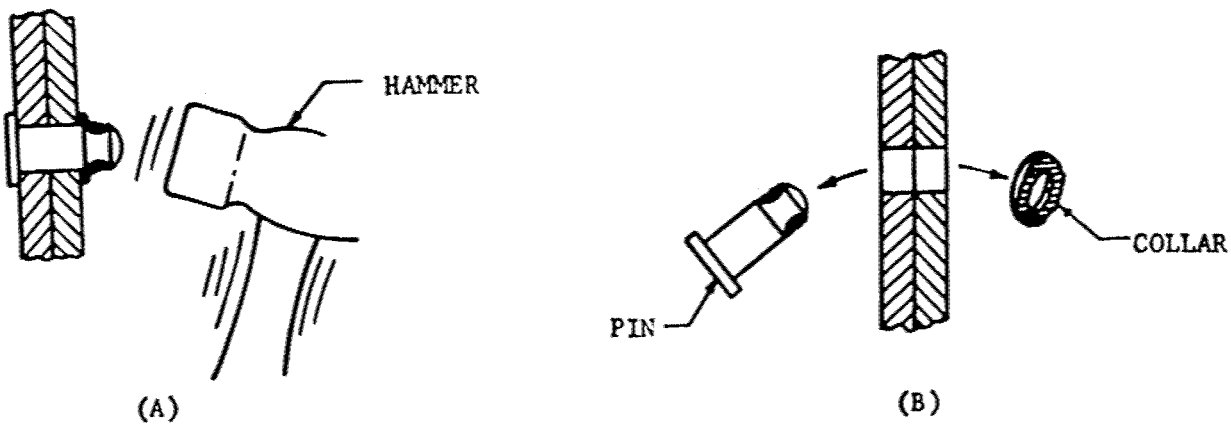

Figure 17. Driving out pin and collar.

5.4.3.4 Removal by chisel method. - Use a chisel and remove collar and pin as follows (see figure 18):

(a) Crack collar with chisel.

(b) Repeat collar cracking on opposite side of collar.

(c) Pry collar pieces loose.

(d) Drive out pin with hammer and punch.

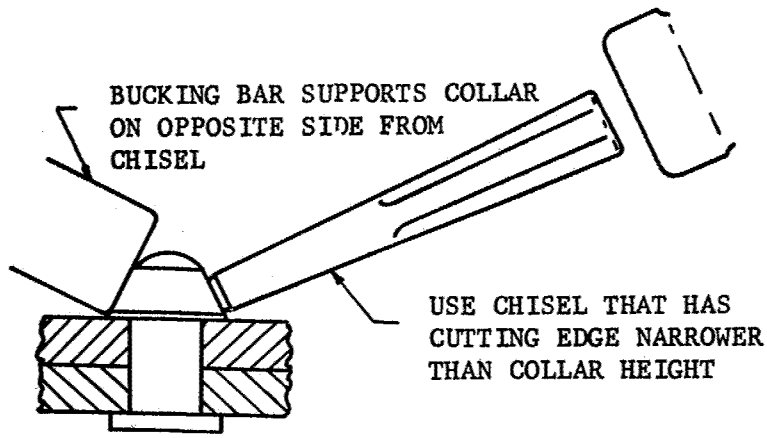

Figure 18. Chisel method.

CAUTION

Removing operations shall be done with extreme care to prevent damage to work.

5.3.5 Inspection of hi-shear rivets.

5.3.5.1 Pin projection. - The pin projection "H" shall be within the limits specified in table XII, when the collar is driven against a sloping surface. The pin projection shall be measured on both sides. Use of aluminum washer is acceptable provided the minimum thickness is 0.032-inch and a maximum thickness of 0.064.

5.3.5.2 Inspection. The inspection of the assembled rivet is visual only, without gages or special tools. Figure 19 shows a good

rivet. The work is drawn up tightly. The pin is of correct length and the collar is well trimmed and neatly formed. Figures 20, 21, and 22 show acceptable heads.

Table XII. Pin projection - hi-shear rivets

Nominal dia.	H minimum	H maximum
3/16	0.115	0.199
1/4	0.155	0.239
5/16	0.197	0.281
3/8	0.238	0.322

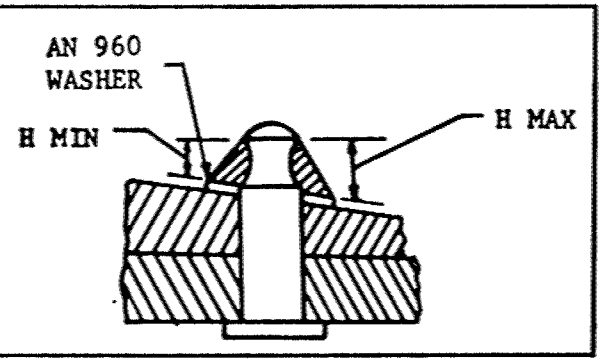

NOTE: Dimensions are in inches.

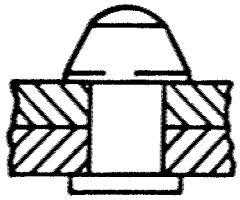

Figure 19. Good rivet.

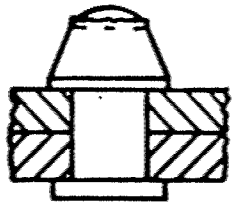

Figure 20. Slightly ragged, broken collar edge.

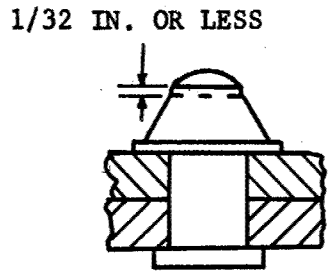

Figure 21. Collar slightly overdriven.

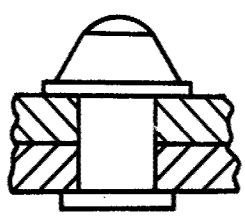

Figure 22. Shoulder at base of collar.

5.4 Installation of solid rivets.

5.4.1 Drilling of holes.

5.4.1.1 Standard MS20426 and MS20470 rivets. - Hole sizes shall conform to those in table XIII.

Table XIII. Rivet hole size and hole tolerances for Standard MS20426 or MS20470 type rivets

Dia.	Rivet type		Drill size	Hole tolerance		Countersink size (applies only to MS20426)	Rivet diameter
				Plus	Minus		
1/16	MS20426-2	MS20470-2	0.067 (No. 51)	0.003	0.001	100 CSK to 0.114 ± 0.004 dia.	1/16
3/32	MS20426-3	MS20470-3	0.096 (No. 41)	0.003	0.001	100 CSK to 0.179 ± 0.004 dia.	3/32
1/8	MS20426-4	MS20470-4	0.128 (No. 30)	0.003	0.001	100 CSK to 0.225 ± 0.004 dia.	1/8
5/32	MS20426-5	MS20470-5	0.159 (No. 21)	0.003	0.001	100 CSK to 0.286 ± 0.004 dia.	5/32
3/16	MS20426-6	MS20470-6	0.191 (No. 11)	0.003	0.001	100 CSK to 0.353 ± 0.004 dia.	3/16
7/32	MS20426-7	MS20470-7	0.228 (No. 1)	0.004	0.001	100 CSK to 0.415 ± 0.004 dia.	7/32
1/4	MS20426-8	MS20470-8	0.257 (No. F)	0.004	0.001	100 CSK to 0.476 ± 0.004 dia.	1/4
5/16	MS20426-10	MS20470-10	0.316 (No. O)	0.004	0.001	100 CSK to 0.564 ± 0.004 dia.	5/16
3/8	MS20426-12	MS20470-12	0.377 (No. V)	0.004	0.001	100 CSK to 0.694 ± 0.004 dia.	3/8

NOTE: Dimensions in inches.

5.4.1.2 Drilling procedure.

(a) Material shall be clamped together securely before drilling to minimize burrs and chips between faying surfaces. Thin gage materials must be backed by a firm support to prevent sheet separation. Use temporary fasteners to hold sheets together for drilling.

(b) Drill must be held so as to drill holes normal to the sheet surfaces. Drilling aids (i.e. bushings, drill bars, etc.) shall be used whenever practical.

(c) Only the shortest drills possible, properly sharpened and cleaned, shall be used.

(d) Pre-drilling shall not be mandatory when the desired finish and hole tolerance can be maintained without pre-drilling.

(e) Specially ground drills shall be used for drilling stainless steel and titanium. In areas where the material cannot be disassembled for deburring, no more than 50 holes will be drilled in titanium structure without grinding the drill bit.

5.4.1.3 Upset head dimensions. - The height and diameter of the upset head shall be determined as indicated in figure 23 and table XIV. All sizes not included in table XIV shall be calculated by the following figure and equation:

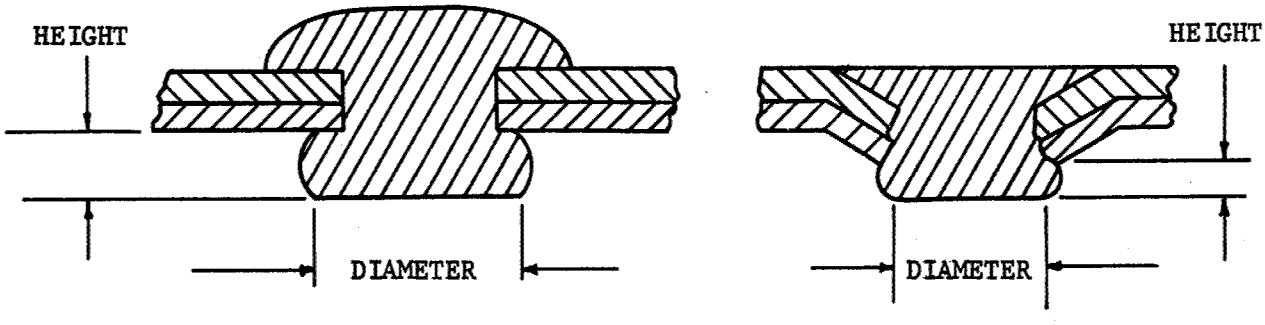

Figure 23. Upset rivet head dimensions.

Table XIV. Upset head dimensions

Rivet diameter	Head diameter		Head height	
	min.	max.	min.	max.
1/16	.087	.099	.024	.040
3/32	.130	.149	.037	.056
1/8	.175	.200	.050	.075
5/32	.218	.250	.062	.094
3/16	.261	.299	.075	.113
7/32*	.305	.348	.087	.130
1/4	.350	.400	.100	.150
9/32*	.393	.489	.112	.168
5/16	.437	.499	.128	.187
11/32*	.480	.548	.137	.205
3/8	.515	.600	.140	.225
13/32	.568	.649	.162	.243

NOTE: Dimensions are in inches.
*Oversize replacement.

DIAMETER.

(a) MAXIMUM - 1.6 TIMES THE RIVET SHANK DIAMETER.

(b) MINIMUM - 1.4 TIMES THE RIVET SHANK.

HEIGHT.

(a) MAXIMUM - 0.6 TIMES THE RIVET SHANK.

(b) MINIMUM - 0.4 TIMES THE RIVET SHANK.

5.4.2 Countersinking.

5.4.2.1 Countersinking tools. - Tools used for countersinking shall be sharp and in good condition.

5.4.2.1.1 Countersink tool angle. - The countersinking tool shall have an angle corresponding to the rivet angle to be installed (i.e. use 100 degree countersink for 100 degrees countersunk rivet).

5.4.2.2 Dimpling countersink. - When countersinking a substructure to receive a coin dimple, a 100 degree stop countersink shall be used. Depth of dimple shall be controlled by suitable gage to assure "nesting" of the dimple in the countersink.

5.4.2.3 Thin materials. - When countersinking thin materials, rigid support shall be provided for the material so that the depth of countersinking can be adequately controlled.

5.4.2.4 Countersunk heads. - Heads of countersunk rivets shall not be below the skin surface either before or after driving. The projection height of countersunk rivet heads exposed to air stream shall not exceed 0.004 inch. A maximum of 0.006 inch may be shaved from the protruding head in order to meet this requirement.

5.4.3 Rivet driving.

5.4.3.1 General riveting.

5.4.3.1.1 Riveting contoured assemblies. - When riveting contoured assemblies, rivet shall be "tacked" every fifth or sixth hole before driving.

5.4.3.1.2 Fuel and oxidizer containers. - Color coded or coated rivets shall not be used in the fuel or oxidizer containers.

5.4.3.1.3 Driven oversize rivet heads. - The driven head of an oversize rivet shall conform to head thickness and head diameter requirements specified in table XV.

Table XV. Minimum flattened dimension of manufactured rivet heads (Standard MS20470 universal head rivets)

Rivet diameter	Head height
1/8	0.042
5/32	0.052
3/16	0.062
1/4	0.083
5/16	0.104
3/8	0.125

5.4.3.1.4 Driven universal heads. - Driven universal heads shall be formed on the shank side of the rivet by using a universal head die set 1/32-inch smaller than the shank diameter (i.e. 1/8-inch die for 5/32-inch rivet).

5.4.3.1.4.1 Substitutions. - Universal head rivets with the driven head formed into the countersink may be substituted for flush rivet without drawing change, provided engineering approval is obtained.

5.4.3.2 Squeezer-vibrator riveting. - Squeezer-vibrator type equipment shall be of a type approved by engineering and shall be capable of providing the necessary clamping pressures prior to upsetting. Periodic checks shall be made of the equipment to insure the use of correct pre-pressure.

5.4.3.2.1 Rivet and pressure foot sets. - The rivet and pressure foot sets shall have the material clamped together with the applicable pressure, before the gun begins the riveting cycle.

5.4.3.2.2 Gun capabilities. - The gun shall be capable of upsetting the rivet in the minimum number of blows, without marking or quilting the material. When marking or quilting occurs, engineering should be contacted. Minimum foot pressure shall be 1,750 pounds (plus or minus 5 percent) when the thinnest member is 0.050-inch; and 2,000 pounds (plus or minus 5 percent) when the thinnest member is 0.063-inch or thicker.

5.4.3.2.3 Alignment of parts. - To hold parts in alignment during the riveting operation, sufficient attachments shall be used, such as sliding-fit-pins, temporary bolts, Clecos, squeeze-vibrated rivets or pull-through type blind rivets. When possible, install all the rivets in the assembly before upsetting.

5.4.3.2.3.1 Pull-through type rivets. - Pull-through type rivets shall not be used when the thinnest member to be riveted is over 0.125-inches or for tacking where faying surface sealants are used. They are satisfactory for use only in dry joints. Use only flush type rivets to prevent skin surface marking.

5.4.3.3 Multiple (gang) riveting.

5.4.3.3.1 Head height. - Manufactured head height after driving shall conform to the requirements of table XV.

5.4.3.3.2 Countersunk rivet head height. - Countersunk heads shall not be below flush before driving in the gage riveter to produce driven rivets without gaps under the head.

5.4.3.4 Erco punching and riveting.

5.4.3.4.1 Allowable punching thickness. - For rivets having protruding heads, the total material thickness that may be punched by Erco punching and riveting machines shall not exceed the nominal diameter of rivet.

5.4.3.4.2 Allowable materials. - Holes may be satisfactorily punched in aluminum and steel alloy sheets by this process. Engineering approval shall be obtained for use of this process for punching all other materials.

5.4.3.4.3 Hole diameter. - Maximum diameter of Erco punched holes shall not be greater than the values listed in table XVI.

Table XVI. Maximum diameter - Erco punched holes

Rivet diameter	Max. hole dia.
1/8	0.146
5/32	0.180
3/16	0.214

NOTE: Dimensions are in inches.

5.4.3.4.4 Test punch. - Test strips utilizing the same material of the same thickness as the parts to be riveted shall be used to pre-check hole sizes.

5.4.3.4.5 Head dimensions. - Driven heads shall conform to minimum head thickness dimensions shown in table XIV and head marking limits shown in table XVII.

Table XVII. Maximum allowable height of pin mark

Rivet diameter	Height of pin mark A	
3/32	0.005	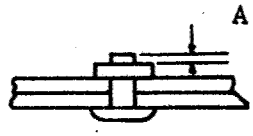
1/8	0.010	
5/32	0.015	
3/16	0.020	

NOTE: Dimensions are in inches.

5.4.4 Inspection of standard solid rivets. - The following requirements are minimums to be applied to 10 percent of the rivets in the joints and shall not be basis for acceptance of over 10 percent of rivets having the described defects.

5.4.4.1 Driven head shape. - The driven head diameter of out-of-round rivets for inspection purposes shall be the minimum diameter measurable. Tipped and cut heads are acceptable if average thickness is equal to the minimum allowable for that particular size of rivet (see figure 24).

Figure 24. Out-of-round driven heads.

5.4.4.2 Driven head cracks. - Cracked driven heads shall be evaluated as to cause and severity and shall be accepted or rejected as described below:

(a) Diagonal crack: Diagonal cracks at 45 degree angle on the side of driven head shall be cause for rejection when there are more than three cracks which do not intersect.

(b) Vertical cracks: Vertical cracks caused by rivet wire lap are acceptable. Cracks due to overheating shall be cause for the rejection of the overheated batch of rivets as well as those that exhibit cracks when driven.

5.4.4.3 Driven head deformed.

5.4.4.3.1 Clinched, bent or club heads. - Clinched, bent or club heads shall be cause for rejection (see figure 25).

5.4.4.4 Manufactured heads.

5.4.4.4.1 Flush seating of manufactured head. - Flush seating of manufactured head is mandatory and must be achieved in one drive. Redriving shall not be considered acceptable due to flash formation. A gap of 0.002 inch (feeler gage measurements) under the head shall be cause for rejection (see figure 25).

Figure 25. Deformed driven heads.

5.4.4.4.2 Undersize cupping radius. - The use of an undersize rivet set shall be cause for rejection of rivets. Such a rivet set leaves a circular indentation in the manufactured head and all rivets showing such a mark shall be rejected (see figure 26).

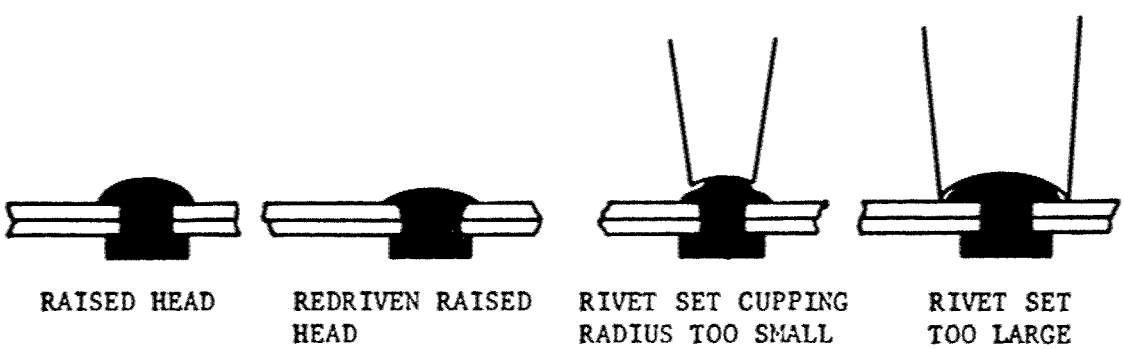

Figure 26. Not acceptable driven rivets.

5.4.4.4.3 Oversize cupping radius. - Oversize rivet sets shall not be used as the sheet around the rivet is usually damaged (see figure 26).

5.4.4.4.4 Countersink depth. - Flush rivet manufactured heads shall seat tightly in the countersink. The maximum gap allowable on 40 percent of the head circumference is .002-inch and is acceptable on not more than 10 percent of a rivet pattern. Countersink depth should be inspected before rivet installation to prevent the above defect (caused by excessive countersink depth).

5.4.4.5 Acceptability. - Acceptability of sheets shall be determined individually and shall be based upon the impairment of corrosion resistance and strength properties caused by scratches, gouges or other surface imperfections.

5.4.4.6 Head flushness.

5.4.4.6.1 Limits. - Unless otherwise specified herein or on the applicable drawing, flushness limits shall be plus 0.010-minus 0.005-inch.

5.4.4.6.2 Tanks and pressurized sections. - On tanks and pressurized sections, rivet heads below the sheet surface shall not be acceptable. Rivet heads shall be driven high and shaved, where necessary, to meet maximum flushness requirements.

5.4.4.7 Shaving. - Rivets that are shaved to meet close tolerance requirements for heads shall be brushed over with alodine solution with the approval of the procuring activity.

5.4.4.7.1 Shaving aluminum alloy rivets. - Precautions shall be taken to prevent damage to sheet surface by setting stop to prevent contact during shaving operations. The cutter shall be larger than the rivet head diameter. See table XVIII for proper size of cutter. Head protrusion and diameter shall be in accordance with table XIX after shaving.

Table XVIII. Rivet shaver and cutter diameters

Rivet diameter (inches)	3/32	1/8	5/32	3/16	1/4	5/16	3/8
Cutter diameter (inches)	3/8	3/8	3/8	7/16	9/16	5/8	3/4

5.5 Tubular rivets (Standard MS20450 and similar). - Tubular rivets shall be used primarily for joining thin sheets where a larger bearing area is required without appreciably increasing the rivet weight. The tubular rivets will generally be used for noncritical applications such as attaching nameplates.

5.5.1 Hole size. - Hole sizes for tubular rivets shall be identical to those used for solid rivets as shown in table XIV.

Table XIX. Checking dimensions - rivet shaving

Nominal rivet diameter (inches)	3/32	1/8	5/32	3/16	1/4	5/16	3/8
H Maximum head protrusion prior to shaving (inches)	0.006	0.007	0.009	0.010	0.012	0.014	0.016
D Minimum head diameter after shaving (inches)	0.061	0.240	0.262	0.326	0.433	0.526	0.650

5.5.2 Installation.

5.5.2.1 Head forming. - The driven head shall be formed by spinning or squeezing with a Townsend Tool Company tubular rivet tool or an approved equal.

5.5.2.2 Head pressure. - Firm pressure shall be maintained on the manufactured head during installation.

5.5.2.3 Type A tubular rivet. - Type A (copper) tubular rivets shall be installed with a washer under the driven head (see Standard MS20450).

5.5.2.4 Dimpling and countersinking. - Dimpling and countersinking for tubular rivets shall be identical to solid rivets.

5.5.3 General inspection.

5.5.3.1 Driven head defects. - The driven head shall be free of scratches or gouges that are in excess of 10 percent of the head thickness after forming.

5.5.3.2 Head to bearing surface gap. - A gap of 0.005-inch between the driven head and bearing surface shall be permissible providing no more than 40 percent of the head circumference has the gap.

5.5.3.3 Manufacturing heads.

5.5.3.3.1 Flush seating. - Manufactured heads shall seat flush on the sheet surface. Heads raised above the surface shall not be redriven because a lap and flash would be formed at the junction of the shank and the manufactured head. If an 0.002-inch shim slides freely under the

head without wedging to contact the shank (or flash which might have formed), the rivet shall be rejected. (See figure 26.)

5.5.3.3.2 Undersize cupping radius. - If a rivet set is used which does not make initial contact at the peak of the head (too small a cupping radius), the shank drives up into the manufactured head and forms a lap or crack at the junction of shank and head. Therefore, all rivets showing a mark indicating the use of a rivet set as described above shall be replaced. This mark is a complete circle indented into the manufactured head of the rivet as shown in figure 26.

5.5.3.3.3 Oversize cupping radius. - Oversize cupping radius dies shall not be used as the oversize cupping radius usually results in the edge of the die injuring the sheet around the rivet. (See figure 26.)

5.5.3.3.4 Countersink depth. - The manufactured head of flush rivets shall seat tightly in the countersink or dimple. Gaps which allow insertion of an 0.002-inch shim between the rivet head and the countersink or dimple for 40 percent or less of the head circumference shall be acceptable in not more than 10 percent of a group of rivets if the rivets having these gaps are scattered. Inspection of countersink depth is a more positive means of eliminating gaps since too deep a countersink will result in an excessive gap.

5.6 Lockbolts - pull type and stump type.

5.6.1 Hole size.

5.6.1.1 Hole size limits. - To insure that the extended driven rivet completely fills the hole, the holes shall be round and within the size limits specified in table XX.

5.6.1.2 Dimpled holes. - When dimpling is specified, pilot holes shall be drilled, then the part shall be dimpled and drilled to the final hole size as noted on the drawing.

5.6.2 Installation.

5.6.2.1 Pull type. - The installation of the pull type lockbolt is automatic and continuous and shall be in the following sequence (see figure 27):

(a) Insert the pin from one side of the work; then place the locking collar over the extruding lockbolt pin tail. The gun is then applied; the chuck jaws automatically engage the pull grooves of the extending pin tail.

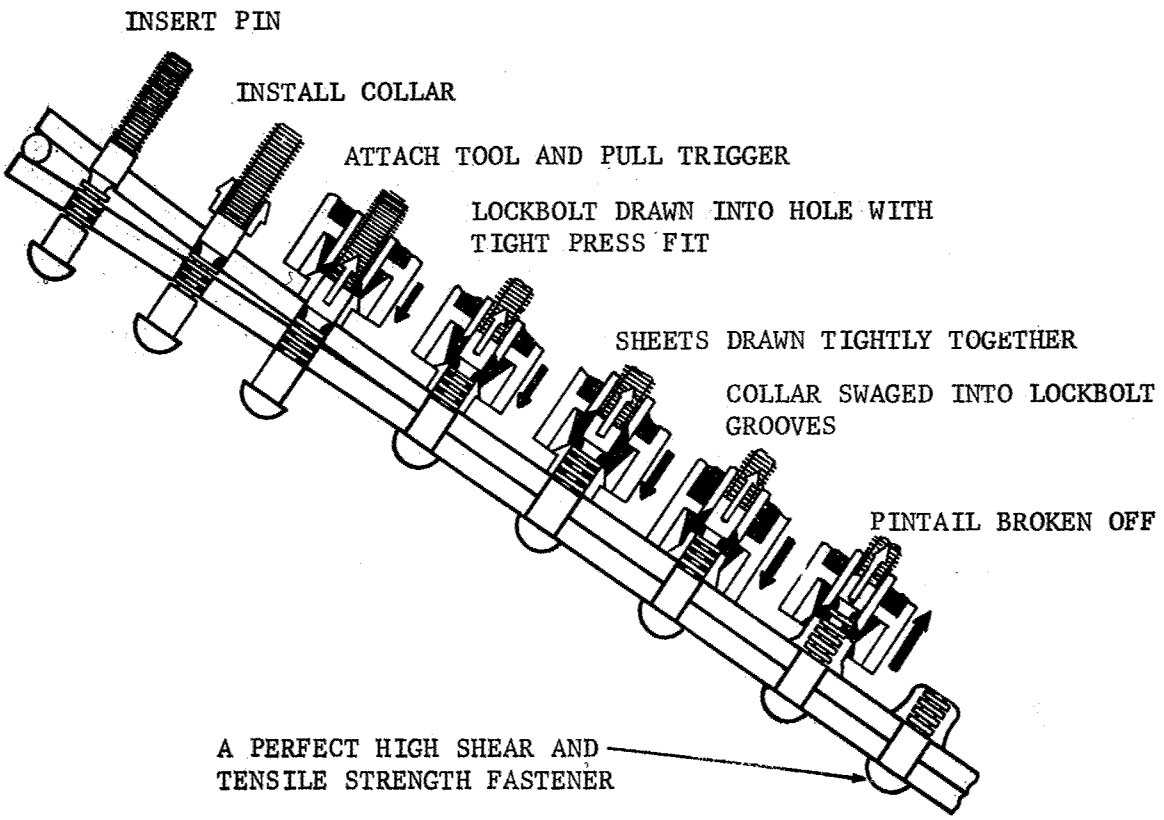

Figure 27. Installation of pull-type lockbolts.

(b) Depressing the gun trigger causes a pull to be exerted on the pin. The reaction on the pull is taken against the collar by the swaging anvil. This pull draws the work tightly together equivalent to a fitting up operation. After the faying surfaces are in intimate contact, the pin is pulled into an interference or clearance fit hole.

(c) As the pull on the pin increases, the anvil is drawn over the collar, swaging the collar into the locking grooves of the pin to form a rigid, permanent lock.

(d) Continued buildup of force automatically breaks the lockbolt pin in tension at the breakneck groove and the pin tail is automatically ejected. When the gun piston returns to its initial forward position, the ejector advances to disengage the anvil from the swaged collar.

Table XX. Lockbolts - recommended drill sizes (and collars)

Huck part number	Diameter (inches)	Pilot-drill	Size drill	Hole size	Remarks	Collar
R1029-T10	5/16	----------	Obsolete - replace with R3002-T10			----------
R1029-T12	3/8	----------	Obsolete - replace with R3002-T12			----------
R1028-T10	5/16	----------	Obsolete - replace with R3001-T10			----------
R1028-T12	3/8	----------	Obsolete - replace with R3001-TR			----------
ACT509-T6	3/16	----------	Obsolete - replace with R3002-T6			----------
ACT509-T8	1/4	----------	Obsolete - replace with R3002-T8			----------
R3007-T10	----------		Use full tension OALP-T10			----------
R3007-T12	----------		Use full tension OALP-T12			----------
R3008-T10	----------		Use full tension OAL509-T10			----------
R3008-T12	----------		Use full tension OAL509-T12			----------
R3001-T6	3/16	#18 .1695	#13 .185	.185/.188	Interference fit	LC-C6
R3001-T6	3/16	#18 .1695	4.75MM .187	.187/.189	Partial interference fit	LC-C6
R3001-T6	3/16		#11 .191	.190/.200	Clearance fit	LC-C6
R3002-T6	3/16	#18 .1695	#13 .185	.185/.188	Interference fit	LC-C6

Table XX. Lockbolts - recommended drill sizes (and collars) (cont'd)

Huck part number	Diameter (inches)	Pilot-drill	Size drill	Hole size	Remarks	Collar
R3002-T6	3/16	#18 .1695	4.75MM .187	.187/.189	Partial interference fit	LC-C6
R3002-T6	3/16		#11 .191	.190/.200	Clearance fit	LC-C6
R3001-T8	1/4	#1 .228	6.2MM .2441	.247/.247	Interference fit	LC-C8
R3001-T8	1/4	#1 .228	6.3MM .248	.247/.249	Partial interference fit	LC-C8
R3001-T8	1/4		1/4 .250	.250/.260	Clearance fit	LC-C8
R3002-T8	1/4	#1 .228	6.2MM .2441	.244/.247	Interference fit	LC-C8
R3002-T8	1/4	#1 .228	6.3MM .248	.247/.249	Partial interference	LC-C8
R3002-T8	1/4		1/4 .250	.250/.260	Clearance fit	LC-C8
R3001-T10	5/16	"L" .290	7.8MM .3071	.307/.310	Interference	7LC-C10
R3001-T10	5/16	"L" .290	7.9MM .311	.310/.312	Partial interference	7LC-C10
R3001-T10	5/16		5/16 .3125	.3125/.322	Clearance fit	7LC-C10
R3002-T10	5/16	"L" .290	7.8MM .3071	.307/.310	Interference	7LC-C10
R3002-T10	5/16	"L" .290	7.9MM .311	.310/.312	Partial interference	7LC-C10

Table XX. Lockbolts - recommended drill sizes (and collars) (cont'd)

Huck part number	Diameter (inches)	Pilot-drill	Size drill	Hole size	Remarks	Collar
R3002-T10	5/16		5/16 .3125	.3125/.322	Clearance	7LC-C10
R3001-T12	3/8	11/32 .3438	9.4MM .3701	.369/.372	Interference	7LC-C12
R3001-T12	3/8	11/32 .3428	9.5MM .374	.372/.374	Partial interference	7LC-C12
R3001-T12	3/8		3/8 .375	.375/.385	Clearance	7LC-C12
R3002-T12	3/8	11/32 .3438	9.4MM .3701	.369/.372	Interference	7LC-C12
R3002-T12	3/8	11/32 .3438	9.5MM .374	.372/.374	Partial interference	7LC-C12
R3002-T12	3/8		3/8 .375	.375/.385	Clearance	7LC-C12
R3007-T6	3/16	3/16 .1875	#7 .201	.2005/.2025	Interference	LC-C6
R3007-T6	3/16	3/16 .1875	13/64 .2031	.203/.205	Partial interference	LC-C6
R3007-T6	3/16		#5 .2055	.2055/.215	Clearance	LC-C6
R3008-T6	3/16	3/16 .1875	#7 .201	.2005/.2025	Interference	LC-C6
R3008-T6	3/16	3/16 .1875	13/64 .2031	.203/.205	Partial interference	LC-C6
R3008-T6	3/16		#5 .2055	.2055/.215	Clearance	LC-C6

Table XX. Lockbolts - recommended drill sizes (and collars) (cont'd)

Huck part number	Diameter (inches)	Pilot-drill		Size drill		Hole size	Remarks	Collar
R3007-T8	1/4	D	.246	6.6MM	.2598	.2595/.2615	Interference	LC-C8
R3007-T8	1/4	D	.246	G	.261	.261/.263	Partial interference	LC-C8
R3007-T8	1/4			17/64	.2656	.265/.275	Clearance	LC-C8
R3008-T8	1/4	D	.246	6.6MM	.2598	.2595/.2615	Interference	LC-C8
R3008-T8	1/4	D	.246	G	.261	.261/.263	Partial interference	LC-C8
R3008-T8	1/4			17/64	.2656	.265/.275	Clearance	LC-C8
OAL-T10	5/16	N	.302	P	.323	.3225/.3245	Interference	7LC-C10
OAL-T10	5/16	N	.302	8.25MM	.3248	.325/.327	Partial interference	7LC-C10
OAL-T10	5/16			21/64	.3281	.328/.338	Clearance	7LC-C10
OAL-T12	3/8	U	.368	9.75MM	.3839	.3835/.3855	Interference	7LC-C12
OAL-T12	3/8	U	.368	9.8MM	.3858	.386/.388	Partial interference	7LC-C12
OAL-T12				25/64	.3906	.390/.400	Clearance	7LC-C12
9L-T6	3/16			#14	.182	.181/.186	Interference	LC-C8

Table XX. Lockbolts - recommended drill sizes (and collars) (cont'd)

Huck part number	Diameter (inches)	Pilot-drill		Size drill		Hole size	Remarks	Collar
9L-T8	1/4			C	.242	.241/.246	Interference	LC-C8
10L-T6	3/16			#14	.182	.179/.186	Interference	LC-C6
10L-T8	1/4			C	.242	.238/.246	Interference	LC-C8
2L-T5	5/32	26	.147	#20	.161	.161/.1635	Interference	LC-C5
2L-T5	5/32	26	.147	4.2MM	.1654	.164/.166	Partial interference	LC-C5
2L-T5	5/32			#19	.166	.166/.171	Clearance	LC-C5
53L-DT5	5/32	9/64	.1406	#24	.152	.152/.154	Interference	6DC-C5
53L-DT5	5/32	9/64	.1406	#23	.154	.154/.156	Partial interference	6DC-C5
53L-DT5	5/32			22	.157	.157/.160	Clearance	6DC-C5
53L-DT6	3/16	18	.1695	13	.185	.185/.188	Interference	6DC-C6
53L-DT6	3/16	18	.1695	4.75MM	.187	.187/.189	Partial interference	6DC-C6
53L-DT6	3/16			11	.191	.190/.194	Clearance	6DC-C6
53L-DT8	1/4	#1	.228	D	.246	.246/.248	Interference	6DC-C8
53L-DT8	1/4	#1	.228	6.3MM	.248	.248/.250	Partial interference	6DC-C8

Table XX. Lockbolts - recommended drill sizes (and collars) (cont'd)

Huck part number	Diameter (inches)	Pilot-drill		Size drill		Hole size	Remarks	Collar
53L-DT8	1/4			1/4	.250	.250/.254	Clearance	6DC-C8
53L-DT10	5/16	L	.290	7.8MM	.3071	.307/.310	Interference	6DC-C10
53L-DT10	5/16	L	.290	7.9MM	.311	.310/.312	Partial interference	6DC-C10
53L-DT10	5/16			5/16	.3125	.3125/.3165	Clearance	6DC-C10
53L-DT12	3/8	11/32	.348	9.4MM	.3701	.369/.372	Interference	6DC-C12
53L-DT12	3/8	11/32	.348	9.5MM	.374	.372/.374	Partial interference	6DC-C12
53L-DT12	3/8			3/8	.375	.375/.379	Clearance	6DC-C12
54L-DT5	5/32	#25	.1495	Ream 4.1MM	.1614	.1614/.1619	Interference	6DC-C5
54L-DT6	3/16	#18	.1695	Ream 4.75MM	.187	.187/.1875	Interference	6DC-C6
54L-DT8	1/4	#1	.228	Ream D	.246	.2460/.2470	Interference	6DC-C8
54L-DT10	5/16	L	.290	Ream 7.8MM	.3071	.3071/.3081	Interference	6DC-C10
54L-DT12	3/8	11/32	.3438	Ream 9.4MM	.3701	.3701/.3711	Interference	6DC-C12

Table XX. Lockbolts - recommended drill sizes (and collars) (cont'd)

Huck part number	Diameter (inches)	Pilot-drill		Size drill		Hole size	Remarks	Collar
54L-DT14	7/16	A	.4130	Ream 11.0 .4331		.4331/.4341	Interference	6DC-C14
54L-DT15	1/2	12.0MM	.4724	Ream Special .495		.4950/.4960	Interference	6DC-C16
54L-DT20	5/8	19/32	.5938	Ream Special .620		.620/.6215	Interference	6DC-C20
54L-DT24	3/4	23/32	.7188	Ream Special .745		.745/.7465	Interference	6DC-C24
BP & B100-T5	5/32			#19	.166	.164/.167	Interference	None
BP & B100-T6	3/16			#8	.199	.199/.202	Interference	None
BP & B100-T8	1/4			G	.261	.260/.263		None
BP & B100-T10	5/16			5/16	.3125	.312/.315		None
BP & B100-T12	3/8			3/8	.375	.374/.378		None
NLS-EU4	1/8			3.3MM	.1299	.129/.132		None
MLS-E05	5/32			#20	.161	.160/.164		None
MLS-EU6	3/16			#10	.1935	.192/.196		None

5.6.2.2 Stump type. - To drive the stump type lockbolt refer to figure 28 and proceed as follows:

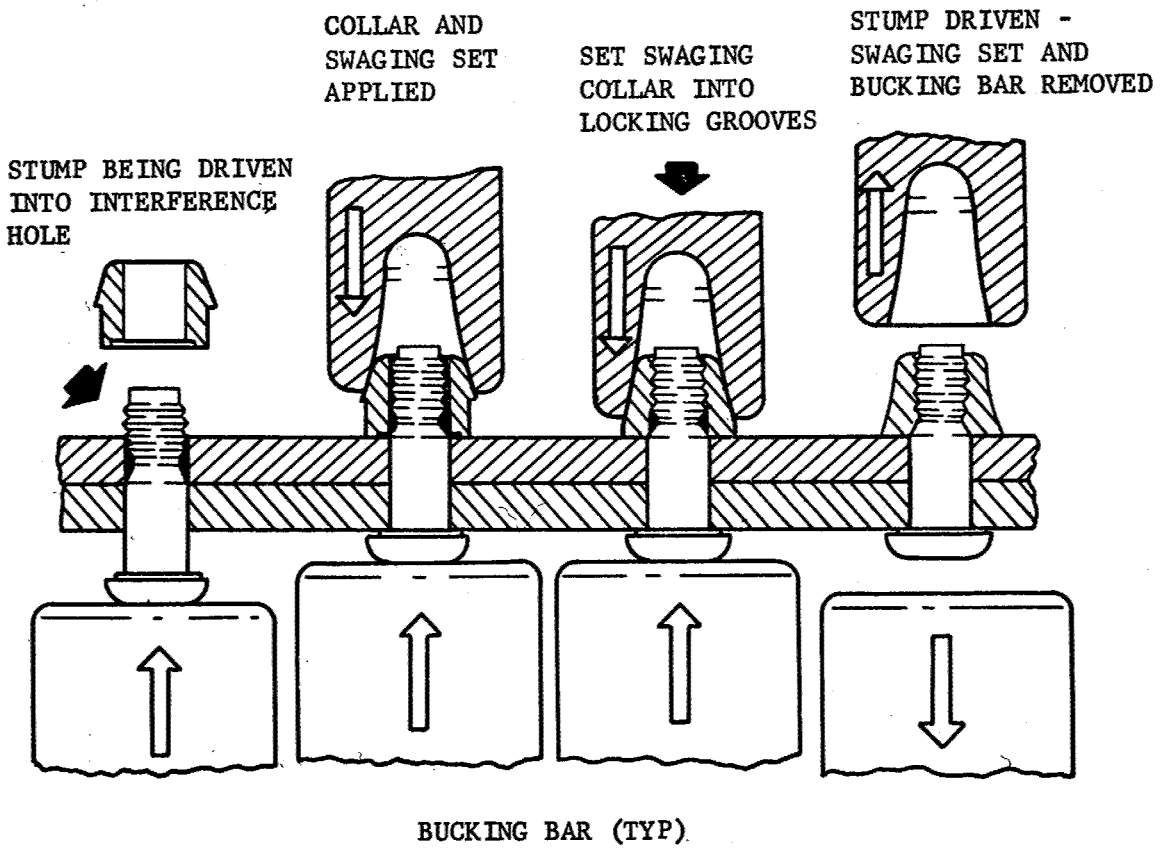

Figure 28. Driving the stump-type lockbolt.

(a) Insert the pin from one side of the work. Be sure the pin fills the hole as stump pins of alloy steel do not expand to fill oversize holes. Slip the lockbolt collar over the extending locking grooves of the pin; then place a bucking bar against the head of the pin. Be sure the sheets are clamped firmly together to avoid sheet separation. Place the swaging set over the collar, align it with the pin and apply driving pressure until the soft collar is forced into the locking grooves of the extended stump shank. If possible, hold the drive set and gun 90 degrees to the face of the work. Continue to apply pressure until the head is fully formed. The straight positions of the shank shall be flush or protrude not more than 0.032-inch from the work.

(b) Lockbolt stump collars can be driven on a surface not exceeding seven degrees from a perpendicular with axis of hole. The manufactured head of the lockbolt stump must be driven on a surface perpendicular with axis of hole. Spot face for other conditions.

5.6.2.3 Interference fits. - When an interference fit is specified, the sharp edges of the drilled or reamed hole shall be broken 0.062-inch.

5.6.3 General inspection.

5.6.3.1 Collars. - Collars cracked after swaging shall be rejected.

5.6.3.2 Head to bearing surface gap. - The presence of gaps which allow the insertion of a 0.004-inch feeler gage between the countersunk or protruding head and bearing surface shall be acceptable when no more than 40 percent of the head circumference has the gap. A tension type collar can be driven on a surface not exceeding 7 degrees from the perpendicular to threads of the hole.

5.6.3.3 Pin protrusion. - Pin protrusion ("Y" in table XXI or "H" in table XXII, depending on lockbolt type) shall be checked per figure 29 when the collar is installed against a sloping surface.

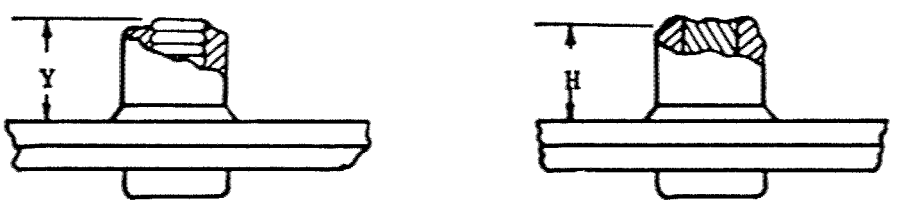

Figure 29. Pin protrusion.

5.6.3.4 Inspection dimensions - pull type lockbolts.

5.6.3.4.1 Collar swage and pin protrusion. - Check pull type lockbolt collar swage and pin protrusion dimensions to determine conformance to table XXI.

Table XXI. Gaging dimensions - pull-type lockbolts

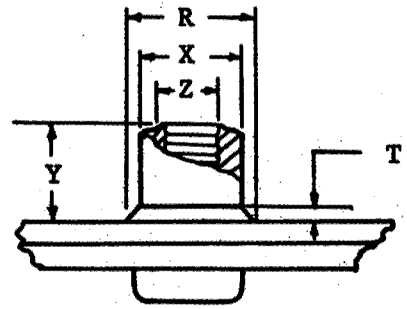

Lockbolt and collar matl.	Lockbolt dia.	X Max.	Y Limits	Z (Ref.)	R	T Min.	T Maximum
Steel pin with 2024-T4 collar or alum. pin with 5061-T6 collar	3/16	0.2812	0.291 0.190	0.165	0.304	0.013	0.039 for Y = 0.190 to 0.225 0.059 for Y = 0.226 to 0.291
	1/4	0.3672	0.396 0.278	0.225	0.401	0.011	0.039 for Y = 0.278 to 10 0.046 for Y = 0.311 to 0.396
Steel pin with 2024-T4 collar	5/16	0.4572	0.421 0.309	0.269	0.487		0.137
Steel pin with 6061-T6 collar	3/8	0.5572	0.520 0.400	0.340	0.590		0.125
Aluminum pin with 6061-T6 collar	5/16	0.4534	0.449 0.329	0.269	0.487	0.044	0.084 for Y = 0.329 to 0.348 0.094 for Y = 0.349 to 0.449
	3/8	0.5523	0.549 0.411	0.340	0.603	0.033	0.063 for Y = 0.411 to 0.444 0.083 for Y = 0.445 to 0.549

NOTE: Dimensions are in inches.

5.6.3.4.2 Collar washer. - When a washer is used under the collar, the top face shall be considered the same as the referenced sheet surface.

5.6.3.4.3 Swaged collar, grip length and appearance. - Pull type lockbolts shall be visually inspected for proper grip length and appearance of the swaged collar.

5.6.3.4.4 Inspection controversies. - If doubt or controversy does exist, inspection gages recommended by the manufacturer for the particular type of lockbolt shall be used, when available, in lieu of dimensional inspection (table XXI). The recommended inspection gages for pull type lockbolts are shown in table XXIII.

5.6.3.5 Inspection dimensions - stump type lockbolts.

5.6.3.5.1 Collar swage and pin protrusion. - Stump type lockbolt collar swage and pin protrusion dimensions shall be checked to determine conformance to table XXII.

5.6.3.5.2 Collar washer. - When a washer is used under the collar, the top face shall be considered the same as the referenced sheet surface.

5.6.3.5.3 Swaged collar, grip length and appearance. - Stump-type lockbolts shall be visually inspected for proper grip length and appearance of the swaged collar.

5.6.3.5.4 Inspection controversies. - If doubt or controversy does exist, inspection gages recommended by the manufacturer for the particular type of lockbolt shall be used, when available, in lieu of dimensional inspection (table XXII).

5.7 Pull fasteners.

5.7.1 Use of installation tools. - Figure 30 shows how installation tools shall be used to expand full rivets.

5.7.2 Trim of self-plugging pull rivets. - Fractured stem of self-plugging pull rivets shall be trimmed with flat ground nippers as illustrated in figure 31. Chisel or curved nippers shall not be used.

5.7.3 Tapping or hitting heads. - Tapping or hitting the heads of installed rivets shall not be permitted since this will produce loose heads.

5.7.4 Inspection of pull fasteners.

5.7.4.1 Tulip shaped end. - A "tulip shaped" end is formed when pull rivets expand. If the blind end is visible after installation,

Table XXII. Gaging dimensions - lockbolt stumps

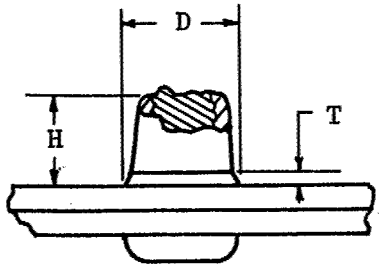

Steel lockbolt size	T Maximum	D Maximum	H	
			Minimum	Maximum
3/16	0.0595	0.2982	0.212	0.298
1/4	0.0805	0.3952	0.283	0.377
5/16	0.1075	0.4872	0.383	0.445
3/8	0.1575	0.5902	0.483	0.545

NOTE: Dimensions are in inches.

Table XXIII. Recommended inspection gages for pull-type lockbolts

Lockbolt		Inspection gage
Huck Manufacturing part number*	Diameter inches	
ALPP	3/16	HG 85-10
ALPP	1/4	HG 85-2
BL-8	1/4	L6 HG-85-10
BL-10	5/16	L8 HG-85-2
R3002-T6	3/16	HG 85-10
R3002-T6	1/4	HG 85-2
R3002-T10	5/16	HG 85-8
R3002-T12	3/8	HG 85-9

*Gages listed above are available from the Huck Manufacturing Company, 2480 Bellevue Avenue, Detroit 7, Michigan.

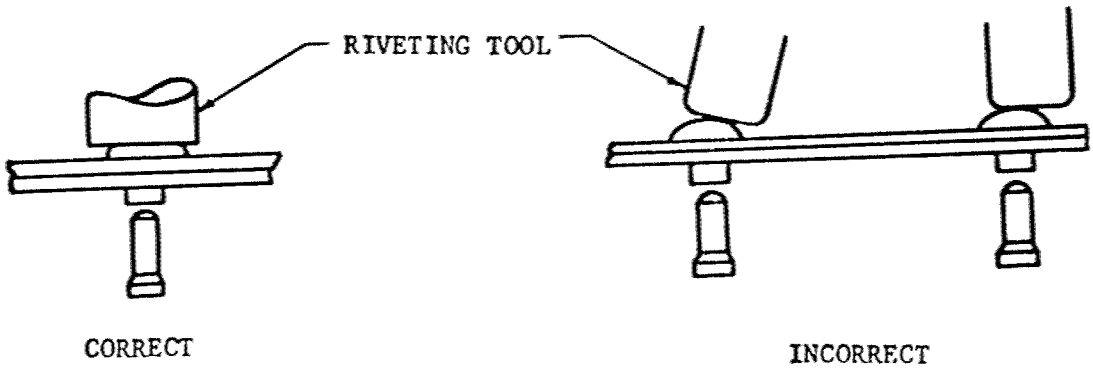

Figure 30. Installation of pull rivets.

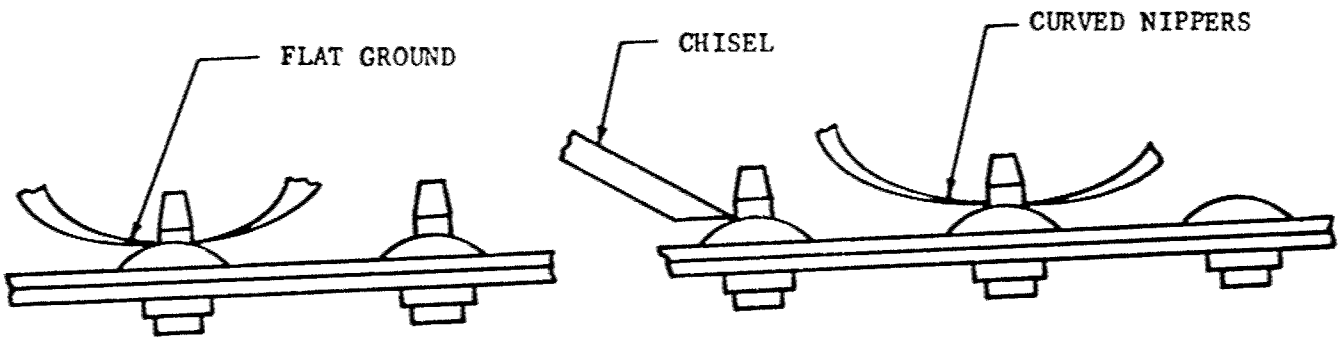

Figure 31. Trim of self-plugging pull rivets.

rivet shall be inspected for proper head formation and, in case of the self-plugging rivets, for position of stem end in relation to end of rivet sleeve shall be as shown in figure 32.

5.7.4.2 Splits or cracks. - Splits or cracks (resulting from driving) shall not be acceptable in more than five percent of the expanded self-plugging type rivets.

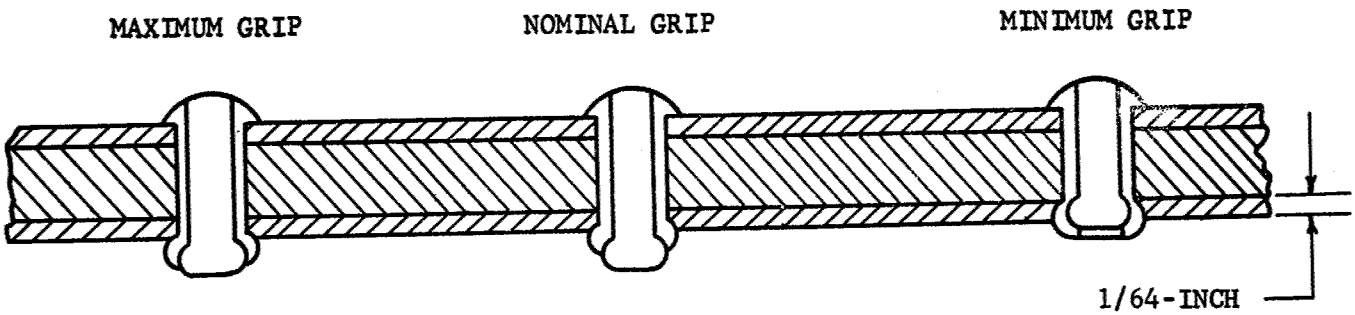

Figure 32. Tulip shaped end.

5.7.4.3 Self-plugging pull rivet installation. - For self-plugging pull rivet installation, whether blind end is visible or not, installed rivet shall be inspected from open side before trimming off broken stem. Enlarged portion of the stem shall be visible for a minimum of 1/32-inch above the manufactured rivet head. In addition, for rivets in clusters covering the same grip, the stem shall be of a reasonable uniform height above the work surface. When the enlarged portion does not protrude through 1/32-inch, the hole is too small or the rivet is too short and it shall be replaced (see figure 33).

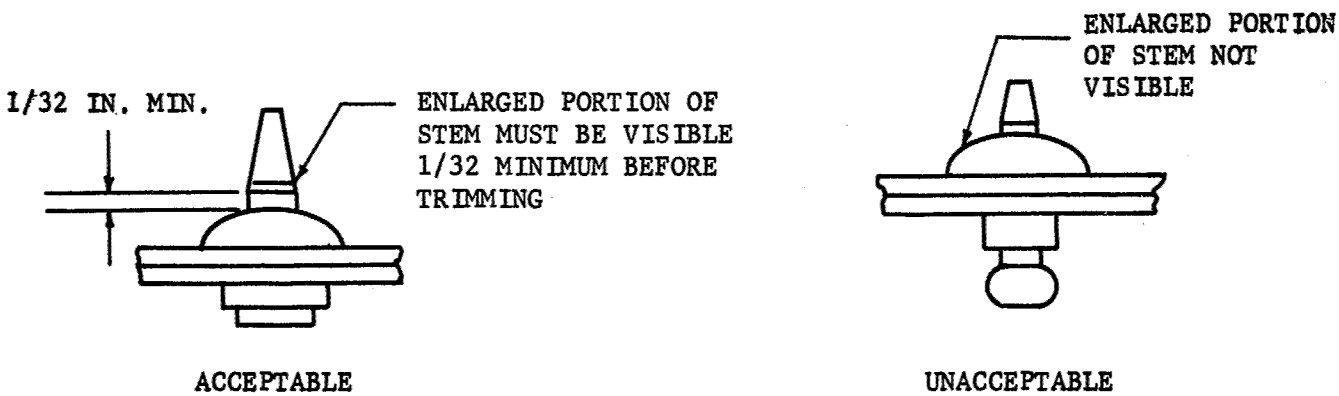

Figure 33. Trimming of stem.

5.7.4.4 Push-out test. - Self-plugging rivets shall be examined by a stem "push-out" test method, several hours after installation is preferred, by applying a minimum force of ten pounds to the terminal stem. If the rivet stem is loose or can be pushed out, the rivet hole is too large or the rivet is too long. The rivet should be removed and replaced by the next larger size or the next shorter length. Approval from the designer shall be obtained before any change is made.

5.8 Installation of Deutsch drive-pins.

5.8.1 Sheet preparation. - Drilling shall be carefully done. Effort shall be made to keep the hole as round as possible and at right angles to the surface of the work. Excessive burrs shall be removed. Hole size shall be in accordance with table XXIV.

5.8.2 Machine countersinking. - Machine countersinking shall be carefully done. Work shall be free from tilted, elongated or excessively deep countersinks. Countersink diameters which will permit the flush head to seat flush within (plus or minus 0.005-inch) shall be as given in table XXIV.

Table XXIV. Hole sizes - Deutsch drive pins

Rivet dia.	Hole size	Countersink dia.
.1885-.1915	.190-.194	.294-.304
.257 -.260	.260-.265	.387-.397
.313 -.316	.315-.320	.466-.476
.383 -.386	.385-.390	.554-.564

NOTE: Dimensions are in inches.

5.8.3 Driving the rivets. - Rivets shall be driven with a hand hammer, or with a light riveting gun with a flat set. As the pin is driven into the rivet, the sleeve is expanded to form a blind head and the lip section is peened over and smoothed out using a very slight rolling action of the driving tool. Peening the lip securely locks the pin in the sleeve. Do not drive the rivets into tight holes by driving on the pins as this will cause premature expansion of the blind head. Use a hollow drift which will clear the pin and lip sections.

5.8.4 Inspection.

5.8.4.1 Visual inspection. - Where the blind side of the work is visible after riveting, the expanded head shall be visually inspected.

5.8.4.2 Inspection conditions. - The conditions illustrated in figure 34 shall be used for inspection of driven rivets. Flush heads shall not protrude more than 0.010-inch above flush. Flush heads shall not fall more than 0.006 below flush. Brazier and flush head fasteners having a gap under one side of the head which will permit insertion of a 0.005 feeler gage to the shank shall be rejected. Gaps which will permit insertion of a 0.004 feeler are acceptable provided no more than 10 percent of the circumference has a gap. Locking lip shall be securely and smoothly peened over the head.

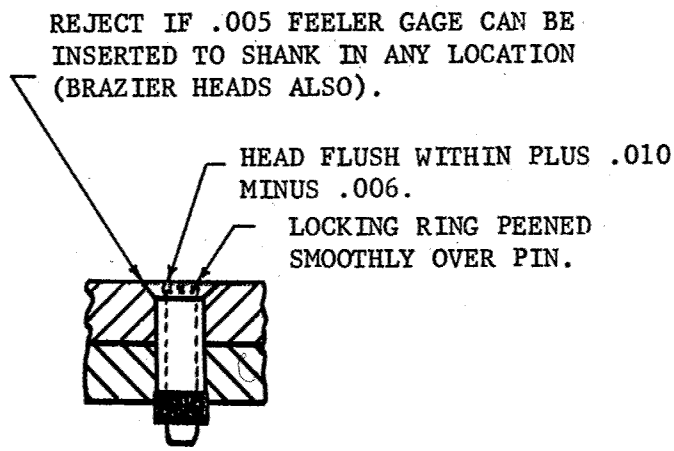

Figure 34. Acceptability limits.

5.8.5 Removal of rivets.

5.8.5.1 Removing rivets from thru holes. - The removal of rivets from thru holes shall be as illustrated and described in figure 35.

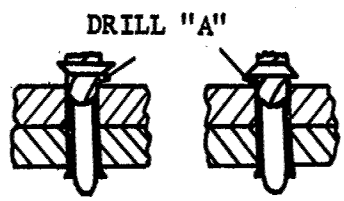

Step 1: Make sure rivet is not buried. Drill off head with drill size "A".

Figure 35. Removing rivets from thru holes. (Cont'd on following page)

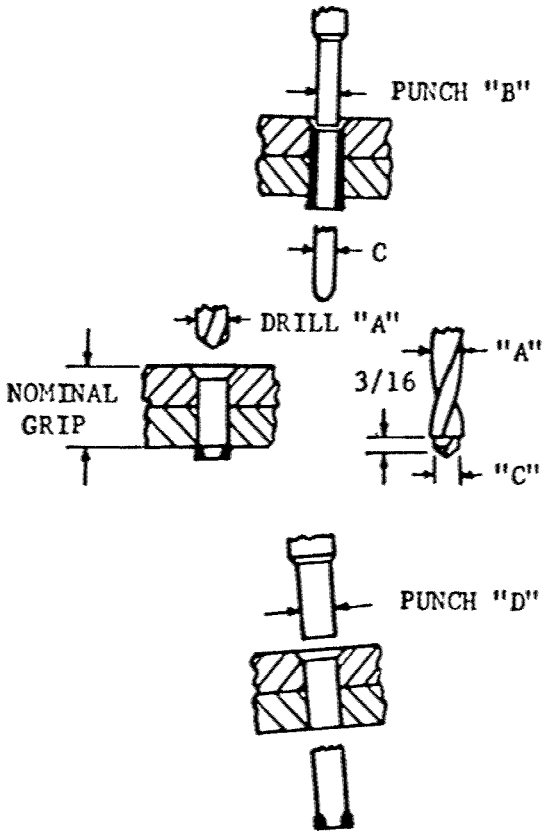

Step 2: Drive pin through using punch "E". See tabulation for size "C".

Step 3: Drill sleeve using drill "A" to nominal grip depth only.

Step 4: Drive remainder of sleeve through using punch "D".

Deutsch Rivet size	Drill size "A"	Panel size "B"	Pin size "C" ±.001	Punch size "D"	Re-drill size "E"	Ezy-out "F"	Ezy-out "G"
3/16	11/64	3/32	.1215	5/32	-	No. 1	No. 3
1/4	1/4	1/8	.1625	7/32	No. 30 .1285	No. 2	No. 4
5/16	17/64	5/32	.1975	1/4	5/32	No. 3	No. 5
3/8	11/32	7/32	.2425	11/32	13/64	No. 4	No. 5
1/2	13/32	9/32	.3235	7/16	17/64	No. 5	No. 6

NOTE: Dimensions are in inches.

Figure 35. Removing rivets from thru holes.

5.8.5.2 Removing rivets from blind holes. - The removal of rivets from blind holes shall be as illustrated and described in figure 36.

5.8.5.2.1 Alternate method for removal of rivets from blind holes. - The alternate method for removing rivets from blind holes is illustrated in figure 37.

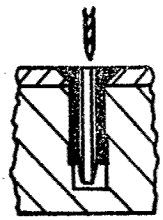

Step 1: Drill no. 40 (.098) pilot hole full length of the drive pin, centering drill accurately and maintaining existing drill angle. Redrill through pilot in drive pin to the diameter in figure 35 (6) E (not required on 3/16-inch diameter rivet). (If pin should spin use larger drill slightly off center, drill as far as possible and drive remainder into recess.)

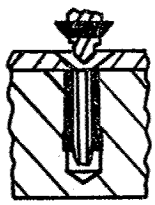

Step 2: Re-drill per diameter in figure 35 (6) A to depth of the head only and pry off the head.

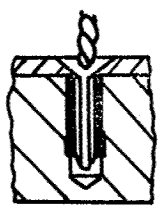

Step 3: Insert an Ezy-out screw extractor size indicated in figure 35 (6) F and pull out remaining shell of drive pin with a rotary motion using pliers or drill chuck as a puller.

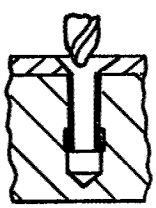

Step 4: Re-drill down through rivet shank using a thru flute drill with the diameter indicated in figure 35 (6) A and having an end pilot ground to dimensions in figure 35 (4).

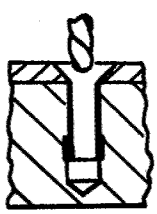

Step 5: Insert an Ezy-out screw extractor, size indicated in figure 35 (6) G and pull out remaining rivet shank shell. (If difficulty is experienced with spinning or hard removal, a chisel, if used with care, can be used to split the shell. The segments can be pried out.)

Figure 36. Removing rivet from blind holes.

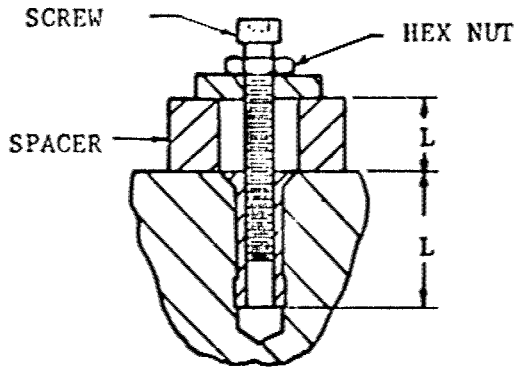

NOTE:

Drill out pin. Drill at slow speed with light pressure. If pin or sleeve spins during drilling, drill at slight angle to axis. For 5/16-inch and 3/8-inch diameter fasteners, the pin may be removed first by drilling out lock, then drilling No. 33 hole, for tapping for No. 6-32 and drawing pin as noted in illustration.

Fastener size	3/16	1/4	5/16*	3/8*
Drill size	#27	#19	#1	G
Tap size	8-32	10-32	1/4-28	5/16-24
Screw size	8-32	10-32	1/4-28	5/16-24

*For 5/16 and 3/8 inch use hardened cap screw.

Figure 37. Alternate method for removing blind rivets.

5.9 Skin deformation. - Gap between the joined sheets, bulges due to an internally expanded rivet, or chips trapped between the sheets shall be cause for rejection.

5.10 Countersinking.

5.10.1 Hi-shear rivet. - The holes for flush head hi-shear rivets shall be countersunk, using 100 degree countersink tools, to the countersink dimensions specified in tables XXV, XXVI, and XXVII. All countersinks shall be concentric with the rivet hole and free from cracks (see paragraph 5.3).

5.10.2 Nominal diameters for countersinks. - The nominal diameters for countersinks are given in table XXVIII. These dimensions are given for reference only since the flushness requirements are given in the paragraphs giving installation requirements. All countersinks listed have an included angle of 100 degrees.

GEORGE C. MARSHALL SPACE FLIGHT CENTER

NATIONAL AERONAUTICS AND SPACE ADMINISTRATION

HUNTSVILLE, ALABAMA

RIVETING, FABRICATION AND INSPECTION, STANDARD FOR

This amendment forms a part of George C. Marshall Space Flight Center (MSFC) Standard MSFC-STD-156, April 2, 1962; has been approved by MSFC; and is mandatory for use by MSFC and allied contractors.

(1) Page 5, add the following new paragraph:

"4.8 Heating and refrigeration of rivets. - Rivets of alloys 2017-T4, 2024-T4, and 6061 shall be furnished in a heat-treated condition. The small size rivets shall be driven cold, as received, without reheat treatment. However, to make the larger size rivets easier to drive, they shall be reheat-treated just prior to use. The reheat treatment process, according to the alloy, shall be as follows:

(a) Alloy 2017-T4 shall be reheated to a temperature of 930 to 950 degrees Fahrenheit (F) 5 to 30 minutes, depending on the size and number, and then shall be quenched immediately in cold water.

(b) Alloy 2024-T4 shall be reheated to a temperature of 910 to 930 degrees F.

(c) Alloy 6061 shall be reheated to a temperature of 1030 to 1050 degrees F for 10 to 30 minutes, depending on the size and number."

"4.9 Low temperature storing. - If heat treated rivets are allowed to age more than two hours after quenching, they are often too hard to drive and shall be reheat-treated prior to use. However, the aging process can be retarded by storing the quenched rivets at low temperatures. Rivets stored at 32 degrees F immediately after quenching remain soft enough for driving for approximately 36 hours. By using dry ice (CO_2) or mechanical refrigeration to maintain a temperature of minus 50 degrees F, rivets remain soft enough for driving for a period of two weeks."

(2) Page 28, table XIII, the drill size changes to "Rivet hole size and hole tolerances for Standard MS20426 and MS20470 type rivets," shall be made within the standard for the rivet diameters indicated:

Diameter	Drill size
5/16	From 0.316 (No. O) To 0.323 (No. P)
3/8	From 0.377 (No. V) To 0.383 (No. W)

(3) Pages 40 through 46, table XX shall be deleted and substituted by pages 2 through 8, table XX of this document.

(4) Page 49, table XXI shall be deleted and substituted by page 9, table XXI of this document.

(5) Page 50, paragraph 5.6.3.4.4 shall be deleted and substituted by the following paragraph: 5.6.3.4.4 Inspection. - When inspection is required, the inspection gages specified in table XX shall be used.

(6) Page 50, paragraph 5.6.3.5.4 shall be deleted and substituted by the following paragraph: 5.6.3.5.4 Inspection. - When inspection is required, the inspection gages specified in table XX shall be used.

(7) Page 51, table XXII shall be deleted and substituted by page 10, table XXII of this document .

(8) Page 51, table XXIII shall be deleted and substituted by page 11, table XXIII of this document.

Table XX(a). Fasteners - recommended drill sizes (and collars).

Manufacturer number	Diameter (inches)	Pilot drill	Size drill	Hole size	Remarks	Collar
2LP-T5			Obsolete - replace with			R3001-T5
2L425-T5			"	"	"	R3002-T5
ALPP-T6			"	"	"	R3001-T6
ALPP-T8			"	"	"	R3001-T8
ALP426-T6			"	"	"	R3014-T6
ALP426-T8			"	"	"	R3014-T8
R1029-T10	5/16	----------	"	"	"	R3002-T10
R1029-T12	3/8	----------	"	"	"	R3002-T12
R1028-T10	5/16	----------	"	"	"	R3001-T10
R1028-T12	3/8	----------	"	"	"	R3001-T12
ACT509-T6	3/16	----------	"	"	"	R3002-T6
ACT509-T8	1/4	----------	"	"	"	R3002-T8
R3007-T10		----------	"	"	"	OALP-T10
R3007-T12		----------	"	"	"	OALP-T12
R3008-T10		----------	"	"	"	OAL509-T10
R3008-T12		----------	"	"	"	OAL509-T12

Table XX(b). Fasteners - recommended drill sizes, collars, and gages.

Manufacturers number	NAS number	Nominal Diameter	Pilot drill		Ream or size drill		Hole size	Remarks	Gage no.	Collar & NAS no.
BP&B100-T5		5/32	#25	.1495	#19	.166	.164/.167	Blind bolts		None
BP&B100-T6		3/16	#15	.180	#8	.199	.199/.202	Blind bolts		None
BP&B100-T8		1/4	D	.246	G	.261	.260/.263	Blind bolts		None
BP&B100-T10		5/16	L	.290	5/16	.3125	.312/.315	Blind bolts		None
BP&B100-T12		3/8	S	.348	3/8	.375	.374/.378			None
BP&B100-EU5		5/32	#25	.1495	#19	.166				
BP&B100-EU6		3/16								
BP&B100-EU8		1/4								
BP&B100-EU10		5/16								
BP&B100-EU12										
MLS-EU4		1/8			3.3mm	.1299	.129/.132	Blind rivets		None
MLS-EU5		5/32			#20	.161	.160/.164	Blind rivets		None
MLS-EU6		3/16			#16	.1935	.192/.196	Blind rivets		None
OAL-T10		5/16	"N"	.302	P	.323	.3225/.3245	Interference Partial		7LC-C10 (NAS1080)
OAL-T10		5/16	"N"	.302	8.25mm	.3248	.325/.327	Interference		7LC-C10
OAL-T10		5/16			21/64	.3281	.328/.338	Clearance		7LC-C10
OAL-T12		3/8	"U"	.368	9.75mm	.3839	.3835/.3855	Interference Partial		7LC-C12 (NAS1080P12)
OAL-T12		3/8	"U"	.368	9.8mm	.3858	.386/.388	Interference		7LC-C12
OAL-T12		3/8			25/64	.3906	.390/.400	Clearance		7LC-C12
R3001-T5	NAS1465	5/32	#26	.147	#20	.161	.161/.1635	Interference Partial	HG85-12	LC-C5 (NAS1080-5)
R3001-T5		5/32	#26	.147	4.2mm	.1654	.164/.166	Interference		LC-C5
R3001-T5		5/32			#19	.166	.166/.171	Clearance	HG85-12	LC-C5
R3001-T6	NAS1466	3/16	#18	.1695	#13	.185	.185/.188	Interference Partial	HG85-10	LC-C6 (NAS1080-6)
R3001-T6		3/16	#18	.1695	4.75mm	.187	.187/.189	Interference	HG85-10	LC-C6
R3001-T6		3/16			#11	.191	.190/.200	Clearance	HG85-10	LC-C6
R3001-T8	NAS1468	1/4	#1	.228	6.2mm	.2441	.244/.247	Interference Partial	HG85-2	LC-C8 (NAS1080-8)
R3001-T8		1/4	#1	.228	6.3mm	.248	.247/.249	Interference		LC-C8

Table XX(b). Fasteners - recommended drill sizes, collars, and gages (cont'd)

Manufacturers number	NAS number	Nominal Diameter	Pilot drill		Ream or size drill		Hole size	Remarks	Gage no.	Collar & NAS no.
R3001-T8		1/4			1/4	.250	.250/.260	Clearance	HG85-2	LC-C8
R3001-T10	NAS1470	5/16	"L"	.290	7.8mm	.3071	.307/.310	Interference Partial	HG85-8	7LC-C10 (NAS1080P10)
R3001-T10		5/16	"L"	.290	7.9mm	.311	.310/.312	Interference	HG85-8	7LC-C10
R3001-T10		5/16			5/16	.3125	.3125/.322	Clearance	HG85-8	7LC-C10
R3001-T12	NAS1472	3/8	11/32	.3438	9.4mm	.3701	.369/.372	Interference Partial	HG85-9	7LC-C12 (NAS1080P12)
R3001-T12		3/8	11/32	.3438	Ream	.372	.372/.374	Interference	HG85-9	7LC-C12
R3001-T12		3/8			3/8	.375	.375/.385	Clearance	HG85-9	7LC-C12
R3002-T6	NAS1456	3/16	#18	.1695	#13	.185	.185/.188	Interference Partial	HG85-10	LC-C6 (NAS1080-6)
R3002-T6		3/16	#18	.1695	4.75mm		.187/.189	Interference	HG85-10	LC-C6
R3002-T6		3/16			#11	.191	.190/.200	Clearance	HG85-10	LC-C6
R3002-T8	NAS1458	1/4	#1	.228	6.2mm	.2441	.244/.247	Interference Partial	HG85-2	LC-C8 (NAS1080-8)
R3002-T8		1/4	#1	.228	6.3mm	.248	.247/.249	Interference	HG85-2	LC-C8
R3002-T8		1/4			1/4	.250	.250/.260	Clearance	HG85-2	LC-C8
R3002-T10	NAS1460	5/16	"L"	.290	7.8mm	.3071	.307/.310	Interference Partial	HG85-8 HG85-8	7LC-C10 (NAS1080P10)
R3002-T10		5/16	"L"	.290	7.9mm	.311	.310/.312	Interference	HG85-8	7LC-C10
R3002-T10		5/16			5/16	.3125	.3125/.322	Clearance		7LC-C10
R3002-T12	NAS1462	3/8	11/32	.3438	9.4mm	.3701	.369/.372	Interference Partial	HG85-9	7LC-C12 (NAS1080P12)
R3002-T12		3/8	11/32	.3438	9.5mm	.374	.372/.374	Interference		7LC-C12
R3002-T12		3/8			3/8	.375	.375/.385	Clearance		7LC-C12
R3007-T6		3/16	3/16	.1875	#7	.201	.2005/.2025	Interference Partial	HG85-10	LC-C6 (NAS1080-6)
R3007-T6		3/16	3/16	.1875	13/64	.2031	.203/.205	Interference		LC-C6
R3007-T6		3/16			#5	.2055	.2055/.215	Clearance		LC-C6
R3007-T8		1/4	"D"	.246	6.6mm	.2598	.2595/.2615	Interference Partial	HG85-2	LC-C8 (NAS1080-8)
R3007-T8		1/4	"D"	.246	"G"	.261	.261/.263	Interference		LC-C8

Table XX(b). Fasteners - recommended drill sizes, collars, and gages (cont'd)

Manufacturers number	NAS number	Nominal diameter	Pilot drill		Ream or size drill		Hole size	Remarks	Gage no	Collar & NAS no
R3007-T8		1/4			17/64	2656	.265/.275	Clearance		LC-C8
R3007-T10		5/16	"N"	302	"P"	323	.3225/.3245	Interference	HG85-5	LC-C10
								Partial		(NAS1080-10)
R3007-T10		5/16	"N"	302		3281	.325/.327	Interference		LC-C10
R3007-T10		5/16			21/64	.3281	.328/.338	Clearance	HG85-5	LC-C10
R3007-T12		3/8	"U"	.368	9.75mm	.3839	.3835/.3855	Interference	HG85-6	LC-F12
								Partial		(NAS1080D12)
R3007-T12		3/8	"U"	.368	9.8mm	.3858	.386/.388	Interference		LC-F12
R3007-T12		3/8			25/64	3906	.390/.400	Clearance		LC-F12
R3008-T6		3/16	3/16	.1875	No. 7	.201	.2005/.2025	Interference	HG85-10	LC-C6
								Partial		(NAS1080-6)
R3008-T6		3/16	3/16	.1875	13/64	.2031	.203/.205	Interference		LC-C6
R3008-T6		3/16	3/16		No. 5	2055	.2055/.215	Clearance		LC-C6
R3008-T8		1/4	"D"	.246	6.6mm	.2598	.2595/.2615	Interference	HG85-2	LC-C8
								Partial		(NAS1080-8)
R3008-T8		1/4	"D"	.246	"G"	.261	.261/.263	Interference		LC-C8
R3008-T8		1/4			17/64	2656	.265/.275	Clearance		LC-C8
R3008-T10		5/16	"N"	.302	"P"	.323	.3225/.3245	Interference	HG85-5	LC-C10
								Partial		(NAS1080-10)
R3008-T10		5/16	"N"	.302	8.25mm	.3248	.325/.327	Interference		LC-C10
R3008-T10		5/16			21/64	.3281	.328/.338	Clearance		LC-C10
R3008-T12		3/8	"U"	.368	9.75mm	.3839	.3835/.3855	Interference	HG85-6	LC-F12
								Partial		(NAS1080D12)
R3008-T12		3/8	"U"	.368	9.8mm	.3858	.386/.388	Interference		LC-F12
R3008-T12		3/8			25/64	.3906	.390/.400	Clearance		LC-F12
R3020-T6		3/16	3/16	.1875	No. 7	.201	.2005/.2025	Interference	HG85-10	LC-C6
								Partial		(NAS1080-6)
R3020-T6		3/16	3/16	.1875	13/64	.2031	.203/.205	Interference		LC-C6
R3020-T6		3/16			No. 5	.2055	.2055/.215	Clearance		LC-C6
R3020-T8		1/4	"D"	.246	6.6mm	.2598	.2598/.2615	Interference	HG85-2	LC-C8

Table XX(b). Fasteners - recommended drill sizes, collars, and gages (cont'd)

Manufacturers number	NAS number	Nominal diameter	Pilot drill		Ream or size drill		Hold size	Remarks	Gage no.	Collar & NAS no.
								Partial		(NAS1080-8)
R3020-T8		1/4	"D"	.246	"G"	.261	.261/.263	Interference		LC-C8
R3020-T8		1/4			17/64	.2656	.265/.275	Clearance		LC-C8
R3020-T10		5/16	"N"	.302	"P"	.323	.3225/.3245	Interference	HG85-8	7LC-C10
								Partial		(NAS1080P10)
R3020-T10		5/16	"N"	.302	8.25mm	.3248	.325/.327	Interference		7LC-C10
R3020-T10		5/16			21/64	.3281	.328/.338	Clearance		7LC-C10
R3020-T12		3/8	"U"	.368	9.75mm	.3839	.3835/.3855	Interference	HG85-9	7LC-C12
								Partial		(NAS1080P12)
R3020-T12		3/8	"U"	.368	9.8mm	.3858	.386/.388	Interference		7LC-C12
R3020-T12		3/8			25/64	.3906	.390/.400	Clearance	HG85-9	7LC-C12
SLSP-T4	NAS1424	1/8	7/64	.1094	3.1mm	.122	.122/.1235	Interference	HG75-6	DC-C4
								Partial		(NAS1080C4)
SLSP-T4		1/8	7/64	.1094	1/8	.125	.1235/.126	Interference		DC-2R4
SLSP-T4		1/8			No. 30	.1285	.128/.138	Clearance		(NAS1080E4)
SLSP-T5	NAS1425	5/32	9/64	.1406	No. 24	.152	.152/.1545	Interference	HG75-5	DC-C5
								Partial		(NAS1080C5)
SLSP-T5		5/32	9/64	.1406	5/32	.1562	.1545/.157	Interference		DC-2R5
SLSP-T5		5/32			No. 21	.159	.159/.169	Clearance		(NAS1080E5)
SLSP-T6	NAS1426	3/16	#18	.1695	No. 13	.185	.185/.188	Interference	HG75-1	6LC-C6
								Partial		(NAS1080C6)
SLSP-T6		3/16	#18	.1695	4.75mm	.187	.187/.189	Interference		6LC-2R6
SLSP-T6		3/16			No. 11	.191	.190/.200	Clearance		(NAS1080E6)
SLSP-T8	NAS1428	1/4	#1	.228	"D"	.246	.246/.248	Interference	HG75-2	6LC-C8
								Partial		(NAS1080C8)
SLSP-T8		1/4	#1	.228	6.3mm	.248	.248/.250	Interference		6LC-2R8
SLSP-T8		1/4			1/4	.250	.250/.260	Clearance		(NAS1080E8)
SLSP-T10	NAS1430	5/16	"L"	.290	7.8mm	.3071	.307/.310	Interference	HG75-3	6LC-C10
								Partial		(NAS1080C10)
SLSP-T10		5/16	"L"	.290	7.9mm	.311	.310/.312	Interference		6LC-2R10
SLSP-T10		5/16			5/16	.3125	.3125/.322	Clearance		(NAS1080E10)

Table XX(b) Fasteners - recommended drill sizes, collars, and gages (cont'd)

Manufacturers number	NAS number	Nominal diameter	Pilot drill		Ream or size drill		Hold size	Remarks	Gage no	Collar & NAS no
SLSP-T12	NAS1432	3/8	11/32	.3438	9.4mm	.3701	.369/.372	Interference Partial	HG75-4	6LC-C12 (NAS1080C12)
SLSP-T12		3/8	11/32	.3438	9.5mm	.374	.372/.374	Interference		6LC-2R12
SLSP-T12		3/8			3/8	.375	.375/.385	Clearance		(NAS1080E12)
S3LP-DT4		1/8	#35	.1100	3.1mm	.122	.122/.124	Interference Partial	HG90-4	6DC-C4
S3LP-DT4		1/8	#35	.1100	1/8	.125	.124/.126	Interference		6DC-C4
S3LP-DT4		1/8			3.2mm	.126	.126/.129	Clearance		6DC-C4
S3LP-DT5		5/32	9/64	.1406	#24	.152	.152/.154	Interference Partial	HG90-5	6DC-C5
S3LP-DT5		5/32	9/64	.1406	#23	.154	.154/.156	Interference		6DC-C5
S3LP-DT5		5/32			#22	.157	.157/.160	Clearance		6DC-C5
S3LP-DT6		3/16	#18	.1695	13	.185	.185/.188	Interference Partial	HG90-6	6DC-C6
S3LP-DT6		3/16	#18	.1695	4.75mm	.187	.187/.189	Interference		6DC-C6
S3LP-DT6		3/16			11	.191	.190/.194	Clearance	HG90-6	6DC-C6
S3LP-DT8		1/4	#1	.228	"D"	.246	.246/.248	Interference Partial	HG90-8	6DC-C8
S3LP-DT8		1/4	#1	.228	6.3mm	.248	.248/.250	Interference		6DC-C8
S3LP-DT8		1/4			1/4	.250	.250/.254	Clearance		6DC-C8
S3LP-DT10		5/16	"L"	.290	7.8mm	.3071	.307/.310	Interference Partial	HG90-10	6DC-C10
S3LP-DT10		5/16	"L"	.290	7.9mm	.311	.310/.312	Interference		6DC-C10
S3LP-DT10		5/16			5/16	.3125	.3125/.3165	Clearance		6DC-C10
S3LP-DT12		3/8	11/32	.3438	9.4mm	.3701	.369/.372	Interference Partial	HG90-12	6DC-C12
S3LP-DT12		3/8	11/32	.3438	9.5mm	.374	.372/.374	Interference		6DC-C12
S3LP-DT12		3/8			3/8	.375	.375/.379	Clearance		6DC-C12
S3LP-DT16		1/2	12.0mm	.4724	Special	.495	.4950/.4960	Interference	HG90-16	6DC-C16
S3LP-DT16		1/2			1/2	.500	.500/.505	Clearance	HG90-16	6DC-C16

Table XX(b). Fasteners - recommended drill sizes, collars, and gages (cont'd)

Manufacturers number	NAS number	Nominal diameter	Pilot drill		Ream or size drill		Hold size	Remarks	Gage no.	Collar & NAS no.
S3LP-DT20	5/8	5/8	19/32	.5938	Special	.620	.6200/.6215	Interference	HG90-20	6DC-C20
S3LP-DT20		5/8			5/8	.625	.625/.630	Clearance	HG90-20	6DC-C20
S3LP-DT24		3/4	22/32	.7188	Special	.745	.7450/.7465	Interference	HG90-24	6DC-C24
S3LP-DT24		3/4			3/4	.750	.750/.755	Clearance	HG90-24	6DC-C24
S3L-EU4		1/8	#35	.1100	3.1mm	.122	.122/.1235	Interference	HG90-4	6DC-EU4
S3L-EU4		1/8			3.2mm	.126	.126/.129	Clearance	HG90-4	6DC-EU4
S3L-EU5		5/32	9/64	.1406	#24	.152	.152/.154	Interference	HG90-5	6DC-EU5
S3L-EU5		5/32			#22	.157	.157/.160	Clearance	HG90-5	6DC-EU5
S3L-EU6		3/16	#18	.1695	4.75mm	.187	.1870/.1880	Interference	HG90-6	6DC-EU6
S3L-EU6		3/16			#11	.191	.190/.194	Clearance	HG90-6	6DC-EU6
S3L-EU8		1/4	#1	.228	"G"	.246	.2460/.2470	Interference	HG90-8	6DC-EU8
S3L-EU8		1/4			1/4	.250	.250/.254	Clearance	HG90-8	6DC-EU8
S3L-EU10		5/16	"L"	.290	7.8mm	.3071	.3071/.3081	Interference	HG90-10	6DC-EU10
S3L-EU10		5/16			5/16	.3125	.3125/.3165	Clearance	HG90-10	6DC-EU10
S3L-EU12		3/8	11/32	.3438	9.4mm	.3701	.3701/.3711	Interference	HG90-12	6DC-EU12
S3L-EU12		3/8			3/8	.375	.375/.379	Clearance	HG90-12	6DC-EU12
2LS509-T6	NAS1486	3/16	#18	.1695	#13	.185	.185/.188	Interference Partial	HG34D-2	LC-C6 (NAS1080-6)
2LS509-T6		3/16	#18	.1695	4.75mm	.187	.187/.189	Interference		LC-R6
2LS509-T6		3/16			#11	.191	.190/.200	Clearance		(NAS1080R6)
2LS509-T8	NAS1488	1/4	#1	.228	6.2mm	.2441	.244/.247	Interference Partial	HG34D-4	LC-C8 (NAS1080-8)
2LS509-T8		1/4	#1	.228	6.3mm	.248	.247/.249	Interference		LC-R8 (NAS1080R8)
2LS509-T8		1/4			1/4	.250	.250/.260	Clearance		(NAS1080R8)
2LS509-T10	NAS1490	5/16	"L"	.290	7.8mm	.3071	.307/.310	Interference Partial	HG34D-6	LC-C10 (NAS1080-10)
2LS509-T10		5/16	"L"	.290	7.9mm	.311	.310/.312	Interference		LC-C10
2LS509-T10		5/16			5/16	.3125	.3125/.322	Clearance		LC-C10
2LS509-T12	NAS1492	3/8	11/32	.3438	9.4mm	.3701	.369/.372	Interference	HG34D-8	LC-C12

Table XX(b). Fasteners - recommended drill sizes, collars, and gages (cont'd)

Manufacturers number	NAS number	Nominal diameter	Pilot drill		Ream or size drill		Hold size	Remarks	Gage no	Collar & NAS no
2LS509-T12		3/8	11/32	.3438	9.5mm	.374	.372/.374	Partial Interference		(NAS1080-12) LC-C12
2LS509-T12		3/8			3/8	.375	.375/.385	Clearance		LC-C12
9L-T6		3/16			#14	.182	.181/.186	Interference		LC-C6 (NAS1080-6)
9L-T8		1/4			"C"	.242	.241/.246	Interference		LC-C8 (NAS1080-8)
10L-T6		3/16			#14	.182	.179/.186	Interference		LC-C6 (NAS1080-6)
10L-T8		1/4			"C"	.242	.238/.246	Interference		LC-C8 (NAS1080-8)
SAL-T6	NAS1446	3/16	#18	.1695	#13	.185	.185/.188	Interference	HG76-1	6LC-C6 (NAS1080C6)
SAL-T6	NAS1446	3/16	#18	.1695	4.75mm	.185	.187/.189	Partial Interference	HG76-1	6LC-2R6
SAL-T6		3/16			#11	.191	.190/.200	Clearance		(NAS1080E6)
SAL-T8	NAS1448	1/4	#1	.228	"D"	.246	.246/.248	Interference	HG76-2	6LC-C8 (NAS1080C8)
SAL-T8		1/4	#1	.228	6.3mm	.248	.248/.250	Partial Interference		6LC-2RL
SAL-T8		1/4			1/4	.250	.250/.260	Clearance		(NAS1080E8)
SAL-T10	NAS1450	5/16	"L"	.290	7.8mm	.3071	.307/.310	Interference	HG76-3	6LC-C10 (NAS1080C10)
SAL-T10		5/16	"L"	.290	7.9mm	.311	.310/.312	Partial Interference		6LC-2R10
SAL-T10		5/16			5/16	.3125	.3125/.322	Clearance		(NAS1080E10)
SAL-T12	NAS1452	3/8	11/32	.3438	9.4mm	.3701	.369/.372	Interference	HG76-4	6LC-C12 (NAS1080C12)
SAL-T12		3/8	11/32	.3438	9.5mm	.374	.372/.374	Partial Interference		6LC-2R12
SAL-T12		3/8			3/8	.375	.375/.385	Clearance		6LC-C12 (NAS1080E12)

*The referenced Huck Inspection Gauges are illustrated in table XXI, XXII, and XXIII.

Table XXI

Inspection gages.

NOTE:
NUMBER 1 POSITION: MAX. GRIP, TOUCH-GO
NUMBER 2 POSITION: NOM. GRIP, TOUCH-NO GO

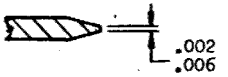

ENLARGED VIEW
OF POINTS

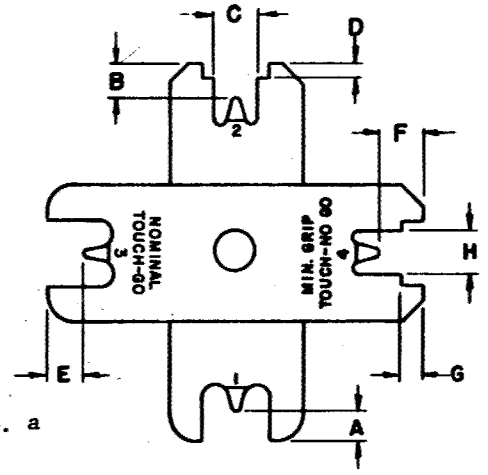

FIG. a

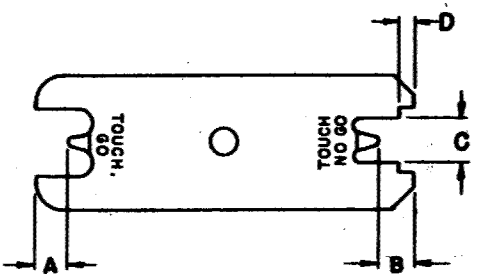

FIG. b

NOTE: TOLERANCES IN HEADINGS APPLY UNLESS OTHERWISE SPECIFIED.

GAGE NUMBER		NOM SIZE	FIG.	A +.001 -.000	B +.000 -.001	C ±.001	D ±.001	E	F	G	H
HG34D-1		3/16	b	.238	.322	.2972	.0665				
HG34D-2		3/16	b	.218	.288	.2972	.0725				
HG34D-3		1/4	b	.307	.399	.3942	.0725				
HG34D-4		1/4	b	.301	.371	.3942	.0785				
HG34D-5		5/16	b	.399	.479	.4992	.0635				
HG34D-6		5/16	b	.384	.449	.4862	.1055				
HG34D-7		3/8	b	.496	.582	.5892	.1185				
HG34D-8		3/8	b	.480	.545	.5892	.1555				
HG75-1		3/16	b	.194	.266	.2785	.114				
HG75-2		1/4	b	.246	.318	.3694	.139				
HG75-3		5/16	b	.265	.337	.471	.129				
HG75-4		3/8	b	.308	.380	.5647	.159				
HG75-5		5/32	b	.169	.241	.2400 .2405	.080 .081				
HG75-6		1/8	a	.136	.1655 .1660	.1900 .1905	.071 .072	.1650 .1655	.208 .209	.091 .092	.1900 .1905

Table XXII

Inspection gages.

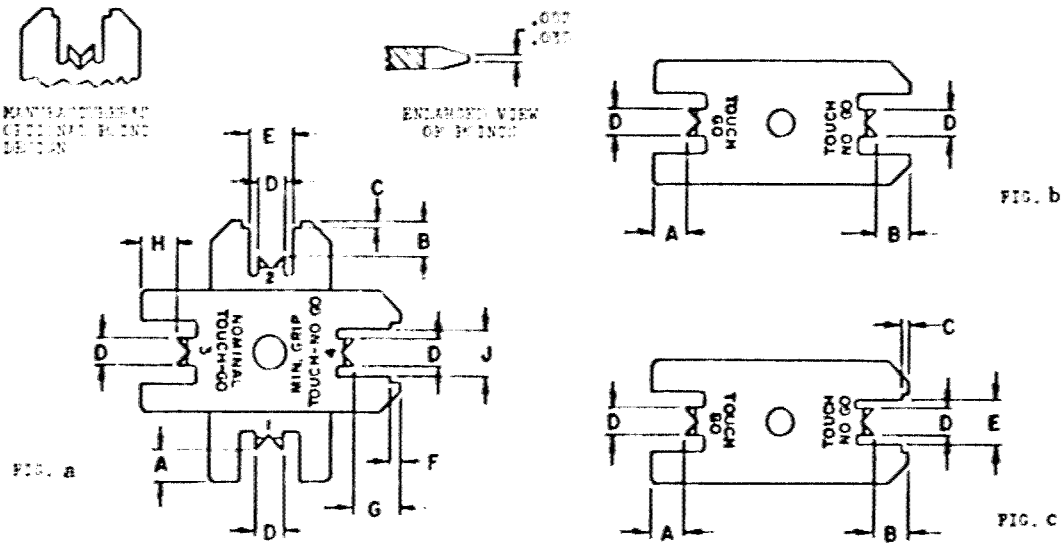

NOTE: NUMBER 1 POSITION: MAX. GRIP, TOUCH-GO
NUMBER 2 POSITION: NOM. GRIP, TOUCH-NO GO

NOTE: TOLERANCES IN HEADING OF ABOVE UNLESS OTHERWISE SPECIFIED.

GAGE NUMBER		NOM SIZE	FIG.	A +.001 -.000	B +.000 -.001	C ±.001	D ±.001	E ±.001	F ±.001	G +.000 -.001	H +.001 -.000	J ±.001
HGTC-1		3/16	b	.191	.204		.104					
HGTC-2		1/4	b	.247	.310		.224					
HGTC-3		5/16	b	.309	.341		.209					
HGTC-4		3/8	b	.319	.397		.339					
HGTT		3/16	a	.191	.237	.0625	.104	.2972	.0625	.204	.225	.2972
HGRF-2		1/4	c	.295	.374	.037	.224	.450				
HGRF-3		5/16	c	.339	.459	.087	.209	.480				
HGRF-4		3/8	c	.431	.549	.061	.339	.602				
HGRF-5		5/16	c	.309	.421	.135	.209	.480				
HGRF-6		3/8	c	.409	.520	.123	.339	.589				
HGRF-7		5/32	c	.169	.230	.009	.130	.253				
HGRF-8		5/16	c	.474	.492	.100 .110	.209	.4720 .4725				
HGRF-9		3/8	c	.507	.604	.119 .120	.339	.5750 .5755				
HGRF-10		3/16	a	.209	.2255 .2265	.038	.104	.303	.059	.280	.2250 .2255	.303
HGRF-12		5/32	c	.163	.234	.030 .033	.130	.2530 .2535				

Table XXIII

Inspection gages.

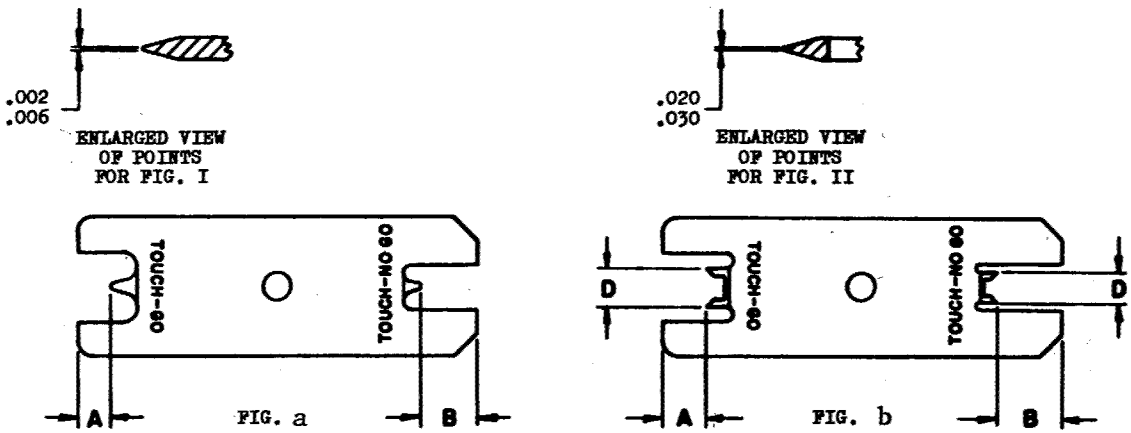

GAGE NUMBER		NOM. SIZE	FIG.	A +.001 -.000	B +.000 -.001	D ±.001
HG90-4		1/8	a	.150	.256	
HG90-5		5/32	a	.175	.290	
HG90-6		3/16	b	.186	.279	.164
HG90-8		1/4	b	.226	.318	.224
HG90-10		5/16	b	.265	.366	.268
HG90-12		3/8	b	.298	.403	.339

Custodian:

NASA - George C. Marshall Space Flight Center

Preparing activity:

George C. Marshall Space Flight Center

NASA—MSFC—C

MSFC DOCUMENTATION REPOSITORY - DOCUMENT INPUT RECORD

I. GENERAL INFORMATION

1. APPROVED PROJECT:	2. DOCUMENT/ DRAWING NUMBER:	3. CONTROL NUMBER:	4. RELEASE DATE:	5. SUBMITTAL DATE:
	MSFC-STD-156		11/15/1963	

6. DOCUMENT/DRAWING TITLE:	7. REPORT TYPE:
Riveting, Fabrication, and Inspection, Standard for	

8. CONTRACT NUMBER / PERFORMING ACTIVITY:	9. DRD NUMBER:	10. DPD / DRL / IDRD NUMBER:

11. DISPOSITION AUTHORITY (Check One):	12. SUBMITTAL AUTHORITY:	13. RELEASING AUTHORITY:
☒ Official Record - NRRS 8/12/A MJ ☒ Reference Copy - NRRS 8/5/A/3 (destroy when no longer needed)		M Beth Cook

14. SPECIAL INSTRUCTIONS:

15. CONTRACTOR/SUBMITTING ORGANIZATION, ADDRESS AND PHONE NUMBER:	16. ORIGINATING NASA CENTER:
	17. OFFICE OF PRIMARY RESPONSIBILITY:

18. PROGRAMMATIC CODE (5 DIGITS):	19. NUMBER OF PAGES:

II. ENGINEERING DRAWINGS

20. REVISION:	21. ENGINEERING ORDER:	22. PARTS LIST:	23. CCBD:

III. REPORTS, SPECIFICATIONS, ETC.

24. REVISION:	25. CHANGE:	26. VOLUME:	27. BOOK:	28. PART:	29. SECTION:

30. ISSUE:	31. ANNEX:	32. SCN:	33. DCN:	34. AMENDMENT:

35. APPENDIX:	36. ADDENDUM:	37. CCBD:	38. CODE ID:	39. IRN:

IV. EXPORT AND DISTRIBUTION RESTRICTIONS

- ☐ Privacy Act (see MWI 1382.1)
- ☐ Proprietary (see MPD 2210.1)
- ☐ Patent (see MPG 2220.1)
- ☐ ITAR (see MPG 2220.1)
- ☐ EAR (see MPG 2220.1)
- ☐ Other ACI (see NPG 1620.1 and MPG 1600.1) _____
- ☒ No statutory or institutional restrictions applicable -- material may be electronically distributed to user in the NASA domain

V. ORIGINATING ORGANIZATION APPROVAL

40. ORG. CODE:	41. PHONE NUMBER:	42. NAME:	43. SIGNATURE/DATE:
ED33	4-2592	Wayne Gamwell	Wayne P. Gamwell 10/15/03

VI. TO BE COMPLETED BY MSFC DOCUMENTATION REPOSITORY

44. RECEIVED BY:	45. DATE RECEIVED:	46. WORK ORDER:
Tammy Wise	10-22-03	