METRIC/INCH-POUND

KSC-E-165E
FEBRUARY 2, 2009

Supersedes
KSC-E-165D
February 22, 1995

ELECTRICAL
GROUND SUPPORT EQUIPMENT FABRICATION, SPECIFICATION FOR

EAR 99 – NO LICENSE REQUIRED

The information contained in the document is technical in content, but not technical data as defined by the ITAR or the EAR and therefore is **EAR 99 NLR; no export license required.** (General Prohibition Six (Embargo) applies to all items subject to the EAR, i.e. items on the CCL and within EAR 99 – NLR. **You may not make an export or re-export contrary to the provisions of part 746 (Embargos and Other Special Controls) of the EAR and 22 CFR part 126.1 of the ITAR.) EDDS #8572**

ENGINEERING DIRECTORATE

National Aeronautics and
Space Administration

John F. Kennedy Space Center

KSC FORM 16-12 (REV. 6/95) PREVIOUS EDITIONS ARE OBSOLETE (CG 11/95)

METRIC/INCH-POUND

KSC-E-165E
FEBRUARY 2, 2009

Supersedes
KSC-E-165D
February 22, 1995

ELECTRICAL GROUND SUPPORT EQUIPMENT FABRICATION, SPECIFICATION FOR

Approved by:

Patrick A. Simpkins, D.B.A.
Director, Engineering Directorate

JOHN F. KENNEDY SPACE CENTER, NASA

CONTENTS

1. SCOPE 1

2. APPLICABLE DOCUMENTS 1
2.1 Governmental 1
2.1.1 Specifications 1
2.1.2 Standards 3
2.1.3 Drawings 6
2.1.4 Publications 7
2.2 Non-Governmental 7
2.3 Order of Precedence 11

3. REQUIREMENTS 12
3.1 Metal and Sheet Metal Assemblies, Subassemblies, and Details 12
3.1.1 Surface Preparation 13
3.1.1.1 Abrasive Blasting 13
3.1.1.2 Degreasing 14
3.1.2 Protective Coatings, Thinners, and Cleaners 14
3.1.2.1 Generic Protective Coatings 15
3.1.2.2 Application of Coatings 15
3.1.2.3 Colors 16
3.1.2.4 Storage, Mixing, and Application Methods 16
3.1.2.5 Coating Finish 17
3.1.2.6 Touchup of Welds and Damaged Coatings 17
3.1.3 Sealants and Caulking 17
3.1.4 Chip-Free Clean-Room Paint 18
3.1.5 Zones of Exposure 18
3.1.6 Aluminum Racks, Enclosures, Panels, Junction Boxes, and Miscellaneous Details 18
3.1.6.1 Materials 18
3.1.6.2 Cleaning, Treating, and Coating 18
3.1.6.2.1 Surface Preparation 18
3.1.6.3 Chromate Coatings 19
3.1.6.4 Protective Coatings 19
3.1.6.5 Finish Colors 19
3.1.7 Steel Racks, Enclosures, Junction Boxes, Assemblies, and Miscellaneous Details 20
3.1.7.1 Materials 20
3.1.7.2 Cleaning, Treating, and Coating 20
3.1.7.3 Finish Colors 20

3.1.8 Fabricated Chassis 20
3.1.8.1 Materials 20
3.1.8.2 Cleaning and Treating....20
3.2 Welding and Brazing 20
3.2.1 Welding....20
3.2.2 Brazing....21
3.3 Fasteners 21
3.3.1 Threaded Fasteners 21
3.3.1.1 Torque Limits for Threaded Fasteners....21
3.3.1.2 Installation of Nuts on Bolts or Screws 21
3.3.1.3 Torque Values for Standard and High-Strength Steel Fasteners 27
3.3.1.3.1 Plated....27
3.3.1.3.2 Lubricated 27
3.3.1.4 Torque Values for 300 Series CRES Fasteners 27
3.3.1.4.1 Passivated....27
3.3.1.4.2 Plated....27
3.3.1.4.3 Lubricated 27
3.3.1.5 Torque Values for 430 MPa (62 ksi) Tensile Strength Aluminum Alloy Fasteners (2024-T4, 7075-T6) 27
3.3.1.5.1 Anodized....27
3.3.1.5.2 Lubricated 27
3.3.1.6 Lubricants 28
3.3.1.7 Self-Locking Fasteners 28
3.3.1.8 Cotter Pin, Lockwire, and Safety Cable Securing 29
3.3.1.8.1 Safety Cable....29
3.3.1.9 Nonmetallic Fasteners....29
3.3.2 Adhesives....29
3.3.3 Rivets 29
3.3.3.1 Chips, Burrs, and Foreign Material....29
3.3.3.2 Rivet Substitutions....32
3.4 Identification and Marking (of GSE)....32
3.5 Electrical Wiring, Internal 32
3.5.1 Plenum-rated and Non-plenum-rated....32
3.5.2 Class I, Division 2....32
3.5.3 Wire....33
3.5.4 Routing....34
3.5.5 Grouping 34
3.5.6 Breakouts 34
3.5.7 Wire Stripping....34
3.5.8 Terminals 36
3.5.8.1 Modular Terminal Junction Systems 36
3.5.8.2 Screw Terminals 36
3.5.8.3 Compression Terminals 36
3.5.8.4 Solder Terminals....37

3.5.8.4.1 Terminal Swaging 37
3.5.8.4.2 Rework 41
3.5.8.5 Solderless Wrap Terminals 42
3.5.9 Lacing and Tying 42
3.5.9.1 Lacing 42
3.5.9.2 Cable Ties and Clamps 43
3.5.10 Termination Order 44
3.5.11 Molding and Potting Electrical Connectors 44
3.5.12 Splicing 44
3.5.13 Terminating and Grounding Shields 44
3.5.13.1 Insulated Shields Over Individual Conductors or Groups of Conductors 48
3.5.13.2 Uninsulated Shields Over Individual Conductors or Groups of Conductors 49
3.5.13.3 Overall Shields Surrounding the Entire Cable Core 50
3.5.13.3.1 Tinel-Lock Rings 51
3.5.13.3.2 EMI/RFI Foil Tape and Wire Mesh 52
3.5.13.3.3 Interior Cable Runs 53
3.5.13.3.4 Exterior Cable Runs 53
3.5.13.4 Shield Terminals 54
3.6 Terminations 54
3.6.1 Compression Type 54
3.6.1.1 Captive Nut or Screw Head 54
3.6.1.2 Clamp or Screw End 58
3.6.2 Crimp Type 58
3.6.3 Friction Type 58
3.6.4 Solder Type 58
3.6.4.1 Hand and Machine Soldering 58
3.6.4.2 Soldering Multiple Conductors in a Single Solder Cup 59
3.6.5 Bonding and Grounding Type 59
3.6.6 DIN Rail-Mounted Terminal Blocks 59
3.7 Printed Wiring Boards 59
3.7.1 Material 59
3.7.2 Construction 59
3.7.2.1 Circuit Pads 59
3.7.2.2 Heat Sinks 60
3.7.2.2.1 Electrical Insulation 60
3.7.2.2.2 Thermal Resistance 60
3.7.2.3 Eyelets and Tubelets 60
3.7.2.4 Workmanship 60
3.7.3 Cleaning 61
3.7.4 Rejection Criteria 61
3.7.5 Inspection 62
3.7.6 Conformal Coating 62

3.7.7 Repair 62
3.7.7.1 Printed Wiring Boards Using Surface-Mount Technology (SMT) 62
3.8 Sealing and Insulating 62
3.8.1 Insulation 62
3.8.1.1 Heat-Reactive Tubing 63
3.8.1.1.1 Application 63
3.8.1.1.2 Visual Inspection 64
3.8.1.2 Insulation Tubing 64
3.8.2 Sealing Compound, Electrical 64
3.9 Hazardproofing 65
3.9.1 Intrinsically Safe Equipment 65
3.9.2 Ignitionproofing 65
3.9.2.1 Small Junction Boxes 65
3.9.2.2 Electrical Components 65
3.9.2.3 Electrical Connectors and Mated Cables 66
3.9.3 Purging and Pressurization 66
3.9.3.1 Equipment 66
3.9.3.2 Purge Pressure 67
3.9.3.3 Flow Rate 67
3.9.3.4 Purge Media 67
3.10 Corrosion Control 67
3.10.1 Corrosion-Resistant Materials 68
3.10.2 Dissimilar Metals 69
3.10.3 Moisture Exclusion 69
3.10.4 Protective Coatings 69
3.10.5 Lubricants 70
3.11 General-Purpose Cables 70
3.11.1 Standard Bulk Cable 70
3.11.2 Unique Bulk Cable 70
3.11.2.1 Preferred Types 70
3.11.2.2 Fabrication Procedure 70
3.11.3 Connectors 72
3.11.3.1 D-Subminiature (DB) Connectors 73
3.11.4 Jacket Removal 74
3.11.5 Conductor and Shield Termination 74
3.11.6 Potting and Molding 75
3.11.7 Cable Jacket Repair 75
3.11.7.1 Sleeves 75
3.11.7.2 Approved Products 75
3.11.8 Splicing 76
3.11.8.1 Procedure 76
3.11.8.2 Approved Products 77
3.11.9 Thermal Protection 78
3.11.9.1 Application 78

3.11.9.2 Approved Products....78
3.11.10 Cable Checkout....79
3.11.10.1 Cable Continuity Test....79
3.11.10.2 Cable Insulation-Resistance Tests....79
3.11.10.3 Radio Frequency Cable Tests....80
3.11.10.3.1 Continuity Tests....80
3.11.10.3.2 Insulation-Resistance Test....80
3.11.10.3.3 Time Domain Reflectometer (TDR) Test....81
3.11.11 AC Power Cables....85
3.12 Mineral-Insulated (MI) Cable....85
3.13 Transducers....85
3.14 Electromagnetic Interference Tests....85
3.15 Fabrication Process Waste Disposal....86
3.16 Fiber-Optic Cables....86
3.16.1 Optical-Fiber End Preparation....87
3.16.2 Cleaning....87
3.16.3 Splicing....88
3.16.3.1 Presplicing Examination....88
3.16.3.2 Splicing Method....88
3.16.3.2.1 Fusion Splicing....89
3.16.3.2.2 Mechanical Splicing....89
3.16.3.2.3 Chemical Splicing....89
3.16.3.3 Splice Requirements....89
3.16.3.3.1 Location....89
3.16.3.3.2 Protection....89
3.16.3.3.3 Strength Member....89
3.16.4 Fiber-Optic Cable Assemblies....89
3.16.4.1 Cable Assembly....89
3.16.4.1.1 Preassembly Verification....90
3.16.4.1.2 Preassembly Examination....90
3.16.4.2 Completed Cable Assemblies....90
3.16.5 Fiber-Optic Assemblies....91
3.16.5.1 Fiber-Optic Connector Termination....91
3.16.5.1.1 Preassembly Verification....91
3.16.5.1.2 Preassembly Examination....91
3.16.5.2 Post–Fiber-Optic-Connector-Termination Inspection....91
3.16.5.3 Fiber-Optic Routing....92
3.16.6 Testing....92
3.16.6.1 Fiber-Optic Splices....92
3.16.6.2 Fiber-Optic Cable Assemblies....92
3.16.6.3 Fiber-Optic Assemblies....93
3.16.6.4 Optical Time-Domain Reflectometer (OTDR) Test....93
3.16.6.5 OTDR Basic Theory of Operation....93
3.16.6.5.1 Attenuation....96

3.16.6.5.2 Point Defects 98
3.16.7 Fiber-Optic Cable Assembly Installation 100
3.16.7.1 Tensile Load and Vertical Rise 100
3.16.7.2 Installation Bend Radius 101
3.16.7.3 Installed Bend Radius 101
3.16.7.4 Cable Tying 101
3.16.7.5 Dust Caps 101
3.16.7.6 Premating Inspection 101
3.16.7.7 Connector Torque 101
3.16.7.8 Sharp Edges 101
3.17 Ethernet 102
3.17.1 Ethernet Naming Conventions 102

4. QUALITY ASSURANCE PROVISIONS 102
4.1 Responsibility for Inspection and Test 102
4.2 Certification of Personnel 102
4.3 Certification of Tooling and Test Equipment 103
4.3.1 Soldering Tools 103
4.3.2 Crimping Tools 103
4.3.3 Crimping Tools, Special 104
4.3.4 Torque Wrenches 104
4.3.5 Wire Stripping Tools 104
4.3.6 Solderless Wrap Tools 104
4.3.7 Test Equipment 104
4.4 Equipment Checkout 105
4.4.1 Sequence of Tests 105
4.4.2 Continuity Tests 106
4.4.3 Isolation Checks 106
4.4.4 Functional Checks 107
4.5 Completion of Tests 107
4.6 Manufacturing Instructions/Documentation 107
4.7 Commercial Off-the-Shelf (COTS) Concept 107
4.7.1 Modified Off-the-Shelf (MOTS) Items 108

5. PREPARATION FOR DELIVERY 108

6. NOTES 109
6.1 Intended Use 109
6.2 Definitions 109

FIGURES

Figure 1. Safety Cable, Tension Tool, Ferrule, and Calibration Unit 30
Figure 2. Typical Safety Cable Installations 31
Figure 3. Harness or Wire Bundle 35
Figure 4. Rolled Swage Terminals 38
Figure 5. Elliptical Funnel Swage Terminals 39
Figure 6. Funnel Swage Terminals 40
Figure 7. Cable Termination Hardware 45
Figure 8. Typical Termination Configuration for Overall Shielded Cable With Insulated Conductor Shields 46
Figure 9. Graphic Representation of Individual Shields From Source, Through Intermediate Break Points, to End Instrument 47
Figure 10. Typical Termination Configuration for Overall Shielded Cable With Uninsulated Conductor Shields 48
Figure 11. 360-Degree Overall Shield Termination Using a Mold Adapter 50
Figure 12. Tinel-Lock Rings and an Example of One Type of Adapter 51
Figure 13. Tinel-Lock Ring Resistance Heating Tools 52
Figure 14. Typical Installation of Tinel-Lock Ring 52
Figure 15. Bridge Bus Terminals 55
Figure 16. Captive and Noncaptive Nut and Screw Head Terminations 56
Figure 17. Clamp and Screw End Terminations 57
Figure 18. Application of Heat-Reactive Tubing 64
Figure 19. Unique Bulk Cable Fabrication 71
Figure 20. DB9 and DB25 Connectors 73
Figure 21. DB15 Connectors 73
Figure 22. MD50 and MD68 Connectors 74
Figure 23. TDR Traces for Coaxial Cable 82
Figure 24. TDR Fault Traces for Twinaxial Cable (Sheet 1 of 2) 83
Figure 25. Typical OTDR Block Diagram 95
Figure 26. OTDR Trace of an Installed Cable Plant 96
Figure 27. OTDR Measurement Points for Measuring Fiber Attenuation, Using Dead-Zone Fiber 97
Figure 28. OTDR Trace Showing a Nonreflective Fault With Apparent Gain and a Reflective Fault With No Apparent Loss or Gain 98
Figure 29. Extrapolation for a Point Defect Showing an Apparent Signal Gain 99
Figure 30. Exaggerated Loss Obtained at Point Defects Exhibiting Gain in One Direction by Conducting the OTDR Measurement in the Opposite Direction 100

TABLES

Table 1. Torque Values for Steel, Cadmium-Plated, Unlubricated Threaded Fasteners 23
Table 2. Torque Values for Steel, Lubricated (Plated, Unplated) Threaded Fasteners 24
Table 3. Torque Values for Corrosion-Resistant Steel (CRES) and Aluminum Alloy Threaded Fasteners 25
Table 4. Required Locking Torque at Room Ambient Temperature 26
Table 5. Minimum Bolt or Screw Thread Protrusion 26
Table 6. Insulation Clearances for Wire 36
Table 7. Spacing of Lacing From Terminations 42
Table 8. Spacing of Lacing in the Harness 42
Table 9. Potential Tendency for Galvanic Corrosion 68

ABBREVIATIONS, ACRONYMS, AND SYMBOLS

°C	degree Celsius
°F	degree Fahrenheit
µm	micrometer (1×10^{-6} m)
AC	alternating current
AHJ	authority having jurisdiction
AIA	Aerospace Industries Association
ANSI	American National Standards Institute
ASCII	American Standard Code for Information Interchange
ASME	American Society of Mechanical Engineers
ASTM	ASTM International
AWG	American Wire Gage
BHP	Bulkhead Plate
CH_6H_2	methyl hydrazine
COTS	commercial off-the-shelf
CRES	corrosion-resistant steel
CSA	Canadian Standards Association
CSMA/CD	Carrier Sense Multiple Access Collision Detection
DAS	Data Acquisition System
dB	decibel
DB	D-subminiature
DC	direct current
ECA	Electronic Components Association
EIA	Electronic Industries Alliance
EMI	electromagnetic interference
FAC	Florida Administrative Code
FDEP	Florida Department of Environmental Protection
FED	Federal
FOTP	fiber-optic test procedures
ft^3/min	cubic foot per minute

GP	general publication
GPa	gigapascal (1×10^9 Pa)
GPS	Global Positioning System
GSE	ground support equipment
HD	high density
HGDS	Hazardous Gas Detection System
IEC	International Electrotechnical Commision
IEEE	Institute of Electrical and Electronics Engineers, Inc.
in	inch
in-lb	inch-pound
IR	infrared
ISO	International Organization for Standardization
JSC	Lyndon B. Johnson Space Center
km	kilometer (1×10^3 m)
km/h	kilometer per hour
KNPR	Kennedy NASA Procedural Requirements
KSC	John F. Kennedy Space Center
ksi	kip (1,000 pounds) per square inch
L	liter
L/s	liter per second
LO_2	liquid oxygen
m	meter
m/s	meter per second
Mbps	megabit (1,000 bits) per second
MD	micro DB
MEK	methyl ethyl ketone
MHz	megahertz (1×10^6 Hz)
MI	mineral-insulated
MIL	military
mm	millimeter (1×10^{-3} m)
MMH	monomethylhydrazine

MPa	megapascal (1×10^6 Pa)
mph	mile per hour
MS	military standard
MSFC	George C. Marshall Space Flight Center
MΩ	megohm (1×10^6 Ω)
N·m	newton meter
N_2O_2	nitrogen dioxide
N_2O_4	nitrogen tetroxide
NAS	National Aerospace Standards
NASA	National Aeronautics and Space Administration
NATO	North Atlantic Treaty Organization
NEC	National Electrical Code
NEMA	National Electrical Manufacturers Association
NFPA	National Fire Protection Association
NIOSH	National Institute of Occupational Safety and Health
nm	nanometer (1×10^{-9} m)
no.	number
NPR	NASA Procedural Requirements
OSHA	Occupational Safety and Health Administration
OTDR	optical time domain reflectometry/reflectometer
Pa	pascal
PC	personal computer
PCB	printed circuit board
PDS	Premise Distribution System
PTFE	polytetrafluoroethylene
PVC	polyvinyl chloride
ref	reference
RF	radio frequency
RFI	radio frequency interference
RH	relative humidity
RIO	remote input/output

RS	Recommended Standard
RTV	room-temperature vulcanizing
s	second
SAE	Society of Automotive Engineers
SCSI	Small Computer System Interface
SOW	statement of work
SPEC	specification
SSPF	Space Station Processing Facility
STD	standard
TCLP	Toxicity Characteristic Leaching Procedure
TD	Terminal Distributor
TDR	time domain reflectometer
TIA	Telecommunications Industry Association
TJS	terminal junction system
TM	technical manual
typ	typical
UL	Underwriters Laboratories, Inc.
UTS	ultimate tensile strength
UV	ultraviolet
V	volt
VDC	volt direct current
WAD	Work Authorization Document
Ω	ohm

ELECTRICAL GROUND SUPPORT EQUIPMENT FABRICATION, SPECIFICATION FOR

1. SCOPE

This document specifies parts, materials, and processes used in the fabrication, maintenance, repair, and procurement of electrical and electronic control and monitoring equipment associated with ground support equipment (GSE) at the John F. Kennedy Space Center (KSC).

2. APPLICABLE DOCUMENTS

The following documents form a part of this document to the extent specified herein. When this document is used for procurement, including solicitations, or is added to an existing contract, the specific revision levels, amendments, and approval dates of said documents shall be specified in an attachment to the solicitation/statement of work/contract.

2.1 Governmental

2.1.1 Specifications

National Aeronautics and Space Administration (NASA)

NASA-SPEC-5004	Aerospace Ground Support Equipment and Related Nonconventional Facilities

John F. Kennedy Space Center (KSC), NASA

KSC-SPEC-E-0002	Modular Enclosures (Cabinets, Consoles) and Accessories, Radio Frequency Interference Shielded, Specification for
KSC-SPEC-E-0017	Electrical Power Cables, Installation of Specification for
KSC-SPEC-E-0024	Cable, Electrical, Shielded, Jacketed for Harness Assemblies, General Specification for
KSC-SPEC-E-0031	Electrical Cables, General Specification for
KSC-SPEC-Z-0005	Brazing, Steel, Copper, Aluminum, Nickel, and Magnesium Alloys, Specification for

Lyndon B. Johnson Space Center (JSC), NASA

SE-S-0073	Specification, Space Shuttle Fluid Procurement and Use Control

Federal

A-A-59125	Terminal Boards, Molded, Barrier Screw and Stud Types, and Associated Accessories
A-A-59126	Terminals, Feedthru (Insulated) and Terminals, Stud (Insulated and Noninsulated)
A-A-59298	Tape, Pressure-Sensitive Adhesive
A-A-59551	Wire, Electrical, Copper (Uninsulated)
A-A-59569	Braid, Wire (Copper, Tin-Coated, Silver-Coated, or Nickel-Coated, Tubular or Flat)

Military

MIL-A-22262	Abrasive Blasting Media: Ship Hull Blast Cleaning
MIL-DTL-16878	Wire, Electrical, Insulated, General Specification for
MIL-DTL-17	Cables, Radio Frequency, Flexible and Semirigid, General Specification for
MIL-DTL-22520	Crimping Tools, Terminal, Hand or Power Actuated, Wire Termination, and Tool Kits, General Specification for
MIL-DTL-22992	Connectors, Plugs and Receptacles, Electrical, Waterproof, Quick Disconnect, Heavy Duty Type, General Specification for
MIL-DTL-26482	Connectors, Electrical (Circular, Miniature, Quick Disconnect, Environment Resisting), Receptacles and Plugs, General Specification for
MIL-DTL-34308	Connectors, Electric, Rectangular, Miniature, Polarized Shell, Rack and Panel, General Specification for

MIL-DTL-38999	Connector, Electrical Circular, Miniature, High Density Quick Disconnect (Bayonet, Threaded and Breech Coupling), Environment Resistant, Removable Crimp and Hermitic Solder Contacts, General Specification for
MIL-DTL-5015	Connectors, Electrical, Circular Threaded, AN Type, General Specification for
MIL-DTL-55302	Connectors, Printed Circuit Subassembly and Accessories
MIL-DTL-5541	Chemical Conversion Coatings on Aluminum and Aluminum Alloys
MIL-DTL-83513	Connectors, Electric, Rectangular, Miniature, Polarized Shell, Rack and Panel, General Specification for
MIL-P-85891	Plastic Media for Removal of Organic Coatings
MIL-PRF-46010	Lubricant, Solid Film, Heat Cured, Corrosion Inhibiting
MIL-S-81824	Splices, Electric, Permanent, Crimp Style, Copper, Insulated, Environment Resistant
MIL-T-713	Twine, Fibrous: Impregnated, Lacing and Tying
MIL-W-81822	Wire, Electrical, Solderless Wrap, Insulated and Uninsulated, General Specification for
QPL-46058-87 Notice 1	Insulating Compound, Electrical (for Coating Printed Circuit Assemblies)

2.1.2 Standards

National Aeronautics and Space Administration (NASA)

NASA-STD-5005	Standard for the Design and Fabrication of Ground Support Equipment
NASA-STD-5008	Protective Coating of Carbon Steel, Stainless Steel, and Aluminum on Launch Structures, Facilities, and Ground Support Equipment, Standard for

NASA-STD-6001	Flammability, Odor, Offgassing, and Compatibility Requirements and Test Procedures for Materials in Environments That Support Combustion
NASA-STD-8739.1	Workmanship Standard for Staking and Conformal Coating of Printed Wiring Boards and Electronic Assemblies
NASA-STD-8739.2	Workmanship Standard for Surface Mount Technology
NASA-STD-8739.3	Soldered Electrical Connections
NASA-STD-8739.4	Crimping, Interconnecting Cables, Harnesses, and Wiring
NASA-STD-8739.5	Fiber Optic Terminations, Cable Assemblies, and Installation

John F. Kennedy Space Center (KSC), NASA

KSC-STD-132	Potting and Molding Electrical Cable Assembly Terminations, Standard for
KSC-STD-E-0002	Hazard Proofing of Electrically Energized Equipment, Standard for
KSC-STD-E-0010	Soldering of Electrical Connections (Hand or Machine), Standard for
KSC-STD-E-0012	Facility Grounding and Lightning Protection, Standard for
KSC-STD-E-0015	Marking of Ground Support Equipment, Standard for
KSC-STD-E-0021	KSC Telecommunication Premises Distribution Systems, Design of, Standard for

George C. Marshall Space Flight Center (MSFC), NASA

MSFC-STD-156	Riveting, Fabrications and Inspection, Standard for
MSFC-STD-486	Threaded Fasteners, Torque Limits for, Standard

Federal

CFR Title 29, Part 1910	Occupational Safety and Health Standards
CFR Title 40, Parts 260–282	Protection of Environment
CFR Title 49	Transportation
FED-STD-595	Colors Used in Government Procurement

State

FAC FDEP Division 62	Florida Administrative Code (FAC), Florida Department of Environmental Protection (FDEP), Divison 62

Military

MIL-STD-129	Military Marking for Shipment and Storage
MIL-STD-202	Test Method Standard: Electronic and Electrical Component Parts
MIL-STD-2073-1	Standard Practice for Military Packaging
MIL-STD-461	Control of Electromagnetic Interference Characteristics of Subsystems and Equipment, Requirements for the
MIL-STD-464	Electromagnetic Environmental Effects, Requirements for Systems
MIL-STD-889	Dissimilar Metals
MS21980	Ferrules, Outer, Uninsulated, Shield Terminating, Type I, Two-Piece, Class I, for Shielded Cable
MS21981	Ferrule, Inner, Uninsulated, Shield Terminating, Type I, Two-Piece, Class I, for Shielded Cable
MS27466J	Connectors, Receptacle, Electrical, Wall Mounting Flange, Crimp Type, Bayonet Coupling, Series I

2.1.3 Drawings

John F. Kennedy Space Center (KSC), NASA

75M02047	Plate, Calibrated Bleed
75M05218	Complex 39 Cast Chassis
75M13302	Connection Inspection Specifications
75M13676	Shield Rings
79K04613	Electrical Cable Shield Termination
79K06110	MI Cable Termination
79K07416	Cable and Harness Assembly, Fabrication Details
79K07491	Installation, Purge Hardware
79K13308	Printed Wiring Board Assembly, Electronic Control Module
79K14177	Instructions for Potting and Molding Connector Assemblies
79K19600	Electrical Cable Fabrication Requirements
79K22638	Solderless Electrical Connections (Supersedes 75M05668)
82K03874	Miscellaneous Cable Fabrication Details, Specification for
82K03878	Intrabuilding Control, Signal, and Communication Cable Specification for SSPF and Related Buildings for Kennedy Space Center
82K04459	Electrical Connectors Termination Details
120E3100001	Heavy Duty GSE Cable Specification
120E3100002	Light Duty GSE Cable Specification
120E3100003	GSE Cable Fabrication Specification

2.1.4 Publications

National Aeronautics and Space Administration (NASA)

NPR 8715.3C	NASA General Safety Program Requirements
TM-584	Corrosion Control and Treatment Manual

John F. Kennedy Space Center (KSC), NASA

GP-777	Handbook for Exterior Electrical Enclosures
GP-864, Volume 2A	KSC GSE Electrical Cables Handbook
KNPR 8500.1	KSC Environmental Requirements
KNPR 8715.3	KSC Safety Practices Procedural Requirements
KNPR 8730.1	KSC Metrology and Calibration Procedural Requirements
KSC-NE-9187	Sensors, Transducers and Signal Conditioning Systems Selection Process

(Copies of specifications, standards, drawings, and publications required by suppliers in connection with specified procurement functions should be obtained from the procuring activity or as directed by the contracting officer.)

2.2 Non-Governmental

Aerospace Industries Association (AIA)/National Aerospace Standards (NAS)

AIA/NAS NASM25027	Nut, Self-Locking, 250 Deg. F, 450 Deg. F, and 800 Deg. F
AIA/NAS NASM33540	Safety Wiring, Safety Cabling, Cotter Pinning, General Practices for
AIA/NAS NASM35333	Washer, Lock, Flat-Internal Tooth

American Society of Mechanical Engineers (ASME)

ASME B107.14	Hand Torque Tools (Mechanical)

ASTM International

ASTM C 920-05	Standard Specification for Elastomeric Joint Sealants
ASTM D 3951-98	Standard Practice for Commercial Packaging
ASTM D 4752-03	Standard Test Method for Measuring MEK Resistance of Ethyl Silicate (Inorganic) Zinc-Rich Primers by Solvent Rub

Electronic Components Association (ECA)/Electronic Industries Alliance (EIA)

ECA EIA-364-E	Electrical Connector/Socket Test Procedures Including Environmental Classifications
EIA/ECA 310	Cabinets, Racks, Panels, and Associated Equipment

International Electrotechnical Commission (IEC)

IEC 60715	Dimensions of low-voltage switchgear and controlgear – Standardized mounting on rails for mechanical support of electrical devices in switchgear and controlgear installations – First edition
IEC 60947-7-1	Low-voltage switchgear and control gear – Part 7-1: Ancillary equipment – Terminal blocks for copper conductors – Second edition

International Organization for Standardization (ISO)

ISO 10012	Measurement management systems – Requirements for measurement processes and measuring equipment

IPC – Association Connecting Electronics Industries

IPC 2221	Generic Standard on Printed Board Design
IPC 2222	Sectional Design Standard for Rigid Organic Printed Boards
IPC 6011	Generic Performance Specification for Printed Boards

IPC 6012	Qualification and Performance Specification for Rigid Printed Boards
IPC 7711/7721	Rework, Modification, and Repair of Electronic Assemblies
IPC-HDBK-001	Handbook and Guide to Supplement J-STD-001 (Requirements for Soldered Electrical and Electronic Assemblies)

National Aerospace Standards (NAS)

NAS 1744	Splice, Conductor, Solder Style, Hot Air or Infrared, Shrinkable, Insulated, Immersion Resistant

National Conference of Standards Laboratories (NCSL)

NCSL Z540.3	Requirements for the Calibration of Measuring and Test Equipment

National Electrical Manufacturers Association (NEMA)

NEMA VE 2	Cable Tray Installation Guidelines
NEMA WC 63.1	Performance Standard for Twisted Pair Premise Voice and Data Communications Cables
NEMA WC 66	Performance Standard for Category 6 and Category 7 100 Ohm Shielded and Unshielded Twisted Pair Cables

National Fire Protection Association (NFPA)

NFPA 496	Standard for Purged and Pressurized Enclosures for Electrical Equipment
NFPA 497	Recommended Practice for the Classification of Flammable Liquids, Gases, or Vapors and of Hazardous (Classified) Locations for Electrical Installations in Chemical Process Areas
NFPA 70	National Electrical Code

Society for Protective Coatings

SSPC-AB 1	Mineral and Slag Abrasives
SSPC-SP 1	Solvent Cleaning
SSPC-SP 3	Power Tool Cleaning
SSPC-SP 5/NACE No. 1	White Metal Blast Cleaning

Society of Automotive Engineers (SAE)

SAE AMS 2518	Thread Compound, Anti-Seize, Graphite-Petrolatum
SAE AMS 2695C	Connections, Electrical, Solderless Wire-Wrapped
SAE AMS-DTL-23053	Insulation Sleeving, Electrical, Heat Shrinkable, General Specification for
SAE AMS-DTL-23053/1	Insulation Sleeving, Electrical, Heat Shrinkable, Crosslinked Chlorinated Polyolefin, Flexible
SAE AMS-DTL-23053/15	Insulation Sleeving, Electrical, Heat Shrinkable, Polyolefin, Heavy-Wall, Coated, Flexible, Outer Wall Crosslinked
SAE AMS-DTL-23053/5	Insulation Sleeving, Electrical, Heat Shrinkable, Polyolefin, Flexible, Crosslinked
SAE AMS-I-23053/2	Insulation Sleeving, Electrical, Heat Shrinkable, Polyvinyl Chloride, Flexible, Crosslinked and Non-Crosslinked
SAE AMS-I-7444	Insulation Sleeving, Electrical, Flexible
SAE AMS-QQ-A-250/11	Aluminum Alloy 6061, Plate and Sheet
SAE AS 18121	Ferrules, Outer, Insulated, Shield Terminating, Type II, Two-Piece, Class I, for Shielded Cable
SAE AS 21608	Ferrule, Shield Terminating, Crimp Style
SAE AS 25036	(R) Terminal, Lug, Crimp Style, Copper, Insulated, Ring Tongue, Bell-Mouthed, Type II, Class 1 (for 105 °C Total Conductor Temperature)

SAE AS 27212	Terminal Board Assembly, Molded-In-Stud, Electric
SAE AS 50861	Wire, Electric, Polyvinyl Chloride Insulated Copper or Copper Alloy
SAE AS 7928	Terminals, Lug: Splices, Conductors: Crimp Style, Copper, General Specification for
SAE AS 81714	Terminal Junction Systems (TJS), Environment Resistant, General Specification for
SAE AS 83519	Shield Termination, Solder Type, Insulated, Heat Shrinkable, Environment Resistant, General Specification for
SAE AS 8660	Silicone Compound NATO Code Number S-736

Telecommunications Industry Association (TIA)

TIA/EIA-455-78	FOTP-78 Spectral-Attenuation Cutback Measurement for Single-Mode Optical Fibres
TIA-440-B	Fiber Optic Terminology
TIA-455-133-A	FOTP-133 IEC-60793-1-22 Optical Fibres – Part 1-22: Measurement Methods and Test Procedures – Length Measurement

Underwriters Laboratories Inc. (UL)/Canadian Standards Association (CSA)

UL 444/CSA C22.2	UL Standard for Safety Communications Cables

2.3 Order of Precedence

In the event of conflict between the documents referenced herein and the contents of this document, the contents of this document shall supersede except where otherwise noted. The applicable NASA contract or purchase/procurement order shall take precedence over the contents of this document in the event of conflicting requirements. Nothing in this document supersedes applicable laws and regulations unless a specific exemption has been obtained.

3. REQUIREMENTS

The requirements of this specification apply to the fabrication, maintenance, repair, and procurement of all electrical and electronic control and monitoring equipment associated with GSE at KSC. The contractor shall be responsible for adhering to the provisions of this specification. The contractor is also responsible for adhering to all local, state, and Federal safety regulations during performance of work specified in this document, including but not limited to, KNPR 8715.3, NPR 8715.3C, and CFR Title 29, Part 1910 (OSHA). The contracting officer shall be responsible for interpreting the provisions and verifying compliance with this specification. No substitutions of items shall be allowed unless approved by the contracting officer or the designated representative. If this specification is used for contracts for maintenance and repair, the responsibility for interpreting the provisions of and verifying compliance with this specification shall belong to the Government technical contact (NASA systems engineer, sustaining engineer, etc.).

3.1 Metal and Sheet Metal Assemblies, Subassemblies, and Details

Where required, all metal and sheet metal assemblies, subassemblies, and details shall be fabricated as specified by the applicable drawings and specifications in accordance with this specification, using methods that will ensure an end product of high-quality standards and appearance. Protective coatings for carbon steel, stainless steel, and aluminum shall be applied in accordance with the following paragraphs and NASA-STD-5008. Equipment racks shall be in accordance with KSC-SPEC-E-0002 and shall be designed to maintain the panel and chassis slide mounting dimensions specified in KSC-SPEC-E-0002 so standard panels and hardware may be used. The dimensions of standard 483-millimeter (mm) (19-inch [in]) panels shall be in accordance with EIA/ECA-310. Commercial off-the-shelf (COTS) racks and enclosures will comply with KSC-SPEC-E-0002.

3.1.1 Surface Preparation

All surfaces to be coated shall be clean, dry, and free from oil, grease, dirt, dust, corrosion, peeling paint, caulking, weld spatter, and any other surface contaminants. All surfaces that will become inaccessible after fabrication, erection, or installation shall be prepared and coated while accessible. Surface preparation and coating operations shall be sequenced so that freshly applied coatings will not be contaminated by dust or foreign matter. All equipment and adjacent surfaces that are not to be coated shall be protected from contamination during surface preparation. Surfaces shall be masked before painting to leave unpainted conductive contact areas where designated. Working mechanisms shall be protected against an intrusion of abrasive material. All surfaces shall be degreased, as required, before more surface preparation work is done or protective coatings are applied, or both. Additional metal-specific surface preparation shall be performed in accordance with NASA-STD-5008.

NOTES

1. Only aggregates that are free of crystalline silica shall be selected for use at NASA. Exemptions to this policy shall be coordinated with the local Occupational Health Office.

2. Blasting aggregate for abrasion-sensitive hardware (such as bellows, gimbal joints, and other thin-walled components) shall be materials that produce no additional surface profile. Blasting operations shall not produce holes, cause distortion, remove metal, or cause thinning of the substrate.

3.1.1.1 Abrasive Blasting

The abrasive blasting system shall comply with Occupational Safety and Health Administration (OSHA), American National Standards Institute (ANSI), and National Institute of Occupational Safety and Health (NIOSH) configurations. The blasting system shall be designed to produce the specified cleanliness level and profile when coupled with the available compressed air supply.

Blasting aggregates shall be clean and dry, and made of approved materials in accordance with MIL-A-22262 or SSPC-AB 1, Type I or II, Class A, or steel grit. Only materials approved in the QPL attached to MIL-A-22262 shall be used. The abrasive grade selected must produce the required surface profile and possess physical properties that are compatible with the requirements of this standard. The steel grit shall be a neutral (6.0 to 8.0 pH), rust-free, oil-free, dry, commercial-grade blasting grit with a hardness of 40 to 50 Rockwell C. The size shall be selected to produce the required anchor profile. For removing paint or cleaning aluminum, stainless steel, and fiberglass, in accordance with MIL-P-85891, plastic media may be used as an alternate.

Abrasive residues shall be removed from the surface, leaving it clean and dry before the coatings are applied. The particulate emissions generated during abrasive blasting operations shall be contained. The containment system shall comply with all applicable Federal, state, and local regulations as well as all NASA policies. Exemptions to this requirement shall be coordinated with the local environmental management office.

Care shall be taken in identifying and selecting the aggregate to use in preparing abrasive-sensitive hardware such as bellows, gimbal joints, and other thin-walled components.

3.1.1.2 Degreasing

Degreasing shall be done by cleaning with solvents, washing with detergent, or steam-cleaning in accordance with SSPC-SP 1. This procedure shall be followed when cleaning steel, galvanized steel, or stainless steel. NASA policy prohibits the use of chlorofluorocarbon solvents. Solvents shall be selected in accordance with all applicable Federal, state, and NASA environmental policies. Hardware shall be washed with water when high levels of chloride or other undesirable contaminants are found on the surfaces. This shall be accomplished using standard industrial pressure cleaners with a pressure-versus-volume-output balance that will provide thorough cleaning. High-pressure water cleaning shall not be used as a cleaning method if the existing paint film on a surface exceeds any of the characteristics for toxicity listed in the Toxicity Characteristic Leaching Procedure (TCLP). No chemical shall be added to the water used for the paint blasting/removal operation, and no discharge shall be directed to surface waters. A 40-micrometer (µm) filter mesh shall be used to screen wastewater discharge on operations performed over pervious surfaces. Points of discharge shall be identified before water blasting operations are performed over impervious surfaces. All discharges shall then be channeled to pervious areas by using sandbags and a 40 µm filter mesh. Any residues generated in water blasting operations shall be disposed of in accordance with local environmental regulations. All records of water blasting operations shall be submitted to the local environmental management office. The cleaned surface shall be free of loose coating material, chlorides, dirt, dust, mildew, grinding/welding/cutting debris, and visible contaminants. The surface shall be clean and dry before abrasive blasting is done and coatings are applied.

3.1.2 Protective Coatings, Thinners, and Cleaners

Minimum requirements for each generic type of protective coating specified in 3.1.2.1 are listed in NASA-STD-5008. Thinners and cleaners for each coating shall be procured from the manufacturer of the coating, except for potable water epoxy as specified in NASA-STD-5008. To ensure intercoat compatibility, coating systems consisting of more than one coat shall be products of the same manufacturer, except for inorganic and polysiloxane topcoats. Additional metal-specific protection requirements shall be met in accordance with NASA-STD-5008.

Continuity of use of the coating manufacturer’s system shall be maintained for the duration of an individual project.

All coatings must possess physical properties and handling characteristics that are compatible with the application requirements of this standard, and all coatings must be self-curing.

3.1.2.1 Generic Protective Coatings

a. Inorganic zinc coatings

b. Primer and/or intermediate coatings

   (1) Inhibitive polymide epoxy coatings

   (2) Noninhibitive polymide epoxy coatings

   (3) Water-reducible intermediate coatings

c. Finish coatings

   (1) Aliphatic polyurethane coatings

   (2) Water-reducible topcoats

   (3) Inorganic topcoats

   (4) Polysiloxane topcoats

d. Epoxy mastic coatings

e. Coal tar epoxy coatings

f. Potable water epoxy coatings

g. Nonskid coatings

3.1.2.2 Application of Coatings

All prepared surfaces shall be coated within 6 hours after the surface preparation has been completed and before corrosion or recontamination occurs. Surfaces prepared under temperature and humidity control may be coated after 6 hours but only after a reinspection of the surface preparation confirms that the surface is at the specified cleanliness level.

No coating shall be applied when contamination from rainfall is imminent or when the temperature or humidity is outside limits recommended by the coating manufacturer. To prevent condensation while the coating is being applied, the surface temperature must be at least 3 degrees Celsius (°C) (5 degrees Fahrenheit [°F]) above the dewpoint. Wind speed shall not exceed 25 kilometers per hour (km/h) (15 miles per hour [mph]) in the immediate coating area when using spray application methods.

NOTES

1. Relative humidity (RH) limitations using certain coatings shall be followed:

2. <40% RH solvent-based inorganic zinc coatings, PSX 700, and inorganic topcoats shall not be applied.

3. <40% or >80% RH water-based inorganic zinc coatings shall not be applied.

Any surface that shows corrosion or contamination, regardless of the length of time after preparation, shall be prepared again. The application and handling characteristics of coatings will vary. To obtain optimum performance, adequate written instructions from the manufacturer are essential and must be closely followed in conjunction with the requirements defined in this specification. The manufacturer's recommendations for thinning, mixing, handling, and applying the product shall be strictly followed. Coatings shall be thoroughly worked into all joints, crevices, and open spaces. Newly coated surfaces shall be protected from damage. Any item of equipment or adjacent surface that is not to be coated shall be protected from overspray and splattered coatings. The particulate emissions from spray painting operations shall be contained while the work is being done. The containment system shall be designed to comply with Federal, state, and local regulations as well as NASA policies. Exemptions to this requirement shall be coordinated with the local environmental management organization.

3.1.2.3 Colors

Rack and enclosure colors shall be in accordance with NASA-STD-5008 and FED-STD-595. In some operational areas, textured finishes and colors other than those specified herein have become standard. Racks and enclosures in these areas should receive a matching color and texture.

3.1.2.4 Storage, Mixing, and Application Methods

Storage, mixing, and application methods of coating materials shall be in accordance with NASA-STD-5008.

3.1.2.5 Coating Finish

Each coat of material applied shall be free of runs, sags, blisters, bubbles, and mudcracking; variations in color, gloss, and texture; holidays (missed areas); excessive film buildup; foreign contaminants; dry overspray; etc. Special care shall be taken to ensure complete coverage and proper thickness on welds, corners, crevices, sharp edges, bolts, nuts, and rivets. Each coat of applied material shall be rendered clean, dry, and free from surface contaminants before the next layer of coating is applied.

3.1.2.6 Touchup of Welds and Damaged Coatings

Touchup of welds and damaged coatings shall be in accordance with NASA-STD-5008.

The coating manufacturer's recommended drying and curing times for handling, recoating, and topcoating shall be followed. Coating manufacturer's recommendations shall be followed to test the coating for proper curing. Proper curing of solvent-based inorganic zinc-rich coatings must be verified by ASTM D 4752-03 prior to further coating. Water-based inorganic zinc-rich coatings must be verified for curing, in accordance with the same procedure, but water must be substituted as the solvent.

NOTE

> The cure rate of solvent-based inorganic zinc coatings can be accelerated by rinsing or spraying them with fresh water after an initial overnight drying. The number and frequency of rinse cycles can vary with environmental conditions. Check with the material's manufacturer for recommended procedures.

3.1.3 Sealants and Caulking

Sealants shall be self-curing, single-component, polysulfide rubber or polyurethane material only, conforming to ASTM C 920, Type S, Grade NS, Class 25, use NT, A, and O. If not topcoated, the caulking shall match the color of the joint surface being caulked. If caulking is to be used in a clean-room environment, an approved material with low off-gassing properties shall be selected.

The perimeter of all faying surfaces, joints open less than 13 mm (0.5 in), and skip-welded joints shall be completely sealed. For inorganic zinc primers on carbon steel, apply the sealant to the joint with a caulking gun after applying the primer. For topcoated zinc primers, apply the caulking after applying an intermediate epoxy coat; and for coatings on stainless steel, galvanized steel, and aluminum, apply the caulking before applying the topcoat. The bead shall have a smooth and uniform finish and shall be cured (tacky to the touch) before the topcoat is applied.

3.1.4 Chip-Free Clean-Room Paint

Paint systems for metal substrates in clean rooms shall pass tests for adhesion, off-gassing, flammability, and hypergolic compatibility at the NASA Spaceport Technology Development Office, Kennedy Space Center, Florida. Approved systems are listed in NASA-STD-5008.

3.1.5 Zones of Exposure

Coating system requirements for surfaces located in specific environments are defined in NASA-STD-5008.

3.1.6 Aluminum Racks, Enclosures, Panels, Junction Boxes, and Miscellaneous Details

3.1.6.1 Materials

Aluminum racks, enclosures, junction boxes, and miscellaneous details shall be fabricated from material specified on the applicable drawings and specifications, and in accordance with KSC-SPEC-E-0002. Unless otherwise specified on the drawings, aluminum panels shall be fabricated from 3.2 mm (0.125 in)-thick 6061-T6 aluminum in accordance with SAE AMS-QQ-A-250/11 (6063-T6 and Electronic Panel Stock, a 5052 variant, are also acceptable).

3.1.6.2 Cleaning, Treating, and Coating

Aluminum castings shall be cleaned in accordance with NASA-STD-5008. Aluminum racks, enclosures, panels, junction boxes, and miscellaneous details shall be cleaned, treated, and coated in accordance with the following paragraphs.

3.1.6.2.1 Surface Preparation

All surfaces to be coated shall be clean, dry, and free from oil, grease, dirt, dust, corrosion, peeling paint, caulking, weld spatter, and any other surface contaminants that might prevent subsequent finishes from adhering properly. Aluminum shall be prepared by degreasing and abrasive blasting or mechanical cleaning. Abrasive blasting shall be used whenever possible using nonmetallic abrasives specified in 3.1.1.1. Mechanical cleaning shall be used only when abrasive blasting is impractical, would damage the structure or component, or is prohibited. Aluminum shall be mechanically cleaned in accordance with SSPC-SP 3, using abrasive discs/sheets or other approved methods. Anodized or chemical conversion coated aluminum surfaces shall not be mechanically cleaned.

All corrosion and foreign matter shall be completely removed from the surface and the entire surface slightly roughened.

Abrasive blasting of bellows, gimbal joints, and other thin-walled, abrasion-sensitive components shall be done with walnut shells, plastic media, or an approved equivalent in accordance with 3.1.1.1.

Surfaces that will be underground, submerged, or continuously wetted shall be prepared in accordance with SSPC-SP 5, with a profile of 75 µm to 100 µm (3 mil to 4 mil) in accordance with NASA-STD-5008.

CAUTION

Some aluminum configurations are susceptible to distortion and/or destruction when they are cleaned by abrasive blasting. Special care shall be taken to prevent metal damage by choosing the proper abrasive aggregate, reducing the blast nozzle pressure, and increasing the distance from the nozzle to the surface as necessary. In some cases, such as in the surface preparation of light-gage sheets, these precautions may not be sufficient to prevent distortion and an alternate procedure, such as abrading or mechanical cleaning, must be used to remove corrosion or roughen the surface.

3.1.6.3 Chromate Coatings

Where maximum conductivity is desired (such as in panels), chromate coatings shall be in accordance with MIL-DTL-5541, class 3 (clear chromate is preferred). All other aluminum fabrications, especially those made of softer forming alloys, should be class 1A, yellow chromate. Thorough chemical or mechanical cleaning shall be done before chromate coatings are applied.

3.1.6.4 Protective Coatings

Protective coatings shall be applied to aluminum surfaces as required for each zone of exposure as described in NASA-STD-5008. Surfaces that will be underground, submerged, or continuously wetted shall be coated with coal tar epoxy conforming to NASA-STD-5008.

3.1.6.5 Finish Colors

The topcoat colors for electrical panels shall be in accordance with FED-STD-595 color number 26440, light gray. The interior surfaces of junction boxes shall be finished with FED-STD-595 color number 27875, white. Unless otherwise specified, all other parts and assemblies shall be finish-painted with FED-STD-595 color number 26251, dark gray.

3.1.7 Steel Racks, Enclosures, Junction Boxes, Assemblies, and Miscellaneous Details

3.1.7.1 Materials

Steel racks, enclosures, junction boxes, and miscellaneous details shall be fabricated from the material specified on the applicable drawings and specifications, and in accordance with KSC-SPEC-E-0002.

3.1.7.2 Cleaning, Treating, and Coating

All carbon steel and stainless steel surfaces shall be treated in accordance with NASA-STD-5008. Topcoat systems shall be applied according to the zone of exposure as defined in NASA-STD-5008.

3.1.7.3 Finish Colors

Unless otherwise specified, topcoat colors shall be in accordance with FED-STD-595 color number 26251, dark gray, except for the interior back panel surfaces, which shall be FED-STD-595 color number 27875, white.

3.1.8 Fabricated Chassis

3.1.8.1 Materials

Chassis shall be fabricated in accordance with 75M05218. Cast chassis shall be used in all propellant applications. Aluminum alloy 5052-H32, or its equivalent, is preferred for items with formal bends.

3.1.8.2 Cleaning and Treating

Aluminum chassis shall be cleaned and given a chromate coating in accordance with 3.1.6.3. No chassis shall be given a topcoat over the chromate unless specified on the applicable engineering drawing.

3.2 Welding and Brazing

3.2.1 Welding

The welding of all assemblies, subassemblies, and detail parts shall be in accordance with the drawing requirements and NASA-SPEC-5004. Welding shall be performed only by operators who have met the requirements of NASA-SPEC-5004.

3.2.2 Brazing

The brazing of all assemblies, subassemblies, and detail parts shall be in accordance with drawing requirements and KSC-SPEC-Z-0005. Brazing shall be performed only by operators who have met the requirements of KSC-SPEC-Z-0005.

NOTE

The only electrical connections that can be brazed are ground connections.

3.3 Fasteners

Metallic fasteners shall be chosen to minimize dissimilar metal corrosion. When it is not possible to avoid joining dissimilar metals, the metal of the fastener shall be from a higher potential group than the structure. Then if corrosion does occur, the replaceable hardware items will be affected instead of the basic structure. Refer to GP-777 for the criteria governing the choice of fasteners.

3.3.1 Threaded Fasteners

3.3.1.1 Torque Limits for Threaded Fasteners

Unless otherwise specified, torque values for fastener systems used in shear applications shall not exceed 60 percent of the values shown in Table 1, Table 2, and Table 3. A tolerance of +0 percent and –15 percent shall apply to the specified fastener types.

In circumstances where the nut strength varies from the bolt strength, the torque requirement of the lower strength component shall apply. Torque values for bolts with countersunk heads and threaded fasteners nos. 2 through 10 are specified in MSFC-STD-486. All compression-type electrical connections, such as terminal strips, shall be properly tightened and checked for any indications of looseness.

3.3.1.2 Installation of Nuts on Bolts or Screws

Nuts on bolts or screws shall be installed as follows:

a. Only sockets and wrenches that have no sharp edges or burrs that could damage the fastener plating or coating shall be used.

b. Whenever clearance is a problem, torquing shall be from the bolt head side to the high side of the torque range as specified in Table 1, Table 2, and Table 3.

c. The nut shall not engage any incomplete threads adjacent to the bolt or screw shank.

d. Any identification mark on the washer used under the nut shall be placed opposite the face of the nut.

e. When a self-locking nut is installed or removed, the locking or breakaway torque shall comply with the applicable torque value shown in Table 4.

f. Bolts or screws shall be installed to extend through nuts to comply with the thread minimum protrusion requirement in Table 5.

Table 1. Torque Values for Steel, Cadmium-Plated, Unlubricated Threaded Fasteners

Fastener Size (mm [in])		Grade						Ultimate Tensile Strength					
		SAE2		SAE5		SAE8		862 MPa (125 ksi)		1.10 GPa (160 ksi)		1.24 GPa (180 ksi)	
		N·m	in-lb	N·m	in-lb	N·m	in-lb	N·m	in-lb	N·m	in-lb	N·m	in-lb
5.000	10-32	1.4	12	2.7	24	3.8	34	3.1	27	4.2	37	5.9	52
6.350	0.2500	6.2	55	9.0	80	11.5	102	10.2	90	13.0	115	16.4	145
7.938	0.3125	11.9	105	17.0	150	25.4	225	17.5	155	26.9	238	36.2	320
9.525	0.3750	20.3	180	29.9	265	42.4	375	31.1	275	45.8	405	59.9	530
11.113	0.4375	31.1	275	54.2	480	68.9	610	56.5	500	84.8	750	97.2	860
12.700	0.5000	47.5	420	68.9	610	102.3	905	78.0	690	107.4	950	142.4	1260
14.288	0.5625	70.1	620	101.7	900	151.9	1344	113.0	1000	158.7	1404	217.0	1920
15.875	0.6250	99.4	880	138.3	1224	207.5	1836	146.4	1296	237.3	2100	284.8	2520
19.050	0.7500	155.9	1380	264.4	2340	339.0	3000	282.0	2496	508.5	4500	474.6	4200
22.225	0.8750	210.2	1860	318.7	2820	542.4	4800	433.9	3840	711.9	6300	759.4	6720
25.400	1.0000	318.7	2820	589.9	5220	817.7	7236	623.8	5520	1017.0	9000	1166.2	10320
28.575	1.1250	508.5	4500	854.3	7560	1301.8	11520	901.7	7980	1573.0	13920	1844.2	16320
31.750	1.2500	711.9	6300	1179.7	10440	1789.9	15840	1247.5	11040	2373.0	21000	2562.8	22680

Notes:

1. These torque values apply to coarse and fine threads.
2. A tolerance of +0% and –15% is applicable.
3. Add locking torque of self-locking devices to torque values specified on the drawing.
4. Torque values are for tension applications. Torque values for shear applications shall not exceed 60% of the values shown unless otherwise specified.

Table 2. Torque Values for Steel, Lubricated (Plated, Unplated) Threaded Fasteners

Fastener Size (mm [in])		Grade						Ultimate Tensile Strength					
		SAE2		SAE5		SAE8		862 MPa (125 ksi)		1.10 GPa (160 ksi)		1.24 GPa (180 ksi)	
		N·m	in-lb	N·m	in-lb	N·m	in-lb	N·m	in-lb	N·m	in-lb	N·m	in-lb
5.000	10-32	1.0	9	2.0	18	3.4	30	3.1	27	3.7	33	4.4	39
6.350	0.2500	4.7	42	8.1	72	10.2	90	8.8	78	11.2	99	11.6	103
7.938	0.3125	8.8	78	14.9	132	22.4	198	16.3	144	23.7	210	27.1	240
9.525	0.3750	15.3	135	25.8	228	37.3	330	27.1	240	40.7	360	44.7	396
11.113	0.4375	23.7	210	40.7	360	61.0	540	44.1	390	65.1	576	73.2	648
12.700	0.5000	35.6	315	61.0	540	89.3	790	65.1	576	93.8	830	106.2	940
14.288	0.5625	53.1	470	89.3	790	122.0	1080	97.2	860	135.6	1200	162.7	1440
15.875	0.6250	74.6	660	122.0	1080	183.1	1620	135.6	1200	195.3	1728	217.0	1920
19.050	0.7500	122.0	1080	183.1	1620	298.3	2640	217.0	1920	325.4	2880	359.3	3180
22.225	0.8750	162.7	1440	311.9	2760	474.6	4200	345.8	3060	508.5	4500	569.5	5040
25.400	1.0000	244.1	2160	474.6	4200	718.7	6360	522.1	4620	781.1	6912	881.4	7800
28.575	1.1250	372.9	3300	637.3	5640	1152.6	10200	813.6	7200	1220.4	10800	1383.1	12240
31.750	1.2500	535.6	4740	895.0	7920	1593.3	14100	1139.0	10080	1708.6	15120	1925.5	17040

Notes:
1. These torque values apply to coarse and fine threads.
2. A tolerance of +0% and –15% is applicable.
3. Add locking torque of self-locking devices to torque values specified on the drawing.
4. Torque values are for tension applications. Torque values for shear applications shall not exceed 60% of the values shown unless otherwise specified.

Table 3. Torque Values for Corrosion-Resistant Steel (CRES) and Aluminum Alloy Threaded Fasteners

Fastener Size (mm [in])		CRES 300 Series [552 MPa (80 ksi) Minimum UTS]						Aluminum Alloy [427 GPa (62 ksi) Minimum UTS]			
		Passivated		Silver Plated		Lubricated		Anodized		Lubricated	
		N·m	in-lb	N·m	in-lb	N·m	in-lb	N·m	in-lb	N·m	in-lb
5.000	10-32	3.4	30	2.7	24	2.0	18	1.6	14	1.0	9
6.350	0.2500	7.9	70	6.3	56	4.7	42	5.1	45	2.8	25
7.938	0.3125	14.7	130	11.8	104	8.8	78	9.0	80	5.1	45
9.525	0.3750	25.4	225	20.3	180	15.3	135	16.4	145	9.6	85
11.113	0.4375	42.4	375	33.9	300	25.4	225	26.0	230	15.3	135
12.700	0.5000	56.5	500	45.2	400	33.9	300	36.2	320	21.5	190
14.288	0.5625	79.1	700	63.3	560	47.5	420	52.0	460	28.3	250
15.875	0.6250	113.0	1000	90.4	800	67.8	600	74.0	655	48.6	430
19.050	0.7500	162.7	1440	130.0	1150	97.2	860	106.2	940	65.5	580
22.225	0.8750	257.6	2280	203.4	1800	154.6	1368	162.7	1440	97.2	860
25.400	1.0000	352.6	3120	284.8	2520	210.2	1860	217.0	1920	130.0	1150
28.575	1.1250	528.8	4680	420.4	3720	318.7	2820	325.4	2880	189.8	1680
31.750	1.2500	650.9	5760	522.1	4620	393.2	3480	406.8	3600	244.1	2160

Notes:
1. These torque values apply to coarse and fine threads.
2. A tolerance of +0% and –15% is applicable.
3. Add locking torque of self-locking devices to torque values specified on the drawing.
4. Torque values are for tension applications. Torque values for shear applications shall not exceed 60% of the values shown unless otherwise specified.

Table 4. Required Locking Torque at Room Ambient Temperature

Fastener Size		Pitch (mm)	Threads per Inch	Maximum Locking Torque, Installation or Removal		Minimum Breakaway Torque, Removal	
mm	in			N·m	in-lb	N·m	in-lb
4.76	0.1875	0.8	32	2	18	0.2	2.0
6.350	0.2500	1.0	28	3.5	30	0.4	3.5
7.938	0.3125	1.5	24	7	60	0.7	6.5
9.525	0.3750	1.5	24	9	80	1.1	9.5
11.113	0.4375	1.75	20	11	100	1.6	14.0
12.700	0.5000	1.75	20	17	150	2.0	18.0
14.288	0.5625	2.0	18	23	200	2.7	24.0
15.875	0.6250	2.0	18	34	300	3.6	32.0
19.050	0.7500	2.5	16	45	400	5.7	50.0
22.225	0.8750	3.0	14	68	600	7.9	70.0
25.400	1.0000	4.0	12	90	800	10.2	90.0
28.575	1.1250	4.0	12	102	900	13.2	117.0
31.750	1.2500	4.0	12	113	1000	16.2	143.0
34.925	1.3750	4.0	12	124	1100	18.6	165.0
38.100	1.5000	4.0	12	141	1250	22.0	195.0

Table 5. Minimum Bolt or Screw Thread Protrusion

Pitch (mm)	Threads per Inch	Protrusion	
		mm	in
0.8	32	1.57	0.062
1.0	28	1.80	0.071
1.5	24	2.11	0.083
1.75	20	2.54	0.100
2.0	18	2.82	0.111
2.5	16	3.18	0.125
3.0	14	3.63	0.143
4.0	12	4.24	0.167

3.3.1.3 Torque Values for Standard and High-Strength Steel Fasteners

3.3.1.3.1 Plated

Torque values for tightening clean, cadmium-plated, unlubricated steel fasteners shall be in accordance with Table 1.

3.3.1.3.2 Lubricated

Torque values for tightening steel fasteners lubricated with an approved lubricant (see 3.3.1.6) shall be in accordance with Table 2.

3.3.1.4 Torque Values for 300 Series CRES Fasteners

3.3.1.4.1 Passivated

Torque values for tightening clean, passivated CRES fasteners shall be in accordance with Table 3.

3.3.1.4.2 Plated

Torque values for tightening clean, silver-plated CRES fasteners shall be in accordance with Table 3.

3.3.1.4.3 Lubricated

Torque values for tightening CRES fasteners lubricated with an approved lubricant (see 3.3.1.6) shall be in accordance with Table 3.

3.3.1.5 Torque Values for 430 MPa (62 ksi) Tensile Strength Aluminum Alloy Fasteners (2024-T4, 7075-T6)

3.3.1.5.1 Anodized

Torque values for tightening clean, anodized aluminum fasteners shall be in accordance with Table 3.

3.3.1.5.2 Lubricated

Torque values for tightening aluminum fasteners lubricated with an approved lubricant (see 3.3.1.6) shall be in accordance with Table 3.

3.3.1.6 Lubricants

Unless otherwise specified, lubricants equal to or interchangeable with those listed below may be used when necessary to prevent galling or other damage to fastener threads or bearing surfaces. Any lubricant used in liquid oxygen (LO_2) systems or gaseous systems that are used in pressurizing or purging LO_2 systems shall meet the compatibility requirements of NASA-STD-6001.

a. Everlube 811 (Everlube Corporation)

b. Drilube 701 (Drilube Company, 711 West Broadway St., Glendale, CA 91204 [CAGE 06186])

c. Molykote Z (Alpha Molykote Corporation)

d. EC1730 (Acheson Colloid Company, 1600 Washington Ave., P.O. Box 11747, Pt. Huron, MI 48061 [CAGE 70079])

e. KEL-F-90 (Minnesota Mining and Manufacturing Company)

f. Lubricants that are applied to fasteners qualified under NASM 25027

g. SAE AMS 2518, thread compound, antiseize, graphite-petrolatum

h. MIL-PRF-46010, lubricant, solid film, heat-cured, corrosion-inhibiting

i. HD Calcium Grease No. 2 (Continental Oil Company)

NOTE

When specified on drawings for space vehicles and equipment, grease shall be applied to the structure and shank, threads, and washers of the fastener system. After torquing, excess grease shall be removed with a lint-free cloth or paper towel.

3.3.1.7 Self-Locking Fasteners

The measured locking torque of self-locking fasteners shall be added to the specified torque to obtain the final applied torque.

3.3.1.8 Cotter Pin, Lockwire, and Safety Cable Securing

When securing fasteners with cotter pins, safety cable, or lockwire, tightening may continue beyond the specified torque to permit slot and hole alignment provided the final torque does not exceed the specified torque by more than 10 percent. AIA/NAS NASM 33540 lists the specifications and requirements for installation of cotter pins, lockwire, or safety cable.

3.3.1.8.1 Safety Cable

A safety cable system consists of one tool for tensioning, crimping, and cutting. After a cable is threaded through the fasteners and a loose ferrule inserted, the calibrated crimping tool tensions the assembly, crimps the loose ferrule, and cuts the excess cable flush to the ferrule. Figure 1 is a diagram of a tension tool, ferrule, and calibration unit. Figure 2 illustrates typical safety cable installations.

3.3.1.9 Nonmetallic Fasteners

Nonmetallic fasteners are useful in applications requiring good thermal and electrical insulation and good corrosion resistance. They shall not be used in applications requiring high-tensile or shear strength or those operating in high temperatures.

3.3.2 Adhesives

Adhesives shall not be used to mount items normally subject to replacement or to secure parts requiring removal when equipment is serviced.

3.3.3 Rivets

Although rivets were previously used at KSC, they are no longer approved for use in mounting items normally subject to replacement or to secure parts that must be removed when equipment is serviced. If rivets are used in new design, they shall be installed in accordance with MSFC-STD-156 unless otherwise specified on the applicable drawings.

3.3.3.1 Chips, Burrs, and Foreign Material

Before parts are riveted together, all chips, burrs, and foreign material shall be removed from the mating surfaces. Burrs may be removed from rivet holes by chamfering to a depth not to exceed 10 percent of the stock thickness or 0.81 mm (0.032 in), whichever is less.

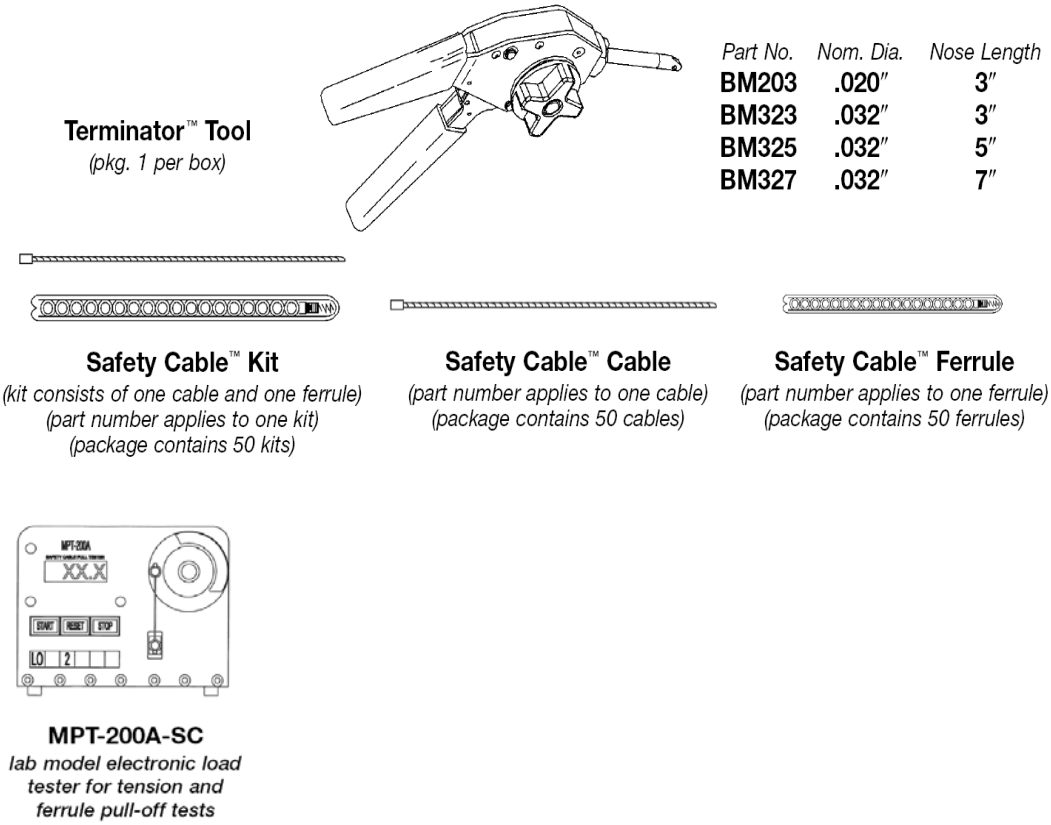

Choose a length that allows the cable to route through the pattern and then into the tool using the formula: LONGEST PATTERN LENGTH + TOOL NOSE LENGTH + 7″ = CABLE LENGTH

SAFETY CABLE™ KIT; .032″ DIAMETER; 18″, TYPE 321 CRES.

K 30 B 18

- 18 — Cable Length (In Inches)
- B — Cable/Ferrule Material (See Chart)
- 30 — Nominal Cable/Ferrule Diameter (.020 or .032)
- K — Product Code
  - K: KIT [Cable & Ferrule]
  - C: CABLE ONLY
  - F: FERRULE ONLY

MATERIAL OPTIONS		
A:	AMS5687 (Inconel 600)	AS3509
B:	AMS5689 (321 CRES)	AS3510
C:	AMS5697 (304 CRES)	AS3511

Figure 1. Safety Cable, Tension Tool, Ferrule, and Calibration Unit

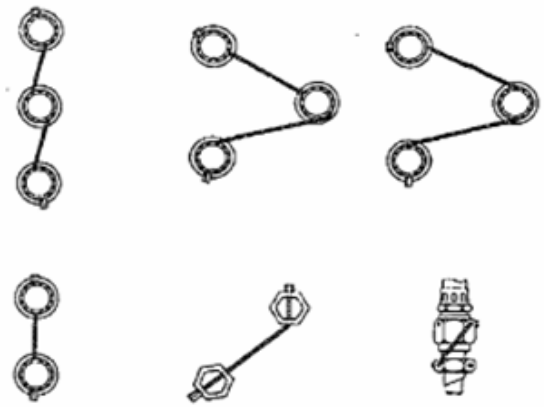

Safety Cable, Typical Installation (Standard Hardware)

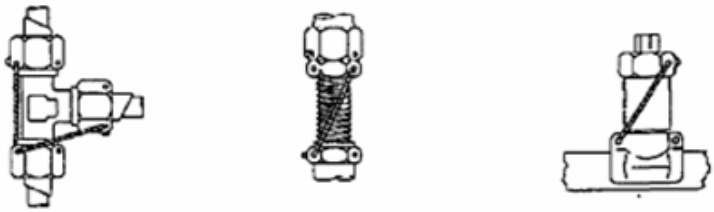

Safety Cable, Typical Installation (Tube Couplings)

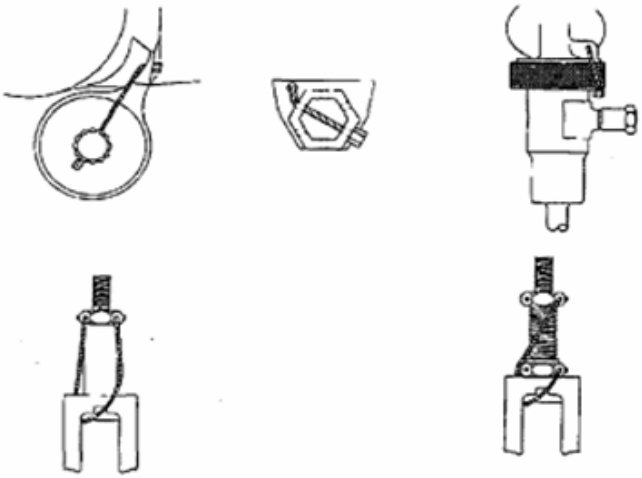

Safety Cable, Typical Installation (Other Installations)

Figure 2. Typical Safety Cable Installations

3.3.3.2 Rivet Substitutions

Rivet substitutions shall not be made without the prior approval of the contracting officer except when a buildup of tolerances makes it necessary to use longer or shorter rivets than specified. In this case, the assembler may make a substitution without requesting approval.

3.4 Identification and Marking (of GSE)

Markings shall be specified on the detail drawings and in accordance with KSC-STD-E-0015. This includes, but is not limited to, silk screening, engraving, rubber stamping, stenciling, die stamping, photoetching, hot stamping, thermal transfer, computer printing, identification plates, welding, and cast or forged markings. All identification markings shall be above the component, if possible, unless otherwise specified on the drawing. The finished product shall display a professional appearance; and the marking shall not have ragged edges, unbalanced characters, or excess paint (the latter is applicable to silk screening only). Markings for shipment shall be in accordance with MIL-STD-129.

3.5 Electrical Wiring, Internal

All wiring shall be installed in accordance with applicable engineering drawings, NFPA 70, the National Electrical Code (NEC), and the following paragraphs.

3.5.1 Plenum-rated and Non-plenum-rated

Local, state, and Federal regulations regarding the required use of plenum-rated and non-plenum-rated cable and wiring shall be followed. According to the NEC, a plenum is “a compartment or chamber to which one or more air ducts are connected and that forms part of the air distribution system.” To qualify as a plenum, the space above an acoustic tile ceiling or below a raised floor would have to extend above or below other rooms in the same building, respectively, or be open to ducts connecting it to other parts of the building. The concern is that during a fire, burning material in a plenum air space can create smoke and fumes that can travel through air ducts to the entire building. For this reason, there are codes to restrict the types of materials (such as wiring and cable) that can be placed in the plenum.

According to the NEC, plenum-rated wire and cable must be used in plenum air spaces. Plenum-rated wire and cable have a fire-retardant insulation, which inhibits the propagation of fires and toxic fumes. The local fire marshal is the definitive source for determining the use of plenum-rated or non-plenum-rated cable and wiring. Contact the local fire marshal if questions arise regarding the use of plenum-rated wiring and or cables in a specific environment.

3.5.2 Class I, Division 2

Because of the nature of business at KSC, some areas are considered (classified as) hazardous locations. NFPA 70, Section 500, defines Class I, Division 2, as a location:

a. in which volatile flammable gases, flammable liquid-produced vapors, or combustible liquid-produced vapors are handled, processed, or used, but in which

the liquids, vapors, or gases will normally be confined within closed containers or closed systems from which they can escape only in case of accidental rupture or breakdown of such containers or systems or in case of abnormal operation of equipment, or

b. in which ignitable concentrations of flammable gases, flammable liquid-produced vapors, or combustible liquid-produced vapors are normally prevented by positive mechanical ventilation and which might become hazardous through failure or abnormal operation of the ventilating equipment, or

c. that is adjacent to a Class I, Division 1 location, and to which ignitable concentrations of flammable gases, flammable liquid-produced vapors, or combustible liquid-produced vapors above their flash points might occasionally be communicated unless such communication is prevented by adequate positive-pressure ventilation from a source of clean air and effective safeguards against ventilation failure are provided.

NFPA 70, Section 500, states "This classification usually includes locations where volatile flammable liquids or flammable gases or vapors are used but that, in the judgment of the authority having jurisdiction, would become hazardous only in case of an accident or of some unusual operating condition." If cable or wiring is being fabricated for use in a Class I, Division 2, location, the cable/wire must be rated/certified for such use. See vendor specifications for information on Class I, Division 2, certification.

3.5.3 Wire

Wire that is 1.27 mm (AWG 16) or less in diameter shall be in accordance with MIL-DTL-16878/1 (tin-coated/polyvinyl-chloride [PVC]-insulated) for normal usage and MIL-DTL-16878/25 (nickel-coated copper/polytetrafluoroethylene [PTFE]-insulated) for high-temperature applications. Wire that is 1.63 mm (AWG 14) or more in diameter shall conform to SAE AS 50861. All conductors shall be stranded unless otherwise specified by the applicable engineering drawing. Shielded wire/cable used at KSC shall be in accordance with 120E3100001 (for heavy-duty GSE cables), 120E3100002 (for light-duty GSE cables), and KSC-GP-864. KSC-SPEC-E-0024 (for PVC-jacketed medium-duty wires/cables) and KSC-SPEC-E-0031 (for neoprene-jacketed heavy-duty wire/cables) may be used for legacy systems. KSC-SPEC-E-0024 and KSC-SPEC-E-0031 are not recommended for new designs. Wirewrap wire shall conform to MIL-W-81822 and the applicable engineering drawing. Uninsulated (tinned copper) bus wire shall conform to A-A-59551, type S (soft). NEMA WC 63.1 defines the minimum electrical performance and allowable conductor sizes, stranding, and shielding for premise wiring cables for voice and data applications including unshielded and shielded 100-ohm (Ω) twisted pairs, Category 5e, and 150 Ω shielded twisted pair cables. The material and mechanical characteristics for these cables are covered under UL 444/CSA C 22.2, No. 214. NEMA WC 66 defines the minimum electrical performance and allowable conductor sizes, stranding, and shielding for premise wiring cables for voice and data applications for Category 6 and Category 7 shielded and unshielded twisted pair cables. The material, mechanical, and physical characteristics for these cables are also covered under UL-444/CSA 22.2, No. 214.

3.5.4 Routing

Routing and connection of wires shall be either in accordance with the applicable wiring tabulation drawings, schematics, and fabrication drawings or, if no drawings apply, in a logical fashion that gives consideration to avoiding interferences and for installing any associated wiring required. Wires and cables shall be placed and protected so that they are not in contact with rough surfaces or sharp edges and so that they have enough clearance from heat-emitting parts to avoid damage or deterioration. Signal and power cable bundles shall be routed separately whenever possible. Fiber-optic cables should not be routed beneath large bundles of cables or with excessive bends in the fiber-optic cable to preclude deformation or damage to the cable jacket, cladding, or glass core.

3.5.5 Grouping

Unless otherwise specified, wires shall be placed so that they lie parallel in groups where possible, and crossovers shall be held to a minimum. Harnesses in panels, boxes, and similar locations shall be divided neatly into groups. The harnesses shall be divided into groups according to their functions (signal, power, etc.). Signal wires and power wires shall be grouped separately whenever possible (see Figure 3).

3.5.6 Breakouts

Wires and cables shall be properly supported and secured to prevent undue stress on conductors and terminals. Unless otherwise specified, each wire shall be tied to the bundle at the point of breakout. When breaking out from a group of wires to a terminal strip, the bundle shall have adequate clearance from the terminal lug so that a service loop may be formed. The service loop shall be long enough to allow the wire to be cut, stripped, and terminated two additional times (see Figure 3). Unless otherwise specified, breakouts of wires shall be perpendicular to the bundle. Plastic cableway, metallic conduit, and metallic trays are acceptable for use in wiring breakouts. If a wiring duct is used, the service loop shall be left in the wiring duct at each point of the breakout.

3.5.7 Wire Stripping

Insulation stripping tools and procedures shall be in accordance with NASA-STD-8739.3 and Table 6.

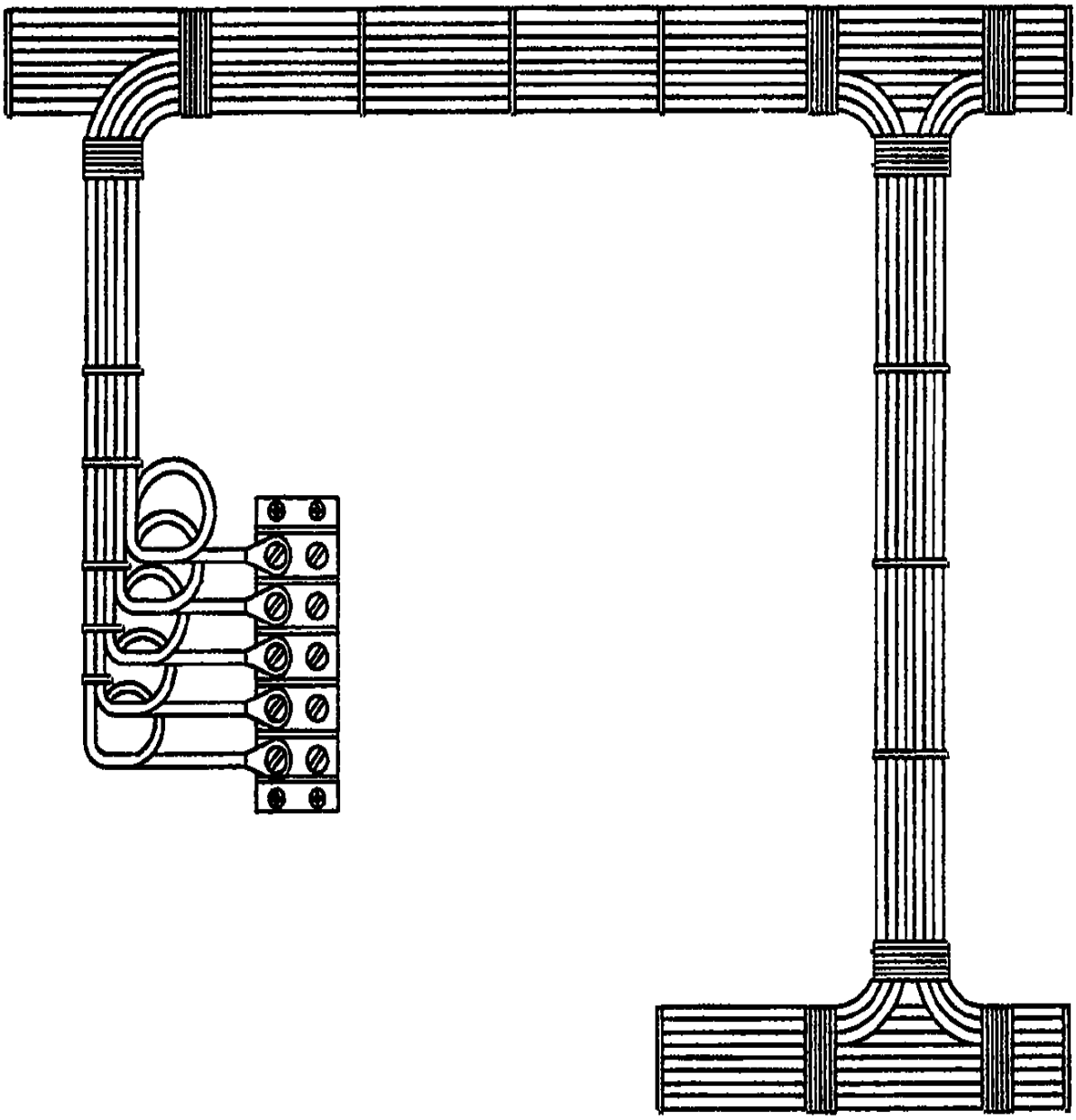

Figure 3. Harness or Wire Bundle

Table 6. Insulation Clearances for Wire

Wire Diameter (mm [AWG Size])	Clearance	
	Minimum (mm [in])	Maximum (mm [in])
Smaller than 0.8 (#20)	Visible clearance	1.5 (0.060)
0.8 (#20) through 2.6 (#10)	0.8 (0.03)	Two times diameter of insulation
3.3 (#8) through 6.6 (#2)	0.8 (0.03)	9.5 (0.38)
7.3 (#1) and larger	0.8 (0.03)	12.7 (0.50)
Coaxial and special wires	According to engineering drawing	

3.5.8 Terminals

Terminations shall be in accordance with 3.6 of this specification. Terminals shall be in accordance with the following paragraphs unless otherwise specified on the detail drawings.

3.5.8.1 Modular Terminal Junction Systems

Modular terminal junction systems shall be in accordance with SAE AS 81714.

3.5.8.2 Screw Terminals

Molded barrier terminal boards shall be in accordance with A-A-59125 or SAE AS 27212. Other types shall be in accordance with 3.6.1.1 of this specification. In accordance with SAE AS 7928, terminal lugs shall be used to terminate the wire wherever the screw terminal is not captive or where stranded wire is used. After wiring, the screw terminals shall be torqued to the values given by the applicable specification or 3.3.1 (or tightened snugly if the torque value is not specified).

3.5.8.3 Compression Terminals

Compression terminals shall be in accordance with 3.6.1.

3.5.8.4 Solder Terminals

Solder terminals shall be in accordance with A-A-59126.

3.5.8.4.1 Terminal Swaging

Swaging has been used historically at KSC to provide termination to terminal boards and printed wiring and/or printed circuit boards (PCBs). If swage repair of legacy terminal boards, wiring boards, and/or PCBs is required, the swage repair shall be accomplished in accordance with the following paragraphs. Terminals may be slightly deformed when they are installed. Swaged terminals shall not be loose after soldering.

a. **Tool selection:** A rolled swage tool shall be used when the swage is terminated directly to the terminal board or the noncircuit side of a printed wiring board or PCB. A full funnel swage tool shall be used when the swage is formed in contact with a printed conductor pattern. An elliptical funnel swage tool shall be used when the swage is formed in contact with a printed conductor pattern having a plated through-hole.

b. **Press adjustment:** A separate press adjustment shall be made for each type of terminal to be swaged on the production board.

c. **Rolled swage:** Press adjustment for a rolled swage shall be made as follows:

(1) Install the tools into the press and vertically align the punch and anvil.

(2) Maintaining the base of the terminal in contact with the board surface, adjust the press until the rolled swage produced on the terminal is complete and uniform (see Figure 4, view A).

(3) Install as many terminals as necessary in the preproduction sample until the press adjustment is visually acceptable.

(4) Using a production-type device suitable for soldering the terminals being tested, heat each terminal on the preproduction sample to 260 °C ± 28 °C (500 °F ± 50 °F) for a minimum of 15 seconds.

(5) Apply a minimum torque of 0.14 newton meter (N·m) (20 inch-ounces) to each terminal to ensure tightness.

(6) Visually inspect the rolled swage preproduction sample to the acceptance criteria specified in 3.5.8.4.1.f.

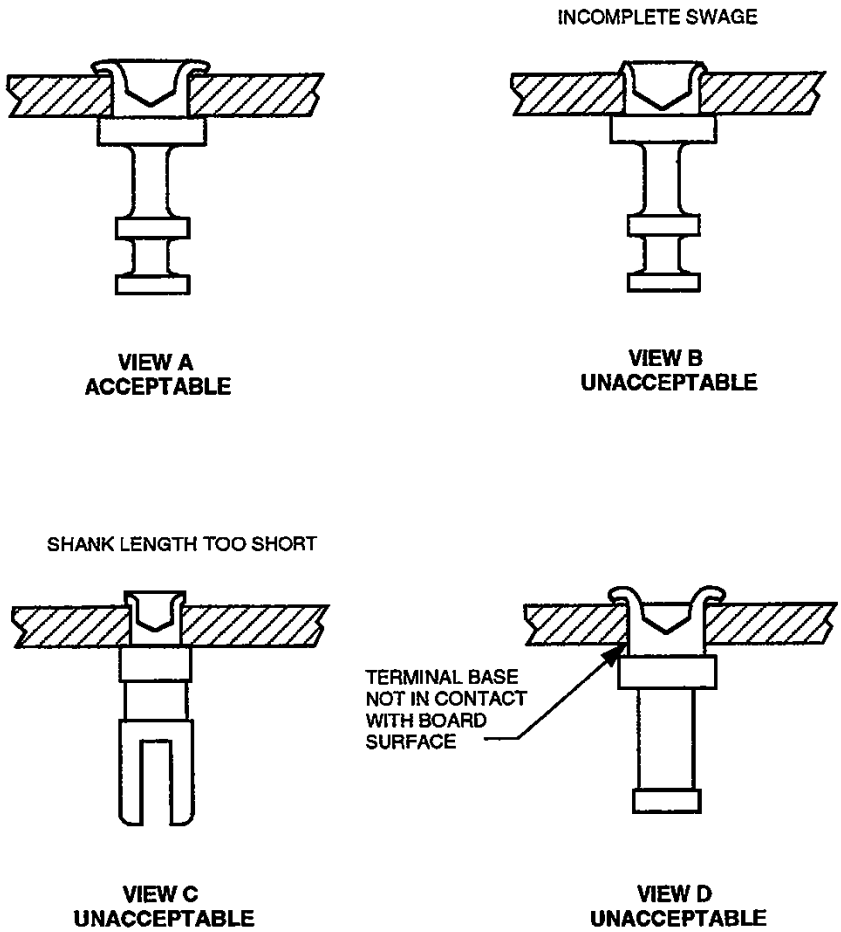

Figure 4. Rolled Swage Terminals

d. **Funnel swage:** Press adjustment for a full or an elliptical funnel swage (see Figure 5) shall be accomplished as follows:

(1) Install swaging tools capable of producing a funnel swage having an included angle of 36 degrees to 60 degrees into the press and vertically align the punch and anvil.

(2) Maintaining the base of the terminal in contact with the board surface, adjust the press until the swage tool enters the terminal shank far enough so the angle of the funnel swage produced on the terminal begins at the circuitry (see Figure 6, view A).

(3) Visually inspect the funnel swage preproduction sample to the acceptance criteria specified in 3.5.8.4.1.f.

NOTE

All gold-plated PCB surfaces shall be properly prepared for soldering prior to swaging.

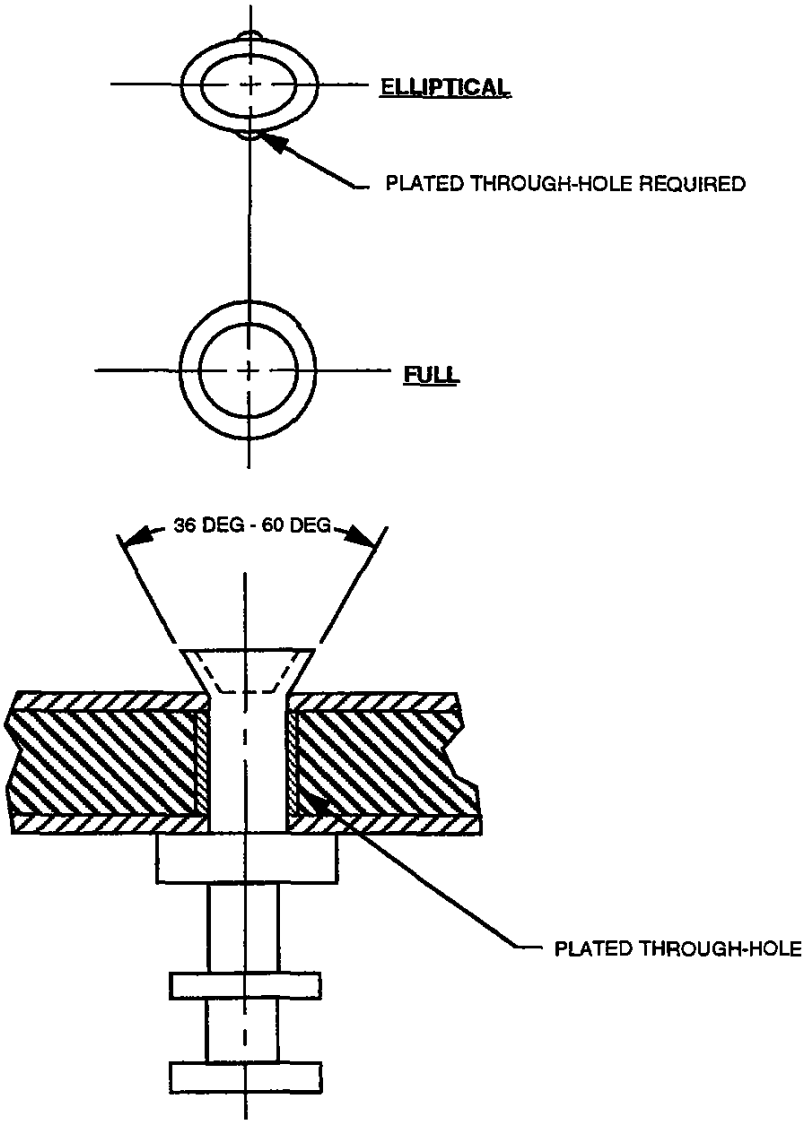

Figure 5. Elliptical Funnel Swage Terminals

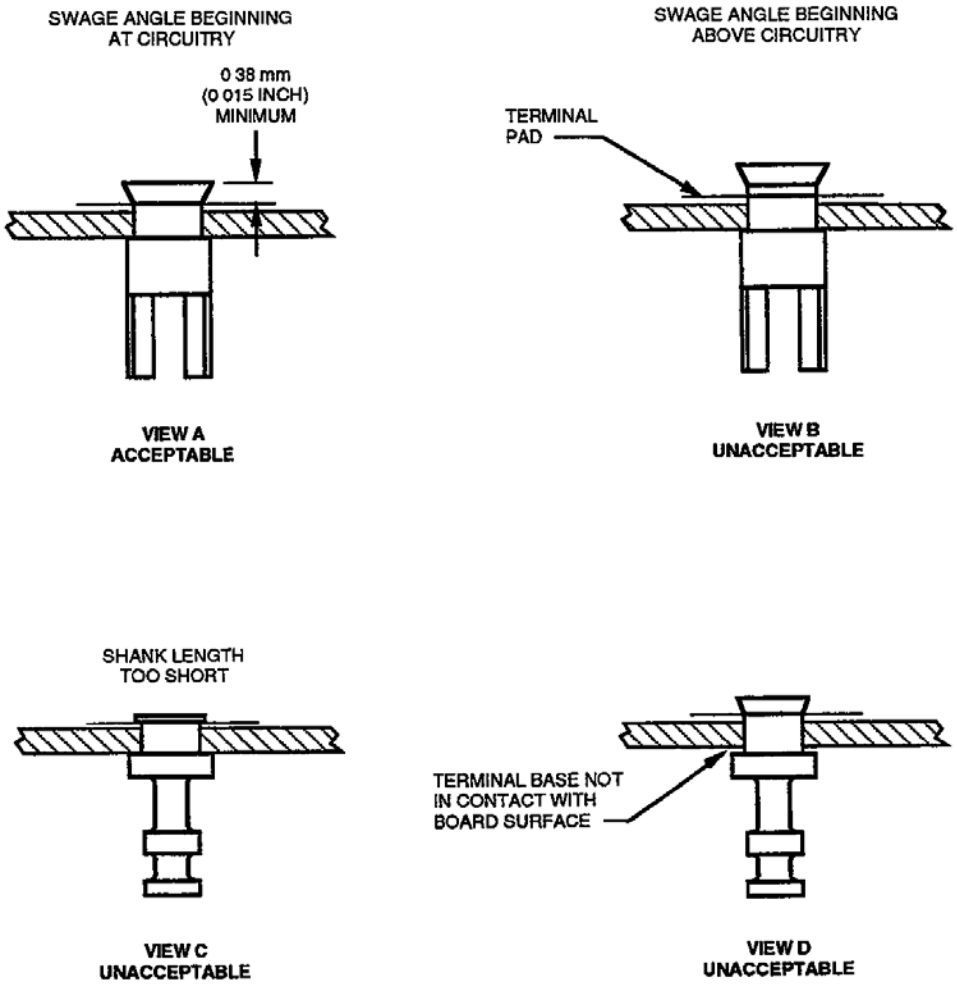

Figure 6. Funnel Swage Terminals

e. **Inspection:** A first article inspection shall be performed on a production board before proceeding with a production run and each time thereafter when a change in press adjustment is made. Each completed production board shall be inspected for conformance to the design drawing and the acceptance criteria specified in 3.5.8.4.1.f, using 7-power to 10-power magnification. None of the rejection characteristics specified in 3.5.8.4.1.g shall be visible.

f. **Acceptance criteria:** Swaged terminals shall be accepted if they meet the following criteria:

(1) Terminals are oriented in accordance with the design drawings.

(2) The terminal base is in 360-degree contact with the board surface or conductor pattern, as applicable.

(3) The rolled swage is complete and uniform.

(4) The funnel swage, beginning at the conductor pattern, has an included angle of 36 degrees to 60 degrees and extends 0 38 mm (0.015 in) minimum beyond the conductor surface.

g. **Rejection criteria:** Swaged terminals and terminal boards shall be rejected for any of the following criteria:

(1) Terminals are visibly bent.

(2) Terminals have cracks, nicks, or peeled or damaged plating with the base metal exposed.

(3) Terminals or board material is damaged by misaligned, improperly fitted, or worn swaging tools, etc.

(4) Terminals are not approved by the procuring activity.

(5) The board material has continuous discoloration between adjacent terminals, between adjacent electrical conductor paths, or between terminals and adjacent electrical conductor paths.

(6) The board material is measled at the base of the terminal.

(7) The conductor pattern is delaminated at the base of the terminal.

(8) Radial movement of rolled swage terminals is visible after applying a minimum torque of 0.14 N·m (20 inch-ounces).

(9) Terminals have cuts, scratches, or other damage that could entrap moisture or contamination.

3.5.8.4.2 Rework

A rejected terminal board shall be reworked to correct any fault other than those listed in 3.5.8.4.1.g (5), (6), and (7). After rework, the rejected board shall be reinspected.

3.5.8.5 Solderless Wrap Terminals

Solderless wrap terminals shall conform to SAE AMS 2695C.

3.5.9 Lacing and Tying

Lacing and tying of cable harnesses and bundles has typically been done with twine. According to MILT-713, "The twine is intended for lacing and tying telephone switchboard cable forms, hookup wires, cable ends, aircraft cable bundles, electrical and electronic equipment, and electrical wire-harness."

Lacing and tying of GSE electrical harnesses and bundles shall be in accordance with NASA-STD-8739.4 and the following paragraphs.

3.5.9.1 Lacing

Lacing twine shall be in accordance with MIL-T-713, type P, class 2, using black or a contrasting color. Lacing operations shall be in accordance with Table 7 and Table 8.

Table 7. Spacing of Lacing From Terminations

Harness-Bundle Diameter		Distance Between Terminals or Connectors and Lacing	
mm	**in**	**mm**	**in**
Less than 13	Less than 0.5	50	2
13 to 25	0.5 to 1	75	3
25 or larger	1 or larger	100	4

Table 8. Spacing of Lacing in the Harness

Harness-Bundle Diameter		Stitching Interval	
mm	**in**	**mm**	**in**
Less than 13	Less than 0.5	19	0.75
13	0.5	38	1.5
25	1	50	2
Larger than 25	Larger than 1	75	3

Lacing bars shall be used as necessary to support wiring groups and harnesses. If a harness assembly or wire bundle contains branches or conductor breakouts, the following procedures shall apply:

a. The main trunk of the wire bundle or harness shall be laced between connectors or components (see Figure 3, shown previously).

b. A terminating serve shall be constructed on the main truck of the harness or wire bundle at the beginning of a wye branch.

c. The branch shall be continuously laced, beginning with a serve at the junction of the wye.

d. Terminating serves shall be placed on both sides of a tee junction.

e. Unless otherwise specified, a lacing stitch shall not be placed between each wire breakout. A double lock-stitch locked with a square knot shall be used when wires in a bundle are routed to a mounted component or component receptacle.

f. A branch that runs between two main trucks shall be served at both the junctions.

g. Spacing shall be in accordance with Table 7 and Table 8.

WARNING

Cut ends of cable ties shall not protrude to the extent that the sharp edges may injure a person.

3.5.9.2 Cable Ties and Clamps

Plastic cable ties and approved cable clamps may be used on harness or wire bundles at the discretion of the design activity. The ties shall be mounted snugly on the assembled conductor and shall be capable of being locked to prevent loosening or opening. When installing wires, cables, or harness bundles in vertical or horizontal cable tray systems, NEMA VE 2 (NEMA Standards Publication VE 2-2006) advises, “Cables may be fastened to the cable tray by means of cable clamps or cable ties. Generally, cables are fastened every 450 mm (18 in) on vertical runs. Although not required by the NEC, single conductor cables can be fastened on horizontal runs to maintain spacing, prevent movement due to fault-current magnetic forces, and ensure that the cable is confined within the cable fill area. When using cable clamps, the clamps should be sized correctly and only tightened enough to secure the cable without indenting the jacket. The same precaution should be observed with cable ties, and they should be applied with a pressure limiting device. Extremely long vertical drops introduce a new set of problems requiring special considerations. The weight per meter (foot) of the cable multiplied by the number of meters (feet) in the vertical drop will, in many cases, exceed the load carrying capacity of the cable tray component, such as the one or two rungs supporting this weight, and could exceed the allowable cable tension. The cable weight should be supported in such a manner as to prevent damage to the cable tray or cable during this type of installation. As the cable is installed, intermediate

supports should be installed on the vertical drop to break the cable load into segments supported at multiple places." Plastic cable ties and approved cable clamps shall be installed on harness or wire bundles in accordance with NASA-STD-8739.4.

3.5.10 Termination Order

Unless otherwise specified, the wiring of connector contacts to terminal board terminals shall proceed pin-to-terminal in corresponding numerical or alphabetical order (e.g., pin A or 1 on the connector goes to terminal number 1, pin B or 2 goes to terminal number 2). The wiring between terminal boards shall maintain the numbering sequence on each end of the connecting cable (i.e., a conductor wired to terminal number 1 on one end of the cable shall be wired to terminal number 1 on the board at the other end).

3.5.11 Molding and Potting Electrical Connectors

Molding and potting of electrical connectors is done to prevent damage, degradation, and deterioration of electrical connectors that are exposed to the environment and to ensure electrical integrity, improve robustness, and increase the connectors' useful life. Epoxy resin potting compositions and elastomeric compounds shall be used for molding and potting in accordance with section 3.11.6 of this specification. The connectors used shall be in accordance with 3.11.3. Molding and potting is required for all outdoor applications where a connector's integrity could be compromised (1) by the environment or the effects of vibration, (2) to inhibit gas migration, or (3) to provide addition strain relief and support. This includes molding and potting of exterior connectors on enclosures, junction boxes, and remote inputs/outputs (RIOs), and potting only for the interior connectors.

3.5.12 Splicing

The splicing of conductors and/or shields shall not be permitted unless specified by the applicable drawing or approved by the contracting officer. When approval is given, one of the following splices should be used (1) soldered sleeve splices in accordance with NAS 1744 are acceptable for use, (2) insulated crimp splices in accordance with SAE AS 7928A are preferred, or (3) for applications where environmental sealing and small size and light weight are important, splices in accordance with MIL-S-81824. See 82K03874 for splicing instructions.

3.5.13 Terminating and Grounding Shields

Metallic shields shall be employed in cables to reduce the electromagnetic coupling between electrical circuits and their environment. Terminating and grounding shields shall be installed in accordance with NASA-STD-8739.4. A variety of shielding configurations are used in instrumentation systems at KSC, but all will be included in one of the following categories. These procedures apply to cables used for transmitting direct current (DC) and alternating current (AC) power and low-frequency analog and digital signals with harmonics of significant power not exceeding approximately 1 megahertz (MHz).

At higher frequencies, radiation and other high-frequency phenomena may require a departure from the termination methods in this specification. Coaxial and balanced-pair cables used for

radio frequency (RF) and video transmission and outside-plant telephone cables are specifically excluded (see Figure 7 through Figure 10 for typical terminations). Specific termination configurations for overall shielded cables may be found in the cable subassembly drawing specified in the statement of work (SOW). See 79K04613 or 82K03874 for shield termination instructions and/or details.

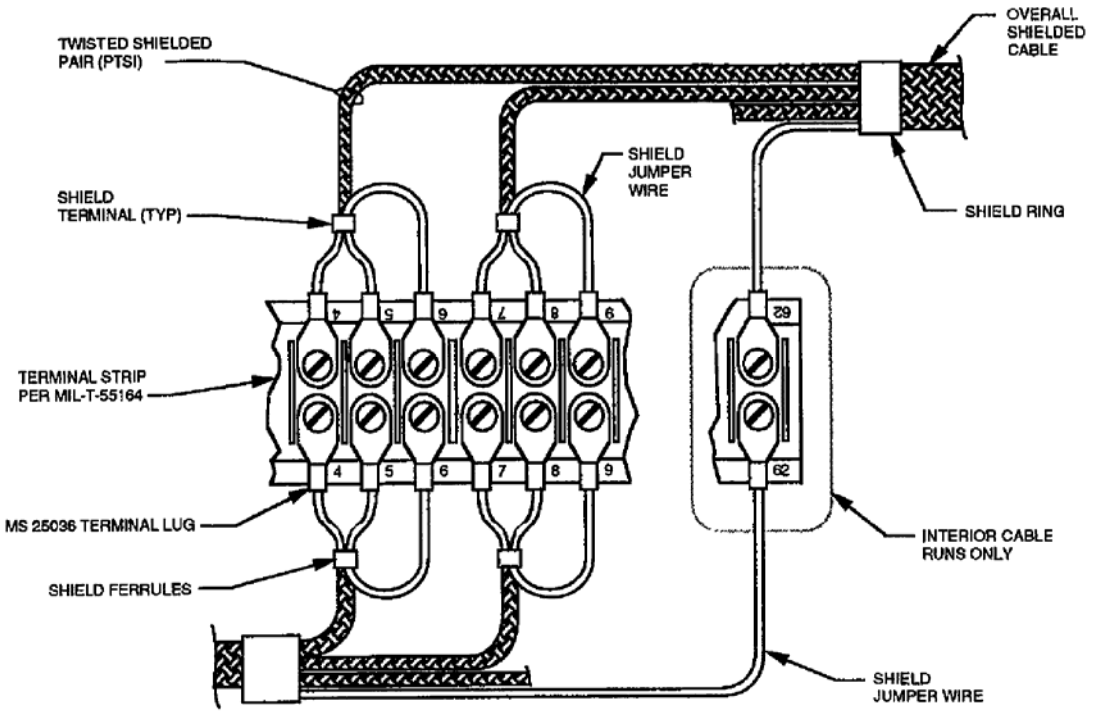

Figure 7. Cable Termination Hardware

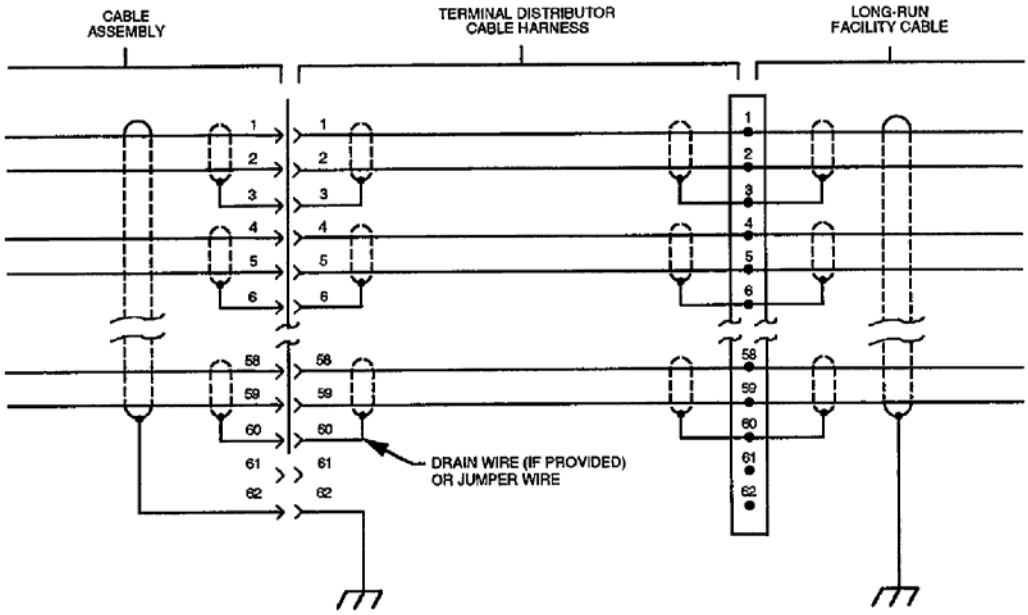

Figure 8. Typical Termination Configuration for Overall Shielded Cable With Insulated Conductor Shields

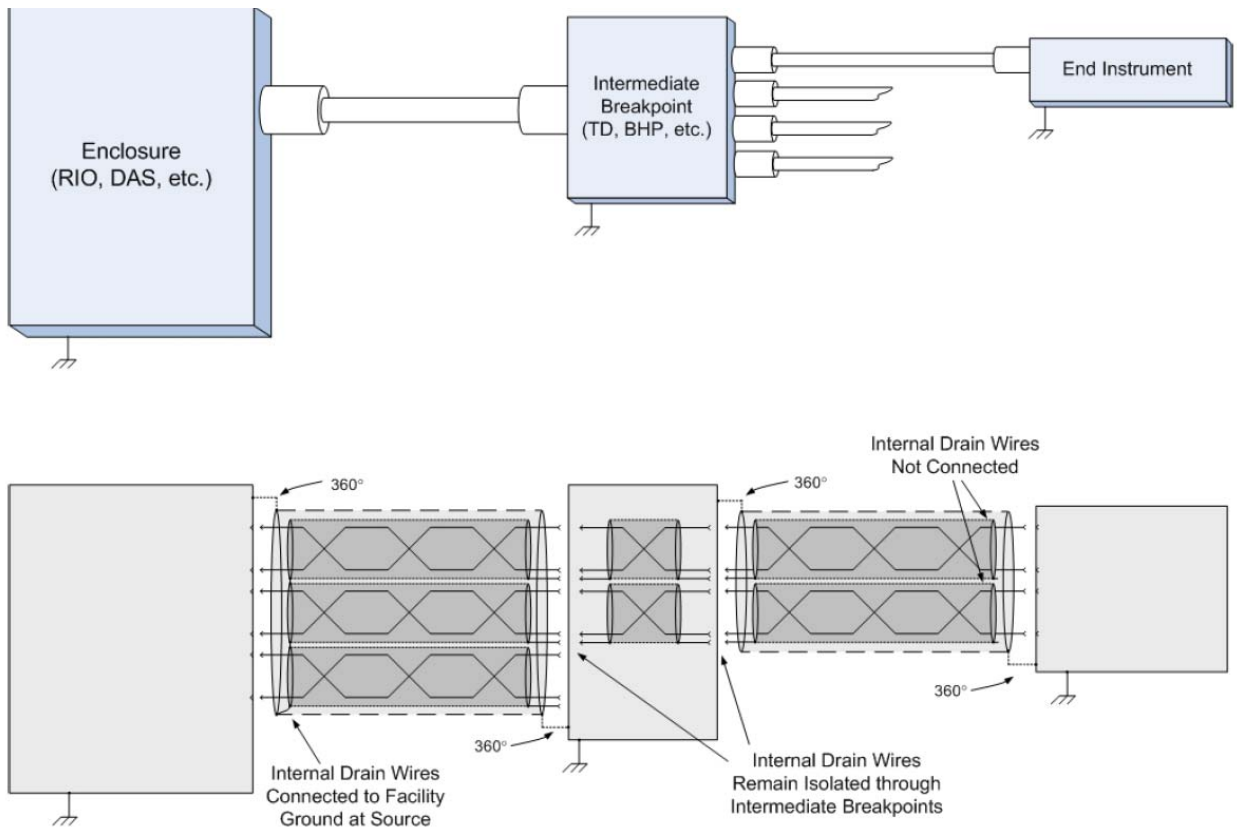

Figure 9. Graphic Representation of Individual Shields From Source, Through Intermediate Break Points, to End Instrument

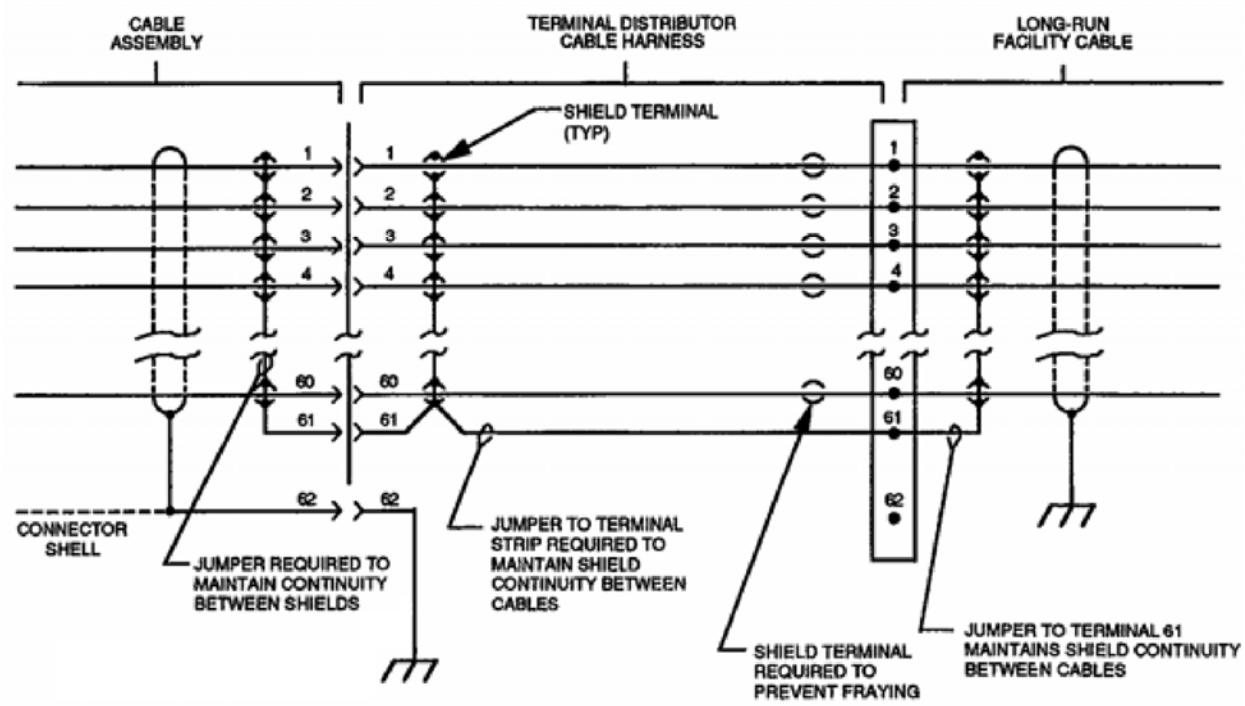

Figure 10. Typical Termination Configuration for Overall Shielded Cable With Uninsulated Conductor Shields

3.5.13.1 Insulated Shields Over Individual Conductors or Groups of Conductors

Insulated shields over individual conductors or groups of conductors shall be terminated in a manner that provides electrical isolation between individual shields and between shields and ground and electrical continuity of the shields from end terminal point to end terminal point except at an instrument, sensor, transducer, or other end item, as described below:

a. When the cable terminates on a terminal strip, the shields shall be terminated with shield terminals and each shield connected to the strip terminal point adjacent to the last conductor of the conductor grouping common to the shield.

b. When the cable terminates in a connector and sufficient space exists within the connector, the shields shall be terminated with insulated shield terminals. Each shield shall be connected to the connector pin or socket adjacent to the last conductor or conductor grouping common to the shield (see Figure 8). The exception would be if the connector interfaces with an end item. In this case, the insulated shields over individual conductors or groups of conductors shall be floated within the end item connector to isolate them from the end item connector, from each other, from the conductors, and from the overall shield.

c. Insulated shields over individual conductors or groups of conductors shall be carried from racks and enclosures through intermediate breakpoints and be floated at instrument, sensor, transducer, or other end item, as specified in engineering drawings and documentation. See Figure 9 for details.

In accordance with NASA-STD-8739.4, individually isolated conductor shields may be grouped together and terminated at a common pin in a connector or to a common ground if specified in an engineering drawing. No more than four shields and one drain wire may be terminated at/in the common point.

3.5.13.2 Uninsulated Shields Over Individual Conductors or Groups of Conductors

Uninsulated shields over individual conductors or groups of conductors shall be terminated in a manner that provides electrical isolation of the shields from ground and electrical continuity of the shields from end terminal point to end terminal point, except at an instrument, sensor, transducer, or other end item as described below:

a. When the cable terminates on a terminal strip, the shields shall be terminated with shield terminals jumpered together and connected to the strip terminal point adjacent to the last cable conductor. The terminal strip ends of harness shields shall be terminated with shield terminals to prevent fraying but do not require jumpers between shields and are not connected to the terminal strip (see Figure 10).

b. When the cable terminates in a connector, the shields shall be collected under a common shield terminal and connected to the connector pin or socket adjacent to the last cable conductor, maintaining electrical isolation between the conductor shields and the overall shield and connector shell. The exception would be if the connector interfaces with an end item. In this case, the uninsulated shields over individual conductors or groups of conductors shall be floated within the end item connector to isolate them from the end item connector, from the conductors, and from the overall shield. The method of terminating harness shields in connectors shall be the same as specified for cables, except that a wire shall be extended from the common shield terminal back to the terminal strip and from there shall be connected to the strip terminal point to which the cable conductor shields are connected (see Figure 10).

3.5.13.3 Overall Shields Surrounding the Entire Cable Core

Overall shields shall be terminated to each connector backshell 360 degrees at both ends of a cable, grounded at each terminal distributor, and at any other practicable points. The intent of the 360-degree overall shield is to create a "Faraday cage" around the conductive core to protect it from external electromagnetic radiation and keep its own associated signals and electromagnetic energy inside the cable. At cable junction points where grounding is not feasible, electrical continuity of the overall shields shall be maintained through the junction. See Figure 11 for a diagram of 360-degree shielding using mold adapters when potting and molding in accordance with 3.5.11 of this specification. Molding adapters shall be used for 360-degree overall shield terminations when specified in engineering drawings and documentation. COTS electromagnetic interference (EMI) backshells that employ compression-type fittings shall be used for 360-degree overall shield termination when specified in engineering drawings and documentation.

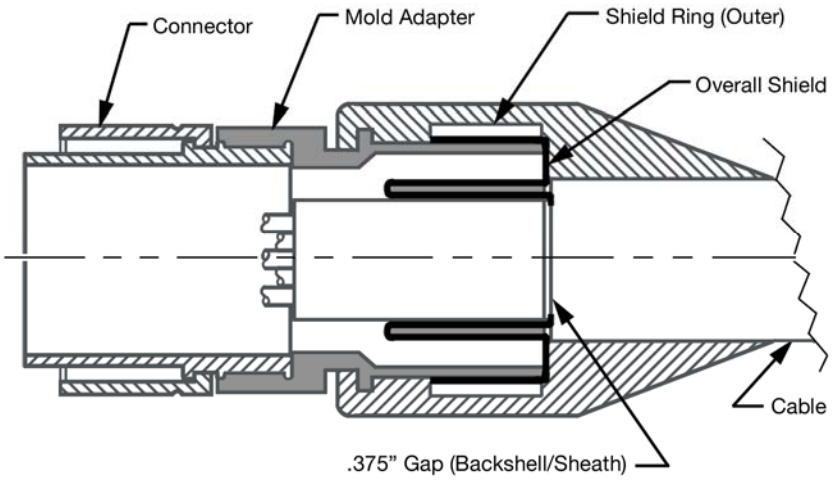

Figure 11. 360-Degree Overall Shield Termination Using a Mold Adapter

3.5.13.3.1 Tinel-Lock Rings

Tinel-Lock rings (shown in Figure 12) shall be used for 360-degree overall shield terminations when specified in engineering drawings and documentation. Tinel-Lock rings are made from a special shape memory metal that shrinks uniformly when heated. Tinel-Lock rings are used to terminate copper cable braid directly onto the rear of a connector backshell adapter. The adapter entry size and ring designator must be selected to suit the cable diameter and braid type. The resulting 360-degree terminations withstand severe shock, vibration, temperature cycling, and corrosion.

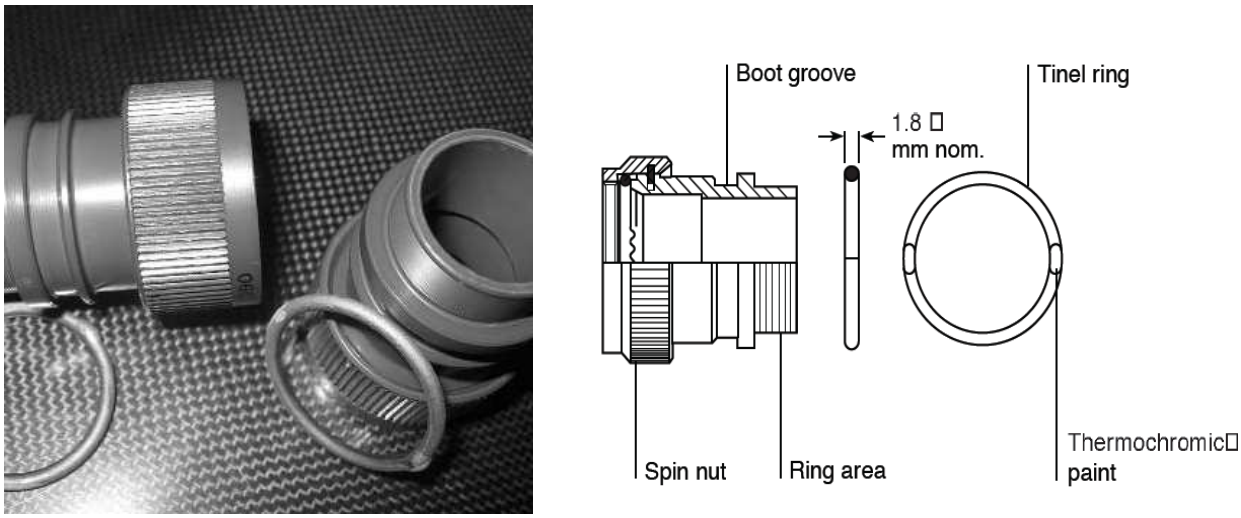

Figure 12. Tinel-Lock Rings and an Example of One Type of Adapter

Tinel rings are installed manually using either a bench or portable, handheld resistance heating tools designed specifically to install Raychem Tinel-Lock ring screened terminations (see Figure 13 and Figure 14). The rings are marked with thermochromic paint, which changes color when the correct temperature for installation is reached. The operator positions the Tinel-Lock on the terminations, with at least one of the patches of thermochromic paint visible. The Tinel-Lock ring is then clamped in the jaws to start the installation. Installation is complete when the thermochromic paint turns black.

This normally takes 3 seconds to 12 seconds, depending on ring size, braid type, etc.

Raychem Tinel-Lock Bench-Style Resistance Heating Tool

Raychem Tinel-Lock Handheld-Style Resistance Heating Tool

Figure 13. Tinel-Lock Ring Resistance Heating Tools

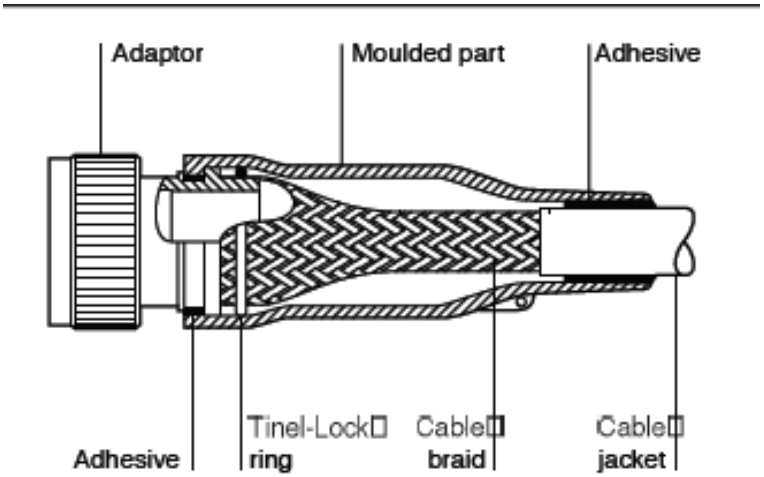

Figure 14. Typical Installation of Tinel-Lock Ring

3.5.13.3.2 EMI/RFI Foil Tape and Wire Mesh

Highly conductive foil tapes and conductive meshes are available in copper, aluminum, or tinned copper and provide an alternative, economical shielding solution for EMI and radio frequency interference (RFI) by providing a low impedance connection between a braided cable shield and the metal connector backshell in molded cables. An effective EMI shielded assembly is achieved without soldering the mesh or tape to the shield braid or backshell by wrapping the tape or mesh around the overall cable shield and connector backshell using an overlap wrapping method. Conductive foil tape or conductive mesh shall be used for 360-degree termination of overall shields to connector backshells when specified in engineering drawings and documentation.

3.5.13.3.3 Interior Cable Runs

When the cable terminates on a terminal strip, the overall shield shall be terminated with a shield terminal and connected to the last terminal point on the terminal strip. A jumper shall be provided between this terminal point and the ground (see Figure 7).

3.5.13.3.4 Exterior Cable Runs

The overall shield shall be immediately terminated to ground at the terminal distributor when the cable run exposes the shield to lightning-induced voltages and currents. On new designs, this shall be accomplished by terminating the shield to a MIL-DTL-22992 connector with a conductive shell and 360-degree shield termination feature. Because many existing cables were not fabricated in this manner, the cable/distributor interface must be grounded as described below (see Figure 8 and Figure 10):

a. When the cable terminates in an exterior-type, heavy-duty (MIL-DTL-22992) connector, enough contacts shall be provided for the overall shield to be terminated on a connector contact. The overall shield shall be terminated with a shield terminal and connected to the last pin or socket in the connector. In the mating terminal distributor harness connector, the wire shall be connected to the last pin or socket and terminated under one of the screws on the connector mounting flange using an internal tooth lock washer in accordance with AIA/NAS NASM35333 under a lug in accordance with SAE AS 25036.

b. When the cable terminates in an interior-type (e.g., MIL-DTL-26482) connector, not enough connector contacts may be available for the overall cable shield to be terminated through the connector insert. If sufficient contacts are available, the shield shall be terminated with a shield terminal and connected to the last connector pin or socket (see Figure 8). If not enough connector contacts are available to permit termination of the overall shield through the connector insert, the overall shield shall be connected to the cable connector shell as shown in Figure 10 (e.g., MIL-DTL-26482-type connectors have conductive shells). When this method of shield termination is employed, the mating harness connector and connector mounting plate must be solidly grounded to the terminal distributor.

c. When the cable terminates on a terminal strip, the overall cable shield shall be terminated directly to the shield ground bus in the terminal distributor cabinet (see Figure 8 through Figure 10).

3.5.13.4 Shield Terminals

Shield terminals shall be in accordance with one of the following or its equivalent:

a. Inner or outer shield rings according to 75M13676 (includes larger sizes necessary to terminate cable overall shields).

b. Two-piece shield termination ferrules qualified under SAE AS 21608-A1, including inner ferrules according to MS21981 and outer ferrules according to SAE AS 18121 and MS21980, and terminated in accordance with 79K04613, as applicable.

c. One-piece ferrules.

d. Solder sleeve shield terminators in accordance with SAE AS 83519A or NASA-approved.

Tools for crimping shield terminals shall be in accordance with 4.3.2 of this specification.

3.6 Terminations

Wire-type terminations shall be in accordance with the following paragraphs. Wire stripping tools and procedures and insulation clearance shall be in accordance with 3.5.7. There shall be no more than three wires per terminal and two wires per lug on a part (see Figure 15).

3.6.1 Compression Type

Compression-type terminals shall be suitable lugs, pressure connectors, or clamps (see Figure 16 and Figure 17) and shall be in accordance with the following paragraphs (see also 3.5.8.3).

Sealing compound, where specified, shall be used after tightening to prevent all types of compression connections from becoming loose as a result of vibration.

3.6.1.1 Captive Nut or Screw Head

Only solid wires may be terminated under screw heads unless the screw head or washer mates into a cupped or formed surface that prevents frayed strands from protruding from the terminal areas. The wire shall be wrapped in a clockwise direction beneath the screw head or between washers under the screw head, with the wire forming an eye on the end.

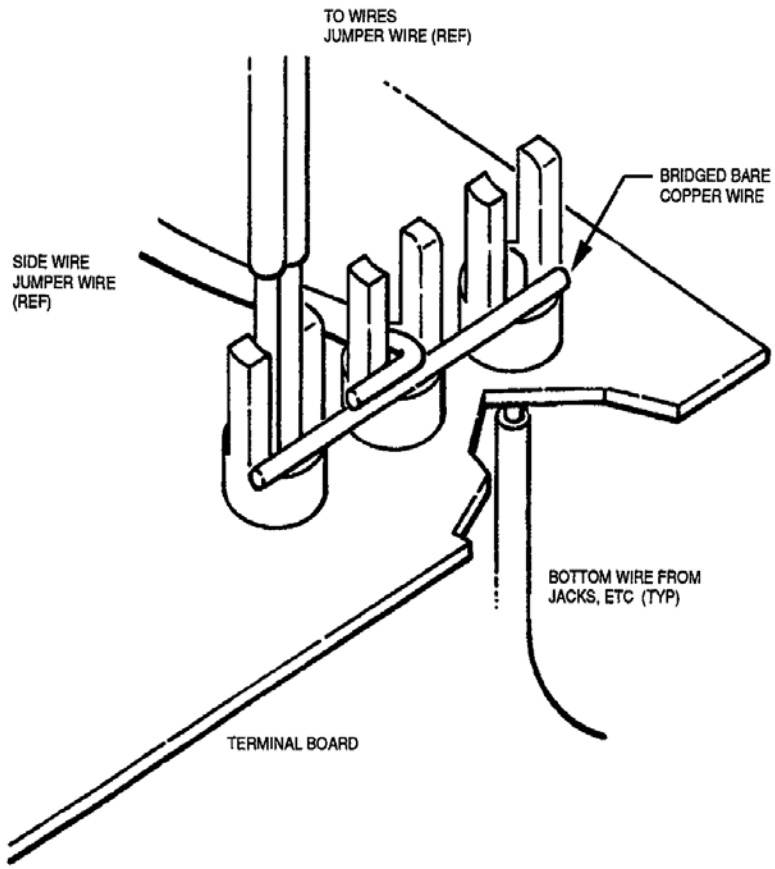

Figure 15. Bridge Bus Terminals

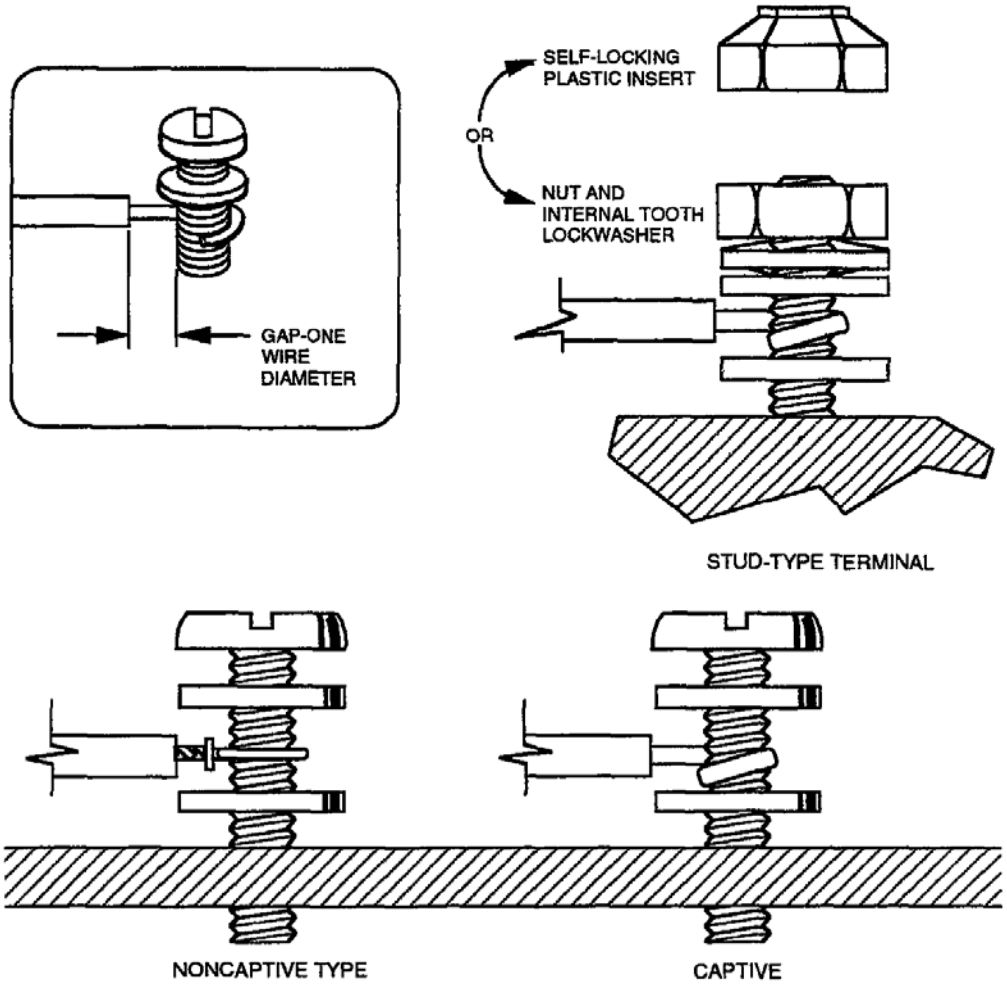

Figure 16. Captive and Noncaptive Nut and Screw Head Terminations

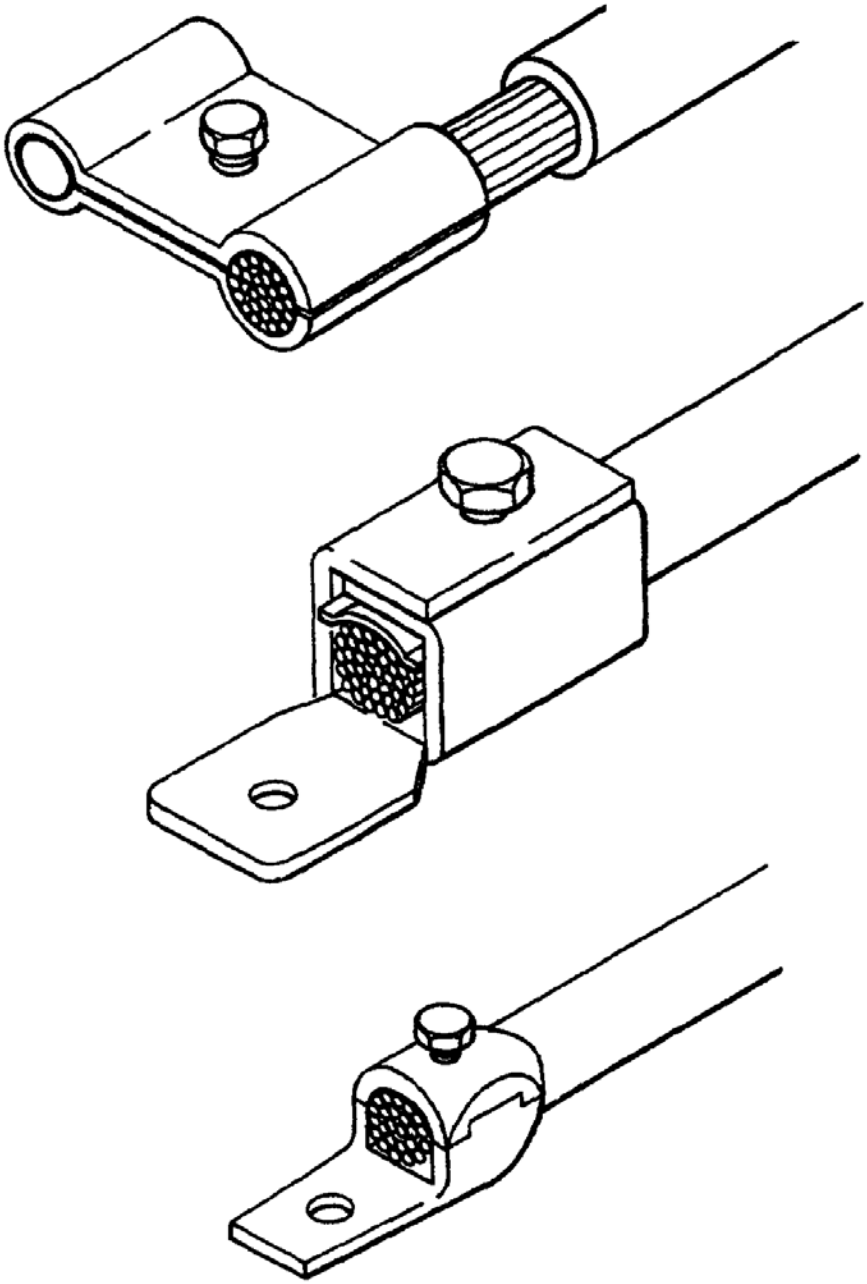

Figure 17. Clamp and Screw End Terminations

A distance equal to one diameter of the conductor shall remain between the end of the wire and the formed loop (see Figure 16). Only one wire may be compressed between any two surfaces of the terminal assembly. Terminal lugs conforming to SAE AS 7928 shall be used in all cases where the nut or screw head is not captive.

3.6.1.2 Clamp or Screw End

Clamp or screw end terminals (see Figure 17) shall be the proper size for the wire. Wire strands shall not be cut off to make it possible to put them into undersized terminals. Terminals shall not be overtightened, which could strip the threads or sever the wire strands.

3.6.2 Crimp Type

Crimp-type terminations shall be in accordance with 79K22638 (which supersedes 75M05668). Shield or coaxial ferrules of the completed termination shall not scratch, mar, compress, or otherwise distort the inner conductor insulation. 82K04459 lists tool, positioner, locator, or turret information for MIL-DTL-5015H, MS27466J, and/or MIL-DTL-38999K connectors; MIL-DTL-22520G provides similar information. A technician shall visually inspect all of the crimps and then perform a nondestructive handpull test to verify that there is a good connection.

3.6.3 Friction Type

Wirewrap tools and procedures shall be in accordance with SAE AMS 2695C.

3.6.4 Solder Type

All solder terminations, as well as component mounting on printed wiring boards, shall be in accordance with the following standards and shall meet the quality assurance requirements established by the standards where applicable.

a. Electrical connections shall be soldered in accordance with NASA-STD-8739.3 when the GSE interfaces directly with a flight item.

b. Electrical connections shall be soldered in accordance with KSC-STD-E-0010 when NASA-STD-8739.3 is not applicable.

NOTE

Connections that depend on solder shall not be used to terminate ground conductors (see 3.6).

3.6.4.1 Hand and Machine Soldering

Soldering tools and procedures shall be in accordance with NASA-STD-8739.3, where applicable, and KSC-STD-E-0010.

3.6.4.2 Soldering Multiple Conductors in a Single Solder Cup

If the conductors are small enough to fit side by side in the solder cup, they shall be stripped and soldered in accordance with the applicable standard. If the conductors do not fit side by side, the solder cup shall not be reamed nor shall conductor strands be removed to decrease the size of the conductor. When the conductors to be soldered do not vary in size by more than four American Wire Gage (AWG) wire sizes, each conductor shall be stripped and the strands combed out. The strands of all conductors shall be twisted together into a single wire and tinned. The resulting conductor shall not be larger than the recommended AWG wire rating of the solder cup.

3.6.5 Bonding and Grounding Type

All bonding and grounding terminations shall be in accordance with KSC-STD-E-0012E and MIL-STD-464.

3.6.6 DIN Rail-Mounted Terminal Blocks

IEC 60715 specifies the requirements and standards for DIN rail mounts. IEC 60947-7-1 specifies the requirements and performance standards for terminal blocks mounted on DIN rails. All DIN rail-mounted assemblies shall comply with IEC 60715 and IEC 60947-7-1. In addition, all DIN rail-mounted terminal blocks shall be compatible with test point adapters or pluggable extension blocks to allow access to test points without disconnecting field wiring.

3.7 Printed Wiring Boards

Fabrication and documentation of printed wiring boards shall be in accordance with IPC 6011, IPC 6012, IPC 2222, IPC 2221, IPC-HDBK-001, and the following paragraphs.

3.7.1 Material

Unless otherwise specified by the applicable engineering drawing, the board material shall be a 1.57 mm (0.062 in)-thick copper-clad laminate.

3.7.2 Construction

3.7.2.1 Circuit Pads

A pad of adequate size shall be provided at each point on a conductor that makes a connection with a component part. The pad size shall be such that, within the extremes of tolerance allowed on hole locations, no abutting portion of the attaching part will protrude beyond the border of the pad area. Terminal pads shall meet the same requirements as conductors for spacing. The component part termination hole should be located on the terminal pad so there is a minimum of 0.38 mm (0.015 in) of copper on all sides of the hole to permit a full 360-degree solder joint. For miniaturization, 0.25 mm (0.010 in) copper on all sides of the hole will be accepted, provided the component lead diameter is no greater than 0.51 mm (0.020 in). Component lead holes shall not be drilled more than 0.38 mm (0.015 in) than the lead diameter.

3.7.2.2 Heat Sinks

The following paragraphs apply for both circuit board and chassis-mounted heat sinks for transistors and semiconductor rectifiers.

3.7.2.2.1 Electrical Insulation

When a heat sink is to be used with a semiconductor, the case and leads of the semiconductor shall be electrically insulated from the heat sink to preclude short-circuiting the power supply or damaging the semiconductor. Although individual heat sinks and duosinks (for maintaining equal case temperatures on transistor pairs) are commercially available with a hard anodized finish for good electrical insulation, this oxide coating can be scratched when the semiconductor is installed into the heat sink. For this reason, high-purity beryllium oxide, mica, or Mylar sleeves and washers shall be used as necessary to insulate the semiconductor leads and case from the heat sink. These materials possess a high thermal conductivity and do not impair the effectiveness of the heat sink.

3.7.2.2.2 Thermal Resistance

Because the contacts between mated surfaces (even when machined smooth) are actually irregular and point to point with tiny air pockets acting as thermal insulators, a thin film of thermally conductive mounting compound shall be applied as necessary to both surfaces before mating to minimize thermal resistance between mating surfaces. Silicone grease (in accordance with SAE AS 8660) is recommended except in vacuum applications where the outgassing from silicone grease might be detrimental.

NOTE

A silicone compound cannot be used in lieu of a conventional solid electrical insulator. It should only be used as filler between the microstructure of mating surfaces.

3.7.2.3 Eyelets and Tubelets

Eyelets and tubelets shall not be used to make electrical connections on printed wiring boards.

3.7.2.4 Workmanship

Soldering and mounting of component parts shall be in accordance with 3.6.4. The completed board shall have a uniform appearance, a smooth and even texture, and shall be free of any contamination, oxide, blisters, and pits. Components shall not be placed across conductor lines without adequately protecting the contact area with insulation (see 3.8). Component parts fabricated with welded leads, such as tantalytic capacitors, require the leads to be straight for a minimum of 0.80 mm (1/32 in) beyond the weld to prevent bending stress from being placed on the welded joint.

3.7.3 Cleaning

After the solder has solidified and cooled, flux and residue shall be carefully removed from each solder connection using a solvent as specified in NASA-STD-8739.3, where applicable, or KSC-STD-E-0010. The solvents are rated according to their potential effect on the materials commonly used in parts, should the solvents penetrate the seals. The user is responsible for determining whether a particular solvent is suitable and for making sure that it will not affect the sleeving or marking on the part.

NOTE

Do not clean printed circuit boards carrying aluminum electrolytic capacitors with Freon, trichloroethylene, carbon tetrachloride, or other chlorine or fluorine solvents. Aluminum electrolytic capacitors are subject to attack by these and other halogenated hydrocarbon solvents. Should these solvents seep into the capacitor through its seal, they will initiate corrosion that will cause the capacitor to fail after a few months. A supplemental epoxy barrier over the end disks or headers will keep these solvents from seeping into the capacitor. Acetone, alcohols, and mineral spirits are acceptable cleaners.

3.7.4 Rejection Criteria

A printed wiring board shall not exhibit the following characteristics:

a. Separation of the conductor pattern from the base laminate of the board

b. Separation of plating through holes or from the conductor pattern

c. Metal, solder, or clinched leads that reduce the minimum spacing between conductors

d. Pits or scratches sufficient to reduce the cross-sectional area of a conductor by more than 20 percent

e. Cold or fractured solder joints or areas where the solder does not adhere to metal

f. Damage to the board or parts caused by burns or heat

g. Damage that makes it difficult to read color codes or labeling of parts on the board

h. Undercutting of the conductor pattern that reduces the line width for the particular conductor by 10 percent or more

3.7.5 Inspection

Printed circuit boards shall be inspected for compliance with the standards listed in 3.6.4, where applicable, and within this section.

3.7.6 Conformal Coating

Unless otherwise specified on the engineering drawing, printed circuit boards shall be given a conformal coating after assembly and test. A single component polyurethane varnish in accordance with QPL-46058-87, Notice 1, type UR, is preferred. The conformal coating shall be applied in accordance with the applicable section(s) of NASA-STD-5005 and with NASA-STD-8739.1. The following coating materials, or their equivalents, shall be used:

a. Type 1A33 (available in aerosol) or

b. Type 1A20 (Humiseal Division, Columbia Chase Corporation, 26-60 Brooklyn-Queens Expressway, P.O. Box 445, Woodside, NY 11377 [CAGE 99109])

3.7.7 Repair

Printed circuit boards shall be repaired in accordance with KSC-STD-E-0010 and as directed by the contract technical representative when repair has been authorized by the contracting officer. IPC 7711/7721 may be used as a guide.

3.7.7.1 Printed Wiring Boards Using Surface-Mount Technology (SMT)

The standard that prescribes NASA's requirements and procedures for hand and machine soldering of surface mount electrical connections is NASA-STD-8739.2. When invoked contractually, it establishes workmanship standards for reliable SMT for flight hardware, mission-critical ground support equipment, and elements thereof. Refer to NASA-STD-8739.2 for standards and requirements for soldering SMT on printed circuit boards (including requirements for equipment, material, parts placement, soldering, cleaning, acceptance/rejection criteria, and rework).

3.8 Sealing and Insulating

3.8.1 Insulation

Equipment shall have adequate dielectric insulation between surfaces of current-carrying parts and those people can touch. Insulated sleeves shall be applied over pins and terminals of relays, connectors, and similar items that are not protected by insulated grommets or by potting. All routed conductors in harness or box assemblies shall be protected at abrasion points. The insulation of wires and cables shall be suitably protected in locations where they are exposed and susceptible to damage.

3.8.1.1 Heat-Reactive Tubing

Heat-reactive tubing shall not be used on components where the application of heat will damage the component.

Heat-reactive tubing for these applications shall be transparent, flexible sleeving in accordance with SAE AMS-DTL-23053. Heat-reactive tubing used for cable jackets shall be in accordance with 3.11.7.1.

The following types are preferred:

a. SAE AMS-I-23053/2, class 2 (polyvinyl chloride, flexible, high temperature, and not crosslinked)

b. SAE AMS-DTL-23053/5, class 2 (polyolefin, thin wall, and crosslinked)

3.8.1.1.1 Application

The procedure for applying heat-reactive tubing shall be as follows:

a. Select tubing where the expanded size is larger than the object to be covered and the recovered size is smaller (see Figure 18, view B).

b. Place the tubing over the object to be covered.

c. Briefly expose the tubing to heat by using a portable hot-air gun or other approved method. The degree of heat and the exposure time will depend on the size and type of tubing.

CAUTION

Extreme care shall be exercised to ensure that the degree of heat used is not detrimental to the object being covered.

d. The tubing quickly shrinks to a predetermined inside diameter and provides a griptight mechanical bond (see Figure 18, view C). The longitudinal shrinkage normally will be less than 10 percent.

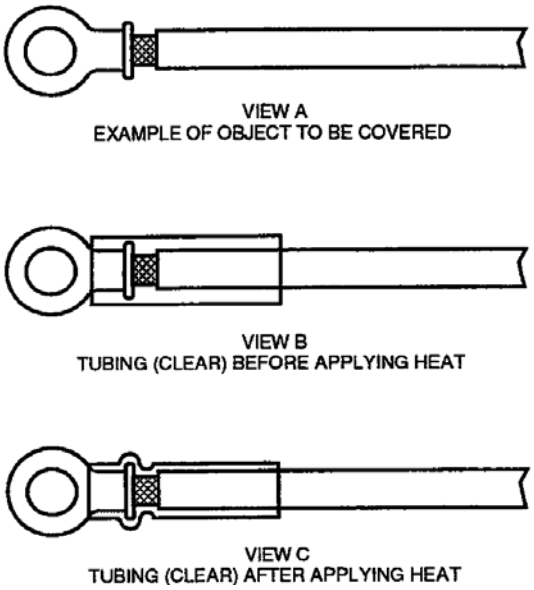

Figure 18. Application of Heat-Reactive Tubing

3.8.1.1.2 Visual Inspection

All objects covered with the tubing shall be visually inspected for shrinkage and bonding of the tubing.

3.8.1.2 Insulation Tubing

In accordance with SAE AMS-I-7444, insulation tubing shall be flexible polyvinyl chloride sleeving for applications where heat-reactive tubing is inappropriate. The tubing shall extend a distance equal to or greater than the tubing diameter above the stripped portion of the attached conductor. Lacing twine, in accordance with 3.5.9.1, shall be tied over the sleeving as necessary to prevent sliding.

3.8.2 Sealing Compound, Electrical

A sealing compound in accordance with SAE AS 8660 shall be used where affected parts are not sealed hermetically, are not protected by potting or molding compounds, or have possible corrosion or heat loss problems. The sealing compound is used for the following reasons:

a. As a corrosion inhibitor on mating surfaces or connections where corrosion can result from galvanic action of dissimilar metals or exposure to corrosive liquids and/or vapors (e.g., battery terminals, bonding terminals, friction, and compression terminals)

b. As a heat transfer abettor on mating surfaces or joints where heat-transfer loss can result from corrosion, voids, or noncontacting areas (e.g., semiconductors or resistors that use insulating or noninsulating hardware on heat sinks)

The compound shall be liberally applied to parts before mating or joining to fill the voids between the parts and seal the openings to the exterior of the joining area. This will prevent invasion of corrosives. The electrical contact resistance of a completed bond shall be no greater than an identical joint made without the compound. On insulating surfaces, the electrical insulating resistance shall be no less than the minimum allowable resistance for an identical joint without the compound.

3.9 Hazardproofing

For the purposes of this specification, hazardproofing means preventing ignition of hazardous fluids (liquids and gases) by electrically energized equipment. Hazardproofing at KSC shall be in accordance with KSC-STD-E-0002 and applicable sections of NASA-STD-5005.

Design for all new electrical equipment to be used in hazardous (classified) locations shall comply with the intent of the applicable guidelines of NFPA 70 (latest released edition), NFPA 430 (latest released edition), and NFPA 497 (current version at start of project unless otherwise stated in project documentation).

The lead design engineer shall coordinate the design and implementation of hazardproofing for electrically energized equipment with the NASA Fire and Rescue Office, the authority having jurisdiction (AHJ) over activities at KSC.

3.9.1 Intrinsically Safe Equipment

NEC-type (Underwriters Laboratories approved) equipment designed for use in hazardous atmospheres (without purge) shall be used when commercially available and shall be in accordance with NFPA 70 (Section 500.4) as required by the procuring activity.

3.9.2 Ignitionproofing

An enclosure that excludes ignitable atmospheres shall be considered to be ignitionproof.

3.9.2.1 Small Junction Boxes

Small junction boxes shall be made ignitionproof by encapsulation with a nonacetic acid, two-part room-temperature vulcanizing (RTV) compound.

3.9.2.2 Electrical Components

Limit switches, position indicators, valves, etc., shall be made ignitionproof if all voids within the enclosures are encapsulated with suitable compounds.

3.9.2.3 Electrical Connectors and Mated Cables

Connectors in accordance with MIL-DTL-5015, MIL-DTL-22992, and MIL-DTL-38999 and cables built in accordance with 3.11 shall be ignitionproofed as follows:

a. Lubricate the rear threads with Molykote X-15, KEL-F-90, or an equivalent.

b. Torque the rear coupling nut to the values given in table I of 79K19600 with the O-rings in place.

c. Before mating, coat the front threads with one of the lubricants listed above.

Bayonet-coupled connectors, in accordance with MIL-DTL-26482H, are not recommended for hazardous locations. But if an interfacing component connector dictates that a bayonet-coupled connector be used, it shall be ignitionproofed by coating the entire mated plug and receptacle with a nonacetic acid RTV compound.

3.9.3 Purging and Pressurization

A hazardproofing purge is used to exclude combustible atmospheres from electrical enclosures that do not meet NFPA 70 requirements for use in such atmospheres. Once the enclosure has been purged, only positive pressure shall be required to be maintained within the enclosure. Purging for environmental protection alone shall not be employed if adequate protection can be achieved by a simpler means (see 3.10.3).

All purging and pressurization shall be accomplished in accordance with KSC-STD-E-0002D and the following paragraphs.

3.9.3.1 Equipment

The equipment chosen shall meet the following criteria:

a. New equipment enclosures shall be in accordance with NFPA 496 and shall withstand a gage pressure of 500 pascals (Pa) (2 inches of water) without leakage and without damage to the enclosure.

b. Doors and/or removable access panels shall be of a design suitable for frequent opening and closing and shall be leaktight when closed.

c. A humidity indicator that changes color to indicate changes in humidity shall be installed to indicate when the relative humidity in the enclosure exceeds 30 percent (when required by the procuring activity).

d. A pressure monitoring assembly shall be installed in accordance with NFPA 496 when required by the procuring activity's technical representative.

e. The purge inlet assembly shall be in accordance with 79K07491-3. The purge outlet assembly shall be in accordance with 79K07491-4 (where clearance is not restricted) and with 75M02047 (where clearance is restricted).

3.9.3.2 Purge Pressure

Enclosures shall be maintained so that they are sufficiently leaktight to prevent the purge pressure from dropping below a positive pressure of 25 Pa (0.1 in of water) during a flowing purge.

3.9.3.3 Flow Rate

Purging equipment shall be designed to maintain a flow rate of 0.2 liters per second (L/s) to 0.5 L/s (0.5 cubic foot per minute [ft^3/min] to 1.0 ft^3/min) of purge medium through the enclosure (to the atmosphere) under standard conditions.

3.9.3.4 Purge Media

The purge medium shall be one of the following:

a. Compressed dry air

b. Gaseous nitrogen in accordance with SE-S-0073

If compressed air is used, the dewpoint shall not exceed –12.2 °C (10 °F), the oil content shall not exceed 3 parts per million by mass, and the particulate filtration shall be 20 µm absolute.

3.10 Corrosion Control

Electrochemical corrosion is the primary type of corrosion at KSC. Four conditions must exist before electrochemical corrosion can proceed: (1) there must be something that corrodes (the metal anode), (2) there must be a cathode, (3) there must be a continuous conductive liquid path (electrolyte, usually condensate and salt or other contaminants), and (4) there must be a conductor to carry the flow of electrons from the anode to the cathode. This conductor is usually in the form of an item that makes metal-to-metal contact such as a bolted or riveted joint.

Eliminating any one of the four conditions will stop corrosion (e.g., an unbroken coating on the surface of the metal will prevent the electrolyte from making contact with the cathode and anode and the current cannot flow; therefore, no corrosion will occur as long as the coating is unbroken).

In Table 9, metals are grouped by their potential tendency for galvanic corrosion. Refer to TM-584 for a detailed discussion on the types and causes of corrosion and how corrosion can be prevented and removed.

3.10.1 Corrosion-Resistant Materials

Corrosion-resistant materials shall be used, including plastics where possible. Galvanized supports shall be specified for outside installations and for inside installations where corrosive agents are present. Fiberglass junction boxes and enclosures shall be used where feasible (see 3.1).

Table 9. Potential Tendency for Galvanic Corrosion

Anode–Corroded End (Less Noble) → Cathode–Protected End (Noble)

CATEGORY		1	1	2	3	3	3	4	5	5	6	7	8	8	9	10	10	11	11	11	12	13	14	15	15	15	16	17	18	18	19	20	20
CATEGORY	METAL OR ALLOY	Magnesium	Magnesium Alloy	Zinc	Clad 70 Al	Clad 7075 Al	Clad 6061 Al	Clad 2024 Al	3003 Al	6061-T6 Al	Cadmium	2024-T4 Al	Steel or Iron	Cast Iron	Chromium Iron (Active)	304 SS (Active)	316 SS (Active)	Lead-Tin Solders	Lead	Tin	Nickel (Active)	Hastelloy C (Active)	Hastelloy A (Active)	Brasses	Copper	Bronzes	Silver Solder	Nickel (Passive)	304 SS (Passive)	316 SS (Passive)	Silver	Graphite	Platinum
1	Magnesium	0	0	1	2	2	2	3	4	4	5	6	7	7	8	9	9	10	10	10	11	12	13	14	14	14	15	16	17	17	18	19	19
1	Magnesium Alloy		0	1	2	2	2	3	4	4	5	6	7	7	8	9	9	10	10	10	11	12	13	14	14	14	15	16	17	17	18	19	19
2	Zinc			0	1	1	1	2	3	3	4	5	6	6	7	8	8	9	9	9	10	11	12	13	13	13	14	15	16	16	17	18	18
3	Clad 70 Al				0	0	0	1	2	2	3	4	5	5	6	7	7	8	8	8	9	10	11	12	12	12	13	14	15	15	16	17	17
3	Clad 7075 Al					0	0	1	2	2	3	4	5	5	6	7	7	8	8	8	9	10	11	12	12	12	13	14	15	15	16	17	17
3	Clad 6061 Al						0	1	2	2	3	4	5	5	6	7	7	8	8	8	9	10	11	12	12	12	13	14	15	15	16	17	17
4	Clad 2024 Al							0	1	1	2	3	4	4	5	6	6	7	7	7	8	9	10	11	11	11	12	13	14	14	15	16	16
5	3003 Al								0	0	1	2	3	3	4	5	5	6	6	6	7	8	9	10	10	10	11	12	13	13	14	15	15
5	6061-T6 Al									0	1	2	3	3	4	5	5	6	6	6	7	8	9	10	10	10	11	12	13	13	14	15	15
6	Cadmium										0	1	2	2	3	4	4	5	5	5	6	7	8	9	9	9	10	11	12	12	13	14	14
7	2024-T4 Al											0	1	1	2	3	3	4	4	4	5	6	7	8	8	8	9	10	11	11	12	13	13
8	Steel or Iron												0	0	1	2	2	3	3	3	4	5	6	7	7	7	8	9	10	10	11	12	12
8	Cast Iron													0	1	2	2	3	3	3	4	5	6	7	7	7	8	9	10	10	11	12	12
9	Chromium Iron (Active)														0	1	1	2	2	2	3	4	5	6	6	6	7	8	9	9	10	11	11
10	304 SS (Active)															0	0	1	1	1	2	3	4	5	5	5	6	7	8	8	9	10	10
10	316 SS (Active)																0	1	1	1	2	3	4	5	5	5	6	7	8	8	9	10	10
11	Lead-Tin Solders																	0	0	0	1	2	3	4	4	4	5	6	7	7	8	9	9
11	Lead																		0	0	1	2	3	4	4	4	5	6	7	7	8	9	9
11	Tin																			0	1	2	3	4	4	4	5	6	7	7	8	9	9
12	Nickel (Active)																				0	1	2	3	3	3	4	5	6	6	7	8	8
13	Hastelloy C (Active)																					0	1	2	2	2	3	4	5	5	6	7	7
14	Hastelloy A (Active)																						0	1	1	1	2	3	4	4	5	6	6
15	Brasses																							0	0	0	1	2	3	3	4	5	5
15	Copper																								0	0	1	2	3	3	4	5	5
15	Bronzes																									0	1	2	3	3	4	5	5
16	Silver Solder																										0	1	2	2	3	4	4
17	Nickel (Passive)																											0	1	1	2	3	3
18	304 SS (Passive)																												0	0	1	2	2
18	316 SS (Passive)																													0	1	2	2
19	Silver																														0	1	1
20	Graphite																															0	0
20	Platinum																																0

Anode–Corroded End (Less Noble) ↓ Cathode–Protected End (Noble)

Note Numbers are qualitative only, the larger the number, the greater the tendency for galvanic corrosion

3.10.2 Dissimilar Metals

Use of dissimilar metal couples shall be avoided. MIL-STD-889B, Notice 1, shall be used in determining the tendency for galvanic action between a combination of metals or alloys. When dissimilar metals are in direct contact, the more anodic material corrodes at an accelerated rate. Metals placed in contact during fabrication and assembly of GSE shall come from the same or an adjacent grouping. When it is not possible to separate items in different groups, the more easily replaceable items (handles, fasteners, etc.) shall be selected from the more active group. The following guidelines shall be used to minimize corrosion caused by the use of dissimilar metals:

a. When dissimilar metals must come into contact, they shall be separated by using nonconductive barrier materials (such as nylon washers or barrier tape in accordance with A-A-59298A) or with a protective coating or plating (see 3.10.4).

b. The anode shall be as large as feasible in relation to the cathode. When the anode is large with respect to the cathode, two advantages are realized. First, because the anode is being dissolved by the electrolyte, uniform corrosion takes place over a relatively large area at a relatively slower rate, thus increasing the service life of the anode. Second, the small cathode areas tend to become polarized by hydrogen gas or polarized by alkali or insoluble salts, thereby slowing or stopping the reaction.

c. Both the anode and the cathode shall be coated with the same material.

d. When possible, fasteners dipped in zinc chromate primer shall be installed.

e. The use of lock or toothed washers over plated or anodized surfaces shall be avoided (they break the protective coating) unless they are used to ensure a good electrical bond connection.

f. Only dry-film lubricants that are graphite-free shall be used (MIL-PRF-46010F restricts the use of graphic as a material in the coating).

3.10.3 Moisture Exclusion

Moisture shall be excluded from equipment enclosures by providing seals (see 3.8.2) or coatings (see 3.10.4), dehumidification (desiccants), vapor phase inhibitors, purges (see 3.9.3), or air conditioning or maintaining the temperature above the dewpoint (strip heaters). Equipment shall not be purged for environmental protection alone if there is another way to provide adequate protection.

3.10.4 Protective Coatings

Surfaces shall be protected with metallic, inorganic, or organic coatings as required (see 3.1, 3.7.6, and 3.8).

3.10.5 Lubricants

Exposed bearing surfaces shall be protected with corrosion-inhibiting lubricants (see 3.3.1.6).

3.11 General-Purpose Cables

Cable and harness fabrication and assembly shall be in accordance with 79K07416, 120E3100003, GP-864, and applicable design drawings. 79K19600 may be used for legacy systems but is not recommended for new designs.

3.11.1 Standard Bulk Cable

Cable shall be in accordance with 120E3100001, 120E3100002, GP-864, MIL-DTL-17H, 82K03878, or the applicable design drawings. KSC-SPEC-E-0031 may be used for legacy systems but is not recommended for new designs.

Bulk cables shall be inspected for conformance to specifications prior to fabrication.

3.11.2 Unique Bulk Cable

3.11.2.1 Preferred Types

The heat-shrinkable tubing used for cable jackets shall be black, flexible sleeving in accordance with SAE AMS-DTL-23053. The following types are preferred.

a. SAE AMS-DTL-23053/1, class 1 or 2 (polychloroprene and flexible)

b. SAE AMS-DTL-23053/5, class 1 or 3 (polyolefin, thin wall, flexible, and crosslinked)

c. SAE AMS-DTL-23053/15 (polyolefin, thick wall, coated, and crosslinked)

3.11.2.2 Fabrication Procedure

Small lengths of unique conductor-grouping bulk cable shall be fabricated according to the following procedure:

a. Select a shield whose diameter is larger than the outside diameter of the wire bundle. The length of the shield should be specified about 10 percent longer than the cable length to allow for possible shortening of the shield that can result from braid expansion if the outside diameter has been slightly miscalculated.

b. Use a cable jacket with a recovered diameter slightly smaller than the calculated overall diameter of the conductor bundle with the overall shield applied. The length specified should be 10 percent greater than the cable length to allow for shrinkage that can result from heating.

c. Cut the conductor sets 1.15 times the required cable length to compensate for a shortening of the length that can result from twisting and end damage.

d. For short cables (4,500 mm [15 ft] or less), hand-twisting of the multiple conductor bundle shall be accomplished without tangling. The lay shall be unidirectional right-hand with a length of 8 to 16 times the outside diameter of the multiple. The individual conductors or the conductor sets shall be relieved as the multiple is twisted so the sets will not be twisted. For cables over 4,500 mm, a simple fixture can be made that prevents tangling and gives a uniform twist (as shown in Figure 19).

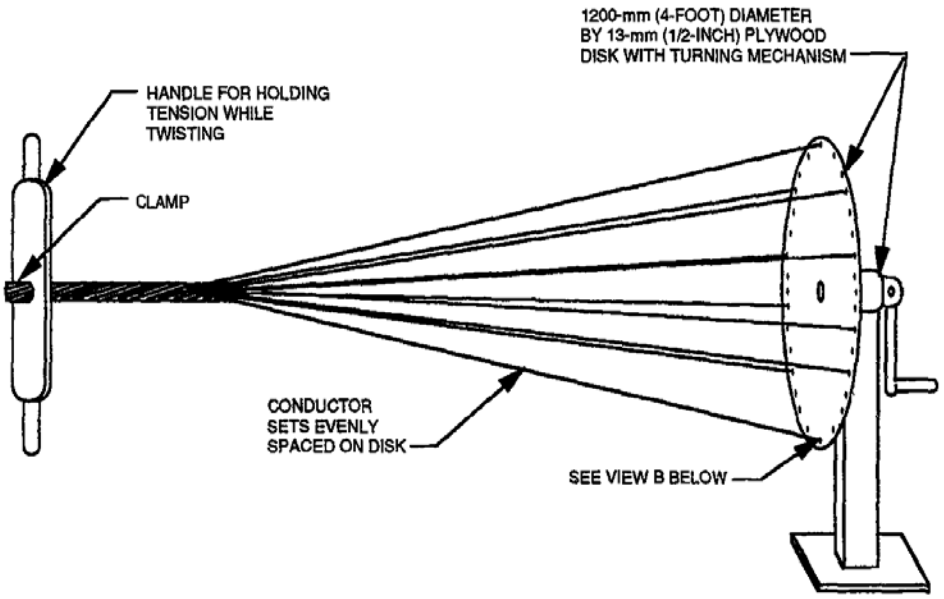

VIEW A

TWISTING CABLE WITH THE AID OF PLYWOOD DISK AND TURNING MECHANISM

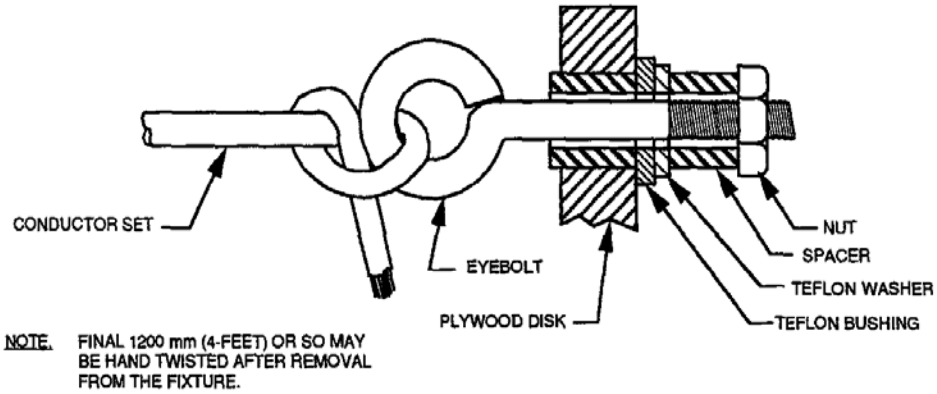

VIEW B

ANTI-TWIST BEARING DETAIL (36 REQUIRED SPACED AT 10-DEGREE INTERVALS)

Figure 19. Unique Bulk Cable Fabrication

e. Cut the overall braided shield to the dash-number length plus about 10 percent. Lay the braided shield out straight on the floor or long workbench and run a fish tape through the length of the shield. Secure the end of the fish tape to one end of the conductor multiple and pull the multiple through the shield. Personnel should be stationed along the shield to stroke the shield as the multiple goes through. When finished, the shield should be stroked from the center outward in both directions to form the shield tightly around the multiple.

f. Cut the polychloroprene or other approved jacket material to the dash-number length plus about 10 percent. Lay the jacket out straight on the floor or long workbench and run the fish tape through the length of the tubing. Secure the end of the fish tape to one end of the multiple and overall shield. (If the fish tape is still secured to the multiple, the tape can be wrapped around the shield at the secured end to prevent it from slipping back.) Then pull the cable through the sleeve with personnel stationed along the jacket to ensure the shield does not bind or catch in the jacket.

g. The heat-shrinking process may be done in a number of ways (heat gun with wraparound shield, cylindrical open-ended over, etc.); but, whichever method is used, the heat should be applied evenly around the circumference of the cable and should progress slowly from one end to the other or from the center to each end in turn, making sure the tubing is completely shrunken as the process moves along the cable. A slight back-and-forth motion with a heat gun is sometimes desirable to start the process downstream to prevent wrinkles and distortion due to abrupt shrinking at one point.

h. Cut off one end of the cable as close as possible to any damaged conductors or shield or tubing ends. Measure the cable and add 150 mm to 300 mm (6 in to 12 in) to the dash-number length. Cut the cable at this point; the cable is now ready for termination.

3.11.3 Connectors

MIL-DTL-5015, MIL-C-22992, MIL-DTL-38999, and MIL-DTL-26482 connectors shall be 100-percent inspected in accordance with 75M13302 before they are mated or used in Space Shuttle and/or Constellation GSE flight interface equipment, cables, or harnesses. Installed connectors shall be inspected for damage, clocking, contact alignment, and spacing in accordance with 75M13302 before and after potting and molding operations and just prior to final acceptance. Connector substitutions shall be in accordance with 120E3100003 or GP-864. 79K19600 may be used for legacy systems but is not recommended for new designs. All other connectors shall be visually inspected for damage, proper clocking, and contact alignment and spacing.

3.11.3.1 D-Subminiature (DB) Connectors

MIL-DTL-24308F (nonenvironmental), MIL-DTL-83513F (polarized shell), and MIL-DTL-55302F (printed circuit subassembly) DB connectors shall be 100-percent inspected and tested in accordance with MIL-STD-202G and ECA EIA-364-E before they are mated or used in Space Shuttle or Constellation GSE flight interface equipment, cables, or harnesses. Installed connectors shall be visually inspected again for damage, clocking, contact alignment, and spacing prior to connector mates.

DB connectors are used in many computer, audio/video, and data applications. The official name is D-subminiature, but many people call them "D-sub" or just "DB." The connectors get their name from their trapezoidal shape that resembles the letter "D." Most DB connectors have two rows of pins. Common types of D-sub connectors are DB9 and DB25 (Figure 20), used on personal computers (PCs) for serial and parallel ports. DB connectors use thumbscrews to secure the connectors.

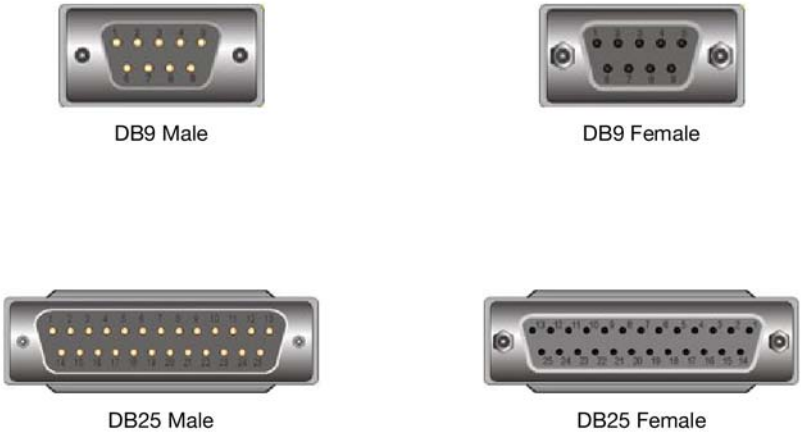

Figure 20. DB9 and DB25 Connectors

High-density (HD) DB-style connectors (Figure 21) look just like regular DB connectors; however, HD DB connectors have pins that are slightly smaller and placed closer together. HD connectors often have three rows of pins instead of two. The most common HD connector is the HD15, which is found on PC video cards and monitors. HD connectors use thumbscrews to secure the connectors.

Figure 21. DB15 Connectors

Another type of DB or D-sub connector is the MD, or micro DB connector (Figure 22). Micro DB connectors are slimmer than standard D-subs, with pins even smaller than the ones used on HD connectors. The MD is also commonly called a “half-pitch” DB connector. MD connectors are often used in Small Computer System Interface (SCSI) applications, and the most popular types are the MD50 and MD68 connections. MD connectors can use latch clips or thumbscrews as anchoring mechanisms.

Figure 22. MD50 and MD68 Connectors

D-sub connectors are usually described by the total number of pins that they can hold. In some cases, a DB25 connector may only have four or five pins loaded into it; however, it is still called a “DB25” connector and not a “DB4” or “DB5.” Another example is the HD15 connector used by monitors—most monitor cables are only loaded with 14 pins, but the connector is still called an HD15 connector.

3.11.4 Jacket Removal

The removal of outer jackets of insulation, when required, shall be accomplished by a method that will prevent damage to metallic shields or individual conductor insulation. Insulation shall have a neat, unfrayed appearance.

3.11.5 Conductor and Shield Termination

Conductor terminations shall be as specified in 3.6. Conductors within each individual shielded group shall be terminated in accordance with wiring diagrams on a row-by-row basis. Shield terminations for cables and cable harnesses shall be in accordance with 79K04613, 79K07416, 82K03874, paragraph 3.5.13 of this specification, and applicable engineering drawings and documentation. The shield termination hardware shall be in accordance with 3.5.13.4.

3.11.6 Potting and Molding

Prior to potting or molding, the cable assembly shall be checked for workmanship and for electrical continuity and leakage between circuits as specified in 3.11.10. Unless otherwise specified, potting, molding, and inspection of electrical connectors and cables shall be in accordance with KSC-STD-132. Potting and molding operations shall be performed in accordance with applicable portions of 79K14177 and as specified in engineering drawings and documentation. Before potting, backshells shall be torqued to values specified in 120E3100003 (79K19600 may be used for legacy systems but is not recommended for new designs).

3.11.7 Cable Jacket Repair

Damage to the cable sheath shall be repaired without affecting the serviceability of the cable when the overall shield braid and the conductors underneath have not been harmed. When the integrity of the overall shield or conductor core is lost, the cable shall be replaced or spliced (see 3.11.8).

3.11.7.1 Sleeves

The cable repair material shall consist of a heat-shrinkable sleeve coated on the inside with an adhesive that will melt and flow as the sleeve shrinks and will provide an environmentally sealed and electrically insulated connection. SAE AMS-DLT-23053 establishes the requirements for electrical insulating sleeving that will shrink to a predetermined size when heat is applied. A wraparound sleeve shall be used to repair the cable in place or when a tubular sleeve cannot be fitted.

The damaged area shall be cleaned and abraded to remove dirt and improve adhesion; then the repair sleeve shall be installed according to the manufacturer's instructions.

3.11.7.2 Approved Products

The following products, or their equivalents, are approved for use:

a. **Heavy-wall cable sleeve:** Tyco Electronics (formerly known as Raychem) type WCS, type WCSM, or SST-FR (Tyco Electronics, 8000 Purfoy Rd., Fuquay-Varina, NC 27526 [CAGE 06090])

b. **Light-wall cable sleeve:** Tyco Electronics (formerly known as Raychem) type TCS, TCS2, or STW (Tyco Electronics, 8000 Purfoy Rd., Fuquay-Varina, NC 27526 [CAGE 06090])

c. **Wraparound cable sleeve:** Tyco Electronics (formerly known as Raychem) type MRS (Tyco Electronics, 8000 Purfoy Rd., Fuquay-Varina, NC 27526 [CAGE 06090])

3.11.8 Splicing

Cables shall only be spliced with the approval of the contracting officer.

3.11.8.1 Procedure

Cable splicing shall be accomplished as follows:

a. Strip the cable insulation to the required length, being careful to maintain the integrity of the overall shield. For multiconductor cables, plan the entire procedure so the splice sleeves will be staggered to reduce the diameter of the completed splice as much as possible.

b. Slip the cable repair sleeve, in accordance with 3.11.7, over one cable end. The cable sleeve shall be sized to slip over the completed splice bundle and overlap the cable ends by a minimum of 150 mm (6 in).

c. Place the shield braid and shield braid terminators over the cable ends if required by step g.

d. Select the properly sized splice sleeve (see 3.5.12) for the conductor to be spliced. Splices made in accordance with NAS 1744 and MIL-S-81824 are preferred when environmental sealing and size considerations are important. Crimped splices are preferred over soldered splices when there is enough space to use crimping tools.

e. Strip the conductor insulation for one-half the length of the splicing sleeve in accordance with 3.5.7.

f. Install the splicing sleeve on the conductor using the approved tooling (see 4.3.2). Repeat the above steps for all conductors when required. Stagger the splices on a multiconductor cable to reduce the diameter of the bundle.

g. Terminate the shield braid according to one of the following methods:

(1) For a cable with an (unspliced) wire bundle diameter less than 30 mm (1.2 in), use a shield braid terminator (SAE AS-83519A-A1 or NASA-approved). Before beginning the splicing operation, slide a properly sized shield terminator over each of the cable ends to be spliced. Then slide a section of tubular shield braid in accordance with A-A-59569B over one cable end, which is sized to fit over the completed splice bundle, and overlap the shield braid on the cable ends. After the conductor splices have been completed and inspected, slide the shield over the splices and terminate it to the original shielding according to the manufacturer's instructions. This is the preferred method for use in confined areas where it is difficult to operate the tooling.

(2) For a cable with an (unspliced) wire bundle diameter of 38 mm (1.5 in) or less, connect the shield braids using shield rings in accordance with 75M13676 or wing shield terminators (SAE AS-83519A-A1 or NASA-approved). Prior to splicing, slide the shield rings and braid over the cable ends. When the splicing operation is complete, slide the new section of the shield braid over the splice and crimp it to the old braid using the shield rings.

(3) For larger diameter cables where shield rings and/or shield terminators are not available, bridge the gap with open-weave shielding braid tape, Scotch no. 23, or equal. Install one half-lapped layer of the tape across the splice bundle, making sure it laps at least 25 mm (1 in) over the cable shield at each end. Tack-solder each end to hold them in place. Wick as much solder at the juncture as possible, being careful not to melt the conductor insulation underneath. Shield rings and/or shield terminators shall be used when available.

h. Test the cable and verify compliance with 3.11.10.

i. Clean and abrade the outer cable jackets to remove foreign substances and ensure a proper bond. Position the cable sleeve across the splice bundle and shrink the sleeve to fit. A bead of sealant will be visible around the edge of the sleeve after shrinking when a proper seal has been made.

3.11.8.2 Approved Products

The following products, or an equivalent, are approved for use:

a. Shield terminators in accordance with SAE AS 83519A-A1 and/or NASA-approved methods

b. Tyco Electronics (formerly known as Raychem) shield braid terminators, series D-123 (Tyco Electronics, 8000 Purfoy Rd., Fuquay-Varina, NC 27526 [CAGE 06090])

c. Scotch no. 24 electrical shielding tape (Electrical Specialties Division/3M, 225-4N 3M Center, St. Paul, MN 55144 [CAGE 20999])

3.11.9 Thermal Protection

The following methods shall be used to provide thermal protection for cabling as specified by the applicable installation or engineering drawing. When the application of the tape requires the removal of cable identification labels, the labels shall be reinstalled in a highly visible and permanent manner using 6.5 mm (0.25 in) characters.

3.11.9.1 Application

Thermal protection application shall be accomplished as follows:

a. **Method 1:** Apply a half-lapped layer of 50 mm (2 in)-wide heat-reflective, metallized glass-cloth tape.

b. **Method 2:** Apply a base layer of half-lapped, 50 mm (2 in)-wide thermal-barrier tape. Cover with one layer of heat-reflective tape according to method 1.

c. **Method 3:** Apply a base of two half-lapped layers of 50 mm (2 in)-wide thermal-barrier tape. Cover with one layer of heat-reflective tape according to method 1.

d. **Method 4:** Apply a base of two half-lapped layers of 50 mm (2 in)-wide thermal-barrier tape. Cover with two layers of half-lapped 50 mm-wide heat-reflective, metallized glass-cloth tape according to method 1.

NOTE

When more than one layer of tape is used, each successive layer shall be wrapped in the direction opposite of the preceding layer.

3.11.9.2 Approved Products

The following products, or their equivalents, are approved for use:

a. High-temperature, metallized glass-cloth tape: Scotch type 363 (Industrial Tape and Specialties Division/3M, 3M Center, St. Paul, MN 55144 [CAGE 52132])

b. Thermal-barrier tape: Scotch type AZ 1367 (Industrial Tape and Specialties Division/3M, 3M Center, St. Paul, MN 55144 [CAGE 52132])

c. Panduit stainless steel tie MLTxH-LP (x = bundle diameter in inches) requires GS4MT installation tool and PME acid etching pen or IMP 250 indenter marker (Panduit Corporation, 17301 Ridgeland Street, Tinley Park, IL 60477 [CAGE 06383])

3.11.10 Cable Checkout

Insulation resistance and continuity tests shall be performed by the fabricating agency on all cable assemblies. Cable assemblies, as defined herein, consist of cables with prefabricated terminations on one or both ends and less than 60 m (200 ft) in length. For assemblies longer than 60 m, refer to the cable assembly drawing or make a request to the contracting officer for minimum limits of cable insulation resistance. Prior to tests, all wiring shall be inspected to verify proper workmanship and positioning for adequate clearances and stress relief. The fabricating agency shall forward the recorder strips obtained in accordance with 3.11.10.3 and shall certify that every cable assembly meets or exceeds all requirements specified in 3.11.10.1 through 3.11.10.3.3.2.

3.11.10.1 Cable Continuity Test

For multiconductor cable assemblies, all multiconductor assemblies shall be tested as follows:

a. A multimeter or measuring device approved by the contracting officer or designated NASA technical representative shall be used. The meter shall be set at the lowest ohm scale applicable to the readings.

b. Each conductor shall be tested.

c. Each conductor of an assembly shall be tested for minimum resistance based on the length and type of cable.

3.11.10.2 Cable Insulation-Resistance Tests

For multiconductor cable, the insulation resistance shall be measured between isolated circuits and ground on all circuits not involving electrical components.

a. **Measuring Instrument:** The resistance measurements shall be taken with an approved insulation-resistance instrument that has a test potential of 500 volts direct current (VDC). The instrument shall have a full-scale reading of 2,000 megohms (MΩ) or greater, with a minimum accuracy of 5 percent at 100 MΩ. The potential shall be applied long enough for the meter to become reasonably stable and an accurate measurement to be taken.

b. **Minimum Resistance:** Minimum resistance of new cables shall be as follows:

(1) Each shield to ground: 100 MΩ

(2) Each shield to shell of connector or receptacle (when shield is not terminated to the backshell): 100 MΩ

(3) Each conductor or all conductors to any single corresponding shield: 100 MΩ

(4) Each conductor or all conductors to any single conductor: 200 MΩ

(5) Each conductor or all conductors to ground: 100 MΩ

(6) Each insulated shield to shield: 100 MΩ

(7) Overall shields to ground shell of conductor (when shield is not terminated to the backshell), other shields if applicable, or conductors: 100 MΩ

Insulation resistance may become lower with service life. Acceptance of lower values for older cables shall be made on an individual basis (10 MΩ is a realistic lower limit for cables under 60 m [200 ft]).

3.11.10.3 Radio Frequency Cable Tests

The following standard tests shall be performed for radio frequency and video cables. Alternate procedures may be used with the approval of the contracting officer or as specified in design drawings or specifications.

3.11.10.3.1 Continuity Tests

The continuity tests for coaxial, twinaxial, triaxial, and balanced-pair (T43) cables shall be performed as specified in 3.11.10.1.

3.11.10.3.2 Insulation-Resistance Test

3.11.10.3.2.1 Coaxial Cable

The insulation-resistance test shall be performed by applying the ohmmeter leads of a high-input impedance volt-ohmmeter (set on R × highest range) to the inner and outer conductor of the connector ferrule.

If the meter indicates off-scale high or infinite resistance, the testing shall proceed as follows (shield-to-shield and shields-to-connector-body also apply to the test):

a. Connect the voltmeter and 125 VDC source in series.

b. Set the meter on the 5 V range and check to see that the meter has 11 MΩ input resistance on this scale.

With connectors installed, the coaxial cable shall have a resistance exceeding 500 MΩ indicated on the meter as 2.7 V or less. The insulation resistance from shield to shield and from shields to connector body may be as low as 100 MΩ (12.4 V on the 50 V scale).

The insulation-resistance test shall be performed in accordance with MIL-DTL-17, paragraph 4.8.5 and as specified by the cable and/or test equipment manufacturer.

3.11.10.3.2.2 Twinaxial Cable and Balanced Pairs (T43, Cat5e, or Cat6)

The insulation-resistance tests for twinaxial cable and balanced pairs (T43, Cat5e, or Cat6) shall be as described in 3.11.10.2.

3.11.10.3.3 Time Domain Reflectometer (TDR) Test

The purpose of the TDR test is to obtain the return loss-versus-distance profile of the cable system. A radio frequency pulse is transmitted down the cable and the energy reflected back from any discontinuities or impedance variation is detected and displayed. The distance to the discontinuity determines the time it takes for the reflected energy to return to the (reference) detector and the magnitude of the reflected signal is a function of the return loss (reflection coefficient) at the point of the discontinuity (reflection point). From this, the magnitudes and locations of
discontinuities (faults such as breaks, misalignments, corrosion, etc.) can be determined and the necessary corrective actions taken. A rise on the display indicates an increase in impedance (a broken wire or frayed shield); a dip on the display indicates a drop in impedance (a short) (refer to Figure 23 and Figure 24 for examples; the actual presentation may vary depending on the instrument used).

Cables shall be tested using a TDR that delivers a sine-shaped, controlled-bandwidth signal and has outputs for an X-Y recorder. A pulse width of 10 nanoseconds or less shall be used to test cables less than 90 m (300 ft) in length. Shorting plugs should be used wherever possible during the test.

3.11.10.3.3.1 Coaxial Cable

The following steps shall be performed:

a. Connect the coaxial cable to the TDR with the opposite end open circuited and adjust the scope display to obtain both entrance and exit discontinuity spikes (see Figure 23, view D).

b. Short the opposite end of the cable and verify that a negative spike occurs equal to and located at the exact former rise point of the positive spike.

c. Open the opposite end and take a graphic readout on the recorder. Record the length/division setting on the printout.

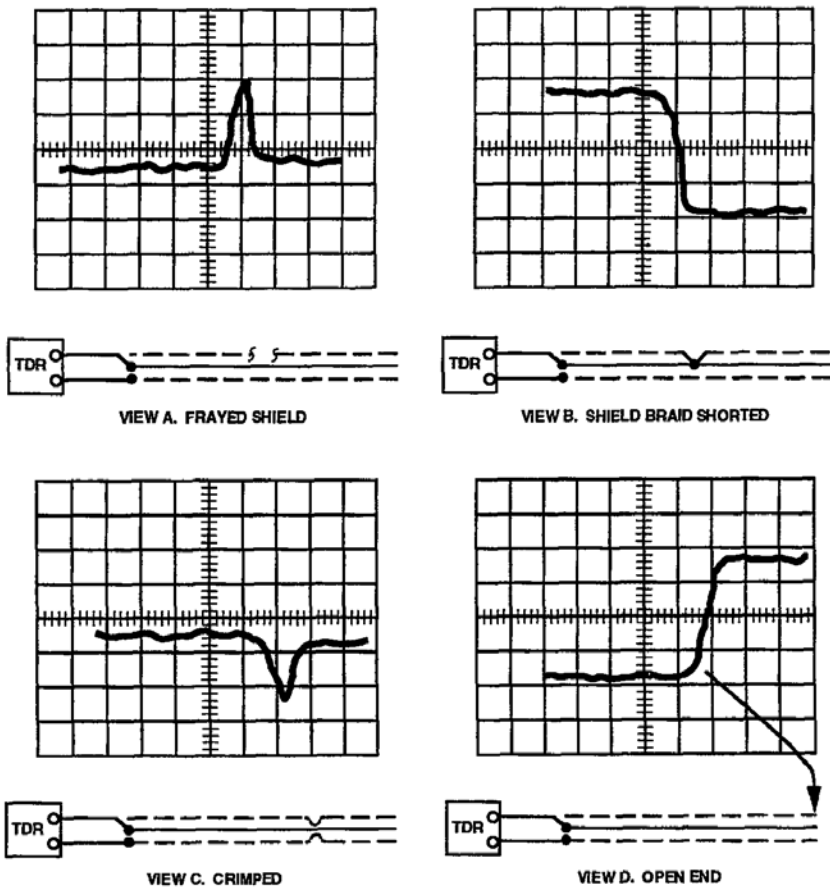

Figure 23. TDR Traces for Coaxial Cable

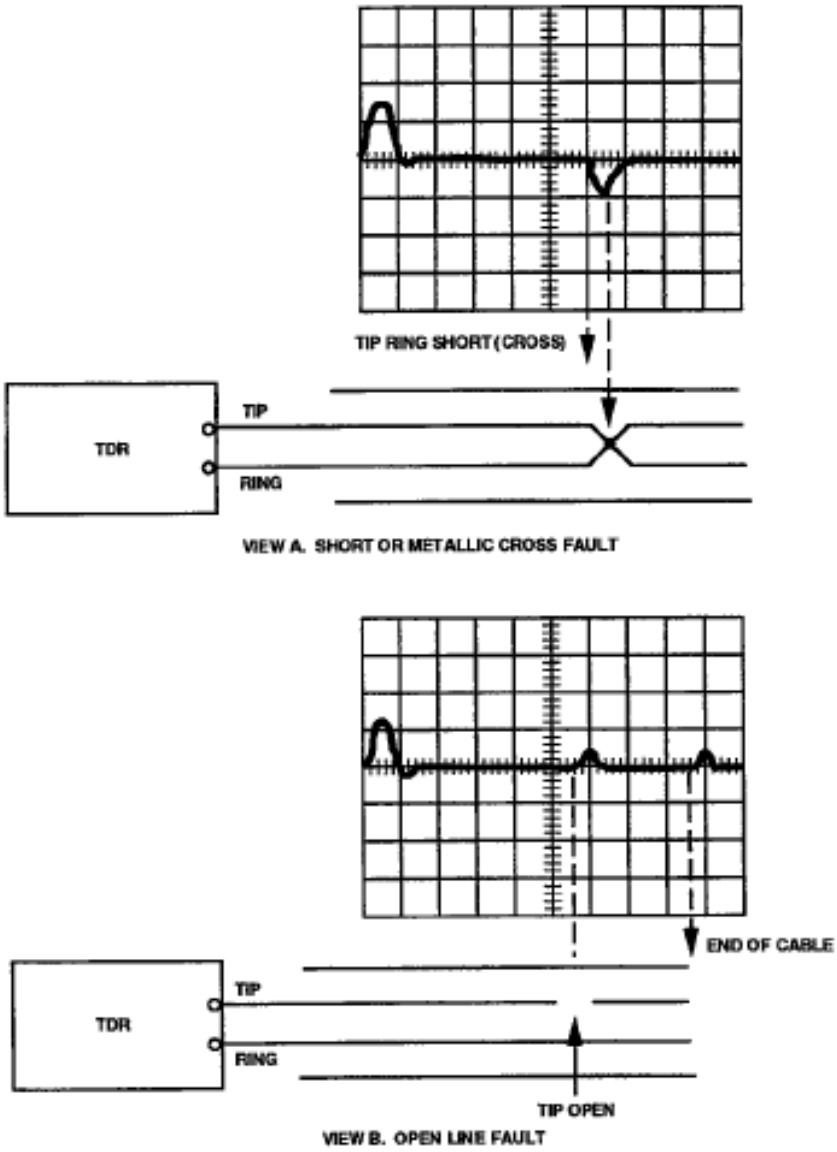

Figure 24. TDR Fault Traces for Twinaxial Cable (Sheet 1 of 2)

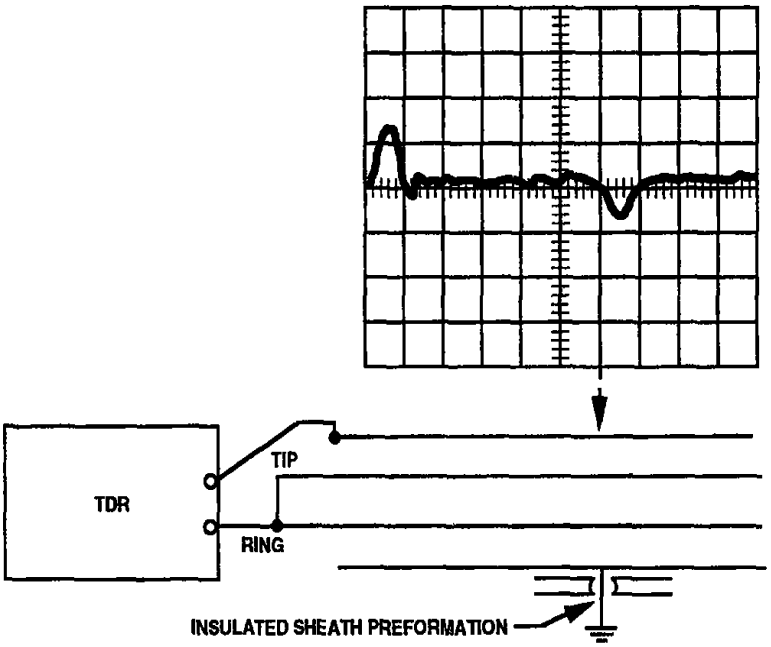

VIEW C. GROUNDED SHEATH FAULT

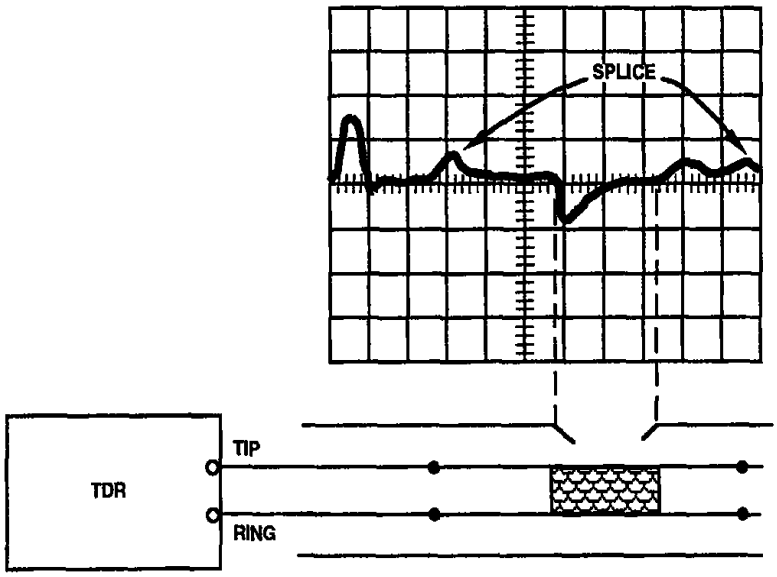

VIEW D. WATER OR MOISTURE FAULT

Figure 24. TDR Fault Traces for Twinaxial Cable (Sheet 2 of 2)

3.11.10.3.3.2 Twinaxial Cable or Balanced Pairs (Cat5e, Cat6, or T43)

The following steps shall be performed:

a. With conductors connected to the TDR and the opposite end open, adjust the scope time scale to obtain both discontinuity spikes (see Figure 24, view B).

b. Short the conductors at the opposite end and verify that a negative spike occurs equal to and located at the exact former rise point of the position spike.

c. Remove the short and take a graphic readout of the open end and record the length/division setting.

d. Connect the TDR to one conductor (tip) and shield and display the discontinuity spikes with the opposite end open.

e. Place the short on the opposite end and verify the location and presence of the negative spike.

f. Repeat steps c and e.

g. Repeat steps d, e, and f for the other conductor (ring).

3.11.10.3.3.3 Triaxial Cable TDR Test

Numerous commercial bench and handheld TDR testers are available for troubleshooting and fault detection in triaxial cables. For test setups and instructions, refer to the manufacturers' user's guides for specific testers.

3.11.11 AC Power Cables

Other specially insulated or armored cables dedicated for use with alternating-current power shall conform to KSC-SPEC-E-0017.

3.12 Mineral-Insulated (MI) Cable

MI cable shall be installed in accordance with KSC-SPEC-E-0017. Termination procedures shall be in accordance with 79K06110.

3.13 Transducers

Sensors, transducers, and signal conditioners for use in GSE systems shall be selected as specified in KSC-NE-9187.

3.14 Electromagnetic Interference Tests

Specific ground support electronic equipment may require testing for electromagnetic interference. This equipment shall be in accordance with MIL-STD-461F. The contract technical

representative shall identify this equipment and specify how the equipment must be tested for conducted and radiated emissions.

3.15 Fabrication Process Waste Disposal

Controls of waste materials generated during the fabrication process shall conform to CFR Title 40, Parts 260–282; Florida Administrative Code (FAC) Florida Department of Environmental Protection (FDEP), Division 62; KNPR 8500.1; and the following rules:

a. No person shall collect, transport, store, recycle, use, or dispose of waste materials generated during the fabrication process in any manner that endangers the public health or welfare or the environment.

b. These waste materials shall not be discharged into soils, sewers, drainage systems, septic tanks, surface waters or ground waters, water courses, or marine waters.

c. Care shall be taken not to mix the wastes generated during fabrication.

d. Containers/tanks used for waste disposal shall be labeled with the type of waste they contain.

e. Wastes generated during the fabrication process shall be kept to a minimum through careful planning of the amounts of material needed.

f. It is the user's obligation to properly store all hazardous materials and inform the local emergency planning organization of the quantity on hand and its location.

g. Each user shall maintain records on the weight of hazardous material used and what happened to the material, i.e., whether it was consumed in the product, released into the environment (spilled or released through air emissions, land discharge, water discharge, or underground injection), used to generate energy onsite, used to generate energy offsite, recycled offsite, recycled onsite, treated offsite, or treated onsite.

3.16 Fiber-Optic Cables

The following paragraphs provide requirements for termination and cabling of both single-mode and multi-mode fiber in accordance with NASA-STD-8739.5. Facilities, equipment, and materials used in the fabrication, assembly, and installation of fiber-optics shall comply with this specification and the requirements of NASA-STD--8739.5. Terms related to fiber-optic cables are defined in 6.2 and additional information may be found in TIA-440-B.

3.16.1 Optical-Fiber End Preparation

The supplier's engineering documentation shall define the parts, tooling, equipment, and procedures used in preparing the fiber-optic cable for termination. All parts, materials, and tooling and equipment shall be verified for compliance to the engineering documentation before fabrication activities begin.

a. Cables shall be prepared for termination in a fashion that will allow for the fiber to be exposed without sustaining damage or contamination.

b. All outer protective materials shall be removed, in the proper dimensions, in accordance with the supplier's engineering documentation.

c. The use of chemical strippers (e.g., acetone) for removal of certain buffer materials is acceptable. Chemically stripped fiber ends shall be thoroughly cleaned to remove any residual chemical stripping compounds and buffer materials immediately after stripping. This process shall be documented by the supplier. All necessary safety precautions shall be observed.

d. All parts that come into contact with the adhesives, including all dispenser parts and mixing pans, as well as the fiber and connector to be bonded, must be thoroughly cleaned with appropriate solvents before bonding.

e. The optical fiber shall be further prepared if warranted by the specific application, fiber construction, or process requirement. The supplier's engineering documentation shall specify any additional requirements.

f. Procedures for collecting, controlling, and disposing of fiber-optic waste shall be documented. Fiber-optic waste is a safety concern and shall be handled as such during disposal. Incineration is the recommended method of safe disposal.

g. Inspection techniques that produce core illumination shall be used.

h. The connector endface may be finished either by polishing or cleaving provided that the process is compatible with the quality requirements established by the supplier's engineering documentation for the finished product.

3.16.2 Cleaning

Specific procedures shall be developed, documented, and maintained for cleaning, drying, and examining parts. Prior to use, the appropriate engineering activity shall verify the compatibility of the solvents used for cleaning the assembly and all materials, including epoxies. If not terminated immediately, prepared cable components shall be protected from contamination.

Fiber-optic terminations to be cleaned shall be handled in a manner that will not degrade or damage the termination. Cleaning processes shall not degrade the optical characteristics of the

termination. Cleaning shall ensure removal of dirt, oil, grease, and particulate matter. Terminations shall be cleaned within a time frame that allows all contaminants to be removed.

Cleaning solvents shall be of the type specified in the engineering documentation. Manual cleaning of fiber terminations shall be performed using a solvent and a wipe or swab. The wipe or swab shall be nonabrasive, lint-free, and manufactured either by soxhlet extraction to remove oils, resins, or other contaminants, or by another means that would produce only a small amount of nonvolatile residue.

3.16.3 Splicing

Fiber-optic cables shall be prepared for splicing in accordance with 3.16.1. Cleaved fiber ends must be clean, fragment-free, and crack-free with minimum chips or other defects as shown in NASA-STD-8739.5, Appendix A. Fiber cable shall have an endface angle as required by the engineering documentation. Equipment used shall meet the criteria in NASA-STD-8739.5.

Splices should be of the construction, weight, and physical dimensions specified by engineering documentation. The design should (1) meet the requirements for optical, mechanical, and environmental performance as specified by engineering documents and NASA-STD-8739.5; (2) provide tensile strength continuity between spliced cables without the cable tensile load being applied to the splice junction; and (3) provide cable stress relief and environmental sealing between the cables and splice to prevent external contaminants from entering. The stress relief should provide protection from both cable tensile forces and cable axial compressive forces. The use of splice trays is recommended for multiple splices.

All splice parts of the same type should be physically and functionally interchangeable without the need to modify them or the splicing equipment. When dissimilar metals are used in contact with each other, protection against electrolysis and corrosion should be provided. Metal spraying or metal plating of dissimilar base metals to provide similar or suitable abutting surfaces is permitted. Seals should provide isolation from humidity and/or contamination for splice interior parts.

3.16.3.1 Presplicing Examination

Prior to splicing, the fiber shall be examined to ensure there is no contamination, blockage of the internal fiber channel, unacceptable conditions as shown in NASA-STD-8739.5, Appendix A, as applicable, or other areas of nonconformance to the specific requirements of the engineering documentation.

3.16.3.2 Splicing Method

Splices shall be made using the appropriate method as described in the following paragraphs, or as specified in the engineering documentation.

3.16.3.2.1 Fusion Splicing

Fusion splicing shall be performed in accordance with engineering documentation. Completed fusion splices shall be able to withstand a minimum 4.45 N (1 lb) pull test, or as specified in the engineering documentation.

3.16.3.2.2 Mechanical Splicing

Mechanical splicing shall not be used for cables intended for use in spaceflight operations. Mechanical splicing of fiber-optics shall be performed in accordance with engineering documentation.

3.16.3.2.3 Chemical Splicing

Chemical splicing shall only be used for temporary joining of fiber-optics (i.e., testing).

3.16.3.3 Splice Requirements

Completed splices shall meet the following minimum requirements:

3.16.3.3.1 Location

Splices shall not be located in areas where the cable is flexed except when a splice is recoated and rejacketed in accordance with the manufacturer's original specifications.

3.16.3.3.2 Protection

Splices shall be protected. If a splice enclosure cannot be used for a specific application, engineering documentation shall provide for other means of protection.

3.16.3.3.3 Strength Member

Strength members shall be secured to splice enclosures, or other means of protection, to prevent mechanical stress on the optical fiber.

3.16.4 Fiber-Optic Cable Assemblies

A fiber-optic cable assembly consists of a prepared fiber-optic cable, connector, and associated hardware. Materials used shall be in accordance with NASA-STD-8739.5.

3.16.4.1 Cable Assembly

Fiber-optic cables shall be prepared for the connector assembly in accordance with the procedures outlined in 3.16.1. Cables shall be identified in such a way to distinguish these cables from wire or coaxial cables. Cable connectors shall be permanently marked with mating connector designation within 15 cm (6 in) of the connector body, or as stated in the engineering documentation.

3.16.4.1.1 Preassembly Verification

Prior to assembly, prepared fiber-optic cables shall be subject to documented in-process peer verification for (1) correct dimensions for the cable stripping; (2) damage to a strength member; (3) cracks, nicks, cuts, or other damage to cable components in the termination area, including optical fiber; (4) wicking or damage to the chemical strip; and (5) cleanliness as defined in 3.16.2. Any other verifications defined in the engineering documentation shall also be performed.

3.16.4.1.2 Preassembly Examination

Prior to assembly, prepared fiber-optic connector parts shall be examined for (1) blockage in the internal fiber channel (the prepared fiber shall not be used to check for blockage); (2) cleanliness as defined in 3.16.2; and (3) cracks or deformities on the connector ferrule.

3.16.4.2 Completed Cable Assemblies

The connector should be of the construction, weight, and physical dimensions specified by engineering requirements. The design should (1) meet the requirements for optical, mechanical, and environmental performance as specified by engineering requirements; (2) provide stress relief for the cable and environmental sealing between the cables and connector to prevent external contaminants from entering. The stress relief and connector/cable attachment method should provide protection from both cable tensile forces and cable axial compressive forces.

All connector parts of the same type should be physically and functionally interchangeable without the need to modify such items or the termination equipment. A complete mated connector design should be comprised only of parts from the same manufacturer to prevent problems with the connectors mating. When dissimilar metals are used in contact with each other, protection against electrolysis and corrosion should be provided. Metal spraying or metal plating of dissimilar base metals to provide similar or suitable abutting surfaces is permitted. Seals should be used to isolate connector interior parts from humidity and/or contamination.

Engineering documentation shall address the maximum allowable connector coupling loss, connector mate durability, staking and torque values, and the minimum cable bend radii.

For inspection purposes, clear heat-shrinkable sleeving is recommended. Completed cable assemblies shall be inspected to verify the following conditions:

a. The strength member, when visible, is uniformly distributed and securely attached to the connector.

b. The heat shrinkable sleeving and/or crimp sleeve is positioned properly.

c. The connector endface geometry is compliant with engineering documentation.

d. The connector endface meets requirements in accordance with NASA-STD-8739.5, Appendix A1, or the engineering documentation.

e. The length of the connector ferrule is compliant with engineering documentation.

f. The strain relief device is properly positioned and attached in accordance with the engineering documentation.

g. Cleanliness meets the requirements defined in 3.16.2.

h. Cable axial alignment with the connector is within 5 cm (2 in) of the termination or in accordance with the engineering documentation.

i. The assembly is free of nicks/cuts exposing underlying elements.

j. The assembly is free of kinks or twists.

k. The proper cable designation marking are shown.

3.16.5 Fiber-Optic Assemblies

Fiber-optic assemblies include such devices as electro-optical components, couplers, dividers, wavelength multiplexers, and splice enclosures. The optical fibers found in these devices consist of the fiber (core and cladding) and the coating surrounding the fiber. Optical fibers differ from fiber-optic cables which may have a buffer, loose tube, strength members, and outer jacket as additional protective sheathing.

3.16.5.1 Fiber-Optic Connector Termination

The optical fiber shall be prepared in accordance with 3.16.1.

3.16.5.1.1 Preassembly Verification

Prior to assembly, prepared optical fibers shall be subject to a documented, in-process, peer verification for (1) correct stripping dimensions; (2) cracks, nicks, cuts, or other damage to the coating and fiber; (3) chemical strip wicking or damage; and (4) cleanliness as defined in 3.16.2. Any other verifications (e.g., to verify heat-shrinkable sleeving dimensions or crimp sleeve requirements) required by engineering documentation shall be performed.

3.16.5.1.2 Preassembly Examination

Prior to assembly, fiber-optic connector parts shall be examined for (1) blockage in the internal fiber channel (the prepared fiber shall not be used to check for blockage); (2) cleanliness as defined in 3.16.2; and (3) cracks or deformities on the connector ferrule.

3.16.5.2 Post–Fiber-Optic-Connector-Termination Inspection

Terminated fiber-optics shall be inspected to verify that (1) the heat-shrinkable sleeving and/or crimp sleeve is positioned properly; (2) the connector endface geometry is compliant with engineering documentation; (3) the connector endface requirements are in accordance with

NASA-STD-8739.5, Appendix A, or engineering documentation; and (4) the strain relief is properly positioned in accordance with the engineering documentation.

When inspecting optical fiber, inspection techniques that produce core illumination shall be used.

3.16.5.3 Fiber-Optic Routing

The optical fiber shall not be routed over sharp edges or corners unless appropriate protection is provided. The minimum bend radius of the routed optical fiber shall be in accordance with engineering documentation. The optical fiber shall be tied down (e.g., lacing cord) in accordance with the engineering documentation to prevent subsequent damage due to processing, handling, and operational environments. The ties shall not pinch, deform, or otherwise stress the optical fiber. The ties shall be loose enough to allow the fibers to move slightly due to thermal expansion and contraction. Overly tight ties can cause microbending of the fiber and affect performance or reliability. Conduits should be used to route optical fibers through areas where access is limited or restricted. Staking or conformal coating shall not be applied to optical fiber unless specifically required in the engineering documentation.

3.16.6 Testing

3.16.6.1 Fiber-Optic Splices

Splices shall be verified. Optical time domain reflectometry (OTDR), as well as other appropriate test procedures from NASA-STD-8739.5, Appendix B, should be used after the completion of the splicing operation to ensure that loss characteristics are consistent with the loss allowances established by design and operation engineering documentation. Records of testing shall be maintained with the assembly/subassembly documentation. NASA-STD-8739.5, Appendix B, provides a list of available test and verification documents.

3.16.6.2 Fiber-Optic Cable Assemblies

All completed cable assemblies shall be tested to ensure that measured optical performance (e.g., insertion loss or return loss) meets or exceeds the performance requirements in the engineering documentation. Records of testing shall be maintained with the assembly or subassembly documentation. NASA-STD-8739.5, Appendix B, provides a list of available test and verification documents.

Upon completion of initial testing (in accordance with the paragraph above), the cable assemblies shall be subjected to workmanship temperature cycling or preconditioning as identified in the engineering documentation. Cable assemblies shall be retested and, in addition, examined for the following:

a. Cracks in the fiber endface using normal inspection techniques. The fiber-optic cable assembly shall be inspected without touching the fiber as part of the examination.

b. Pistoning of the fiber in the connector.

c. Cracks in the epoxy bond line at the endface.

d. Shrinkage of the outer jacket. Other cable components shall also be evaluated for shrinkage. An unacceptable amount of shrinkage shall be defined by an excessive optical loss value as specified in the engineering documentation.

3.16.6.3 Fiber-Optic Assemblies

All finished fiber-optic assemblies shall be tested to ensure that measured optical performance meets the performance requirements in the engineering documentation. Records of testing shall be maintained with the assembly or subassembly documentation. NASA-STD-8739.5, Appendix B, provides a list of available test and verification documents.

Upon completion of initial testing (in accordance with the paragraph above), the fiber-optic assemblies shall be subjected to workmanship temperature cycling or preconditioning as identified in the engineering documentation. Fiber-optic assemblies shall be retested and, in addition, examined for the following:

a. Cracks in the fiber endface. The examination shall be done using direct and back lighting. The optical fiber shall be back-lit using an incoherent, low-intensity light source from the opposite end of the fiber, without touching the fiber as part of the examination. When the opposite end of the fiber is not accessible, inspection techniques that produce core illumination shall be used.

b. Pistoning of the fiber in the connector or termination.

c. Cracks in the epoxy bond line at the endface.

d. Shrinkage of the buffer or outer jacket.

3.16.6.4 Optical Time-Domain Reflectometer (OTDR) Test

In accordance with NASA-STD-8739.5, the optical performance (e.g., insertion loss or return loss) of completed fiber-optic cable assemblies, fiber-optic splices, and fiber-optic assemblies shall be measured to ensure that it meets or exceeds the performance requirements in the engineering documentation. An OTDR test using fiber-optic test procedures (FOTP) outlined in Appendix B of NASA-STD-8739.5 (i.e., TIA-455-78-B) shall be used for the verification.

3.16.6.5 OTDR Basic Theory of Operation

An OTDR sends short pulses of light into a fiber. Light scattering occurs in the fiber due to discontinuities such as connectors, splices, bends, and faults. An OTDR uses the effects of Rayleigh scattering and Fresnel reflection to measure the fiber's condition, but the power level of the Fresnel reflection is tens of thousands of times higher than that of the backscatter. Rayleigh scattering occurs when a pulse travels down the fiber and small variations in the material, such as discontinuities in the index of refraction, cause light to be scattered in all directions. However, the phenomenon in which small amounts of light are reflected directly back toward the

transmitter is called backscattering. Fresnel reflections occur when the light traveling down the fiber encounters abrupt changes in material density that may occur when there is an air gap at connections or breaks. A very large amount of light is reflected, as compared with the Rayleigh scattering. The strength of the reflection depends on the degree of change in the index of refraction.

An OTDR detects and analyzes the backscattered signals. The signal strength is measured for specific intervals of time and is used to characterize events. The OTDR calculates distances to events as follows:

$$\text{Distance} = \frac{c}{n} \times \frac{t}{2}$$

Where:

c = speed of light in a vacuum (2.998×10^8 m/s)
t = time delay from the launch of the pulse to the reception of the pulse
n = index of refraction of the fiber under test (as specified by the manufacturer)

OTDRs are microprocessor-based diagnostic tools that can be PC-based, bench-type, or hand-held models. Depending on the model, the basic setup and flow of data will be as shown in Figure 25.

Refer to the manufacturer's instructions or user's guide for proper setup and operation of individual OTDRs.

Users rely on optical time-domain reflectometry to characterize optical fiber and optical connection properties in the field. An OTDR transmits an optical pulse through an installed optical fiber. The OTDR measures the fraction of light that is reflected due to Rayleigh scattering and Fresnel reflection. By comparing the amount of light scattered back at different times, the OTDR can determine fiber and connection losses.

When several fibers are connected to form an installed cable plant, the OTDR can characterize optical fiber and optical connection properties along the entire length of the cable plant. A fiber-optic cable plant consists of optical fiber cables, connectors, splices, mounting panels, jumper cables, and other passive components. A cable plant does not include active components such as optical transmitters or receivers.

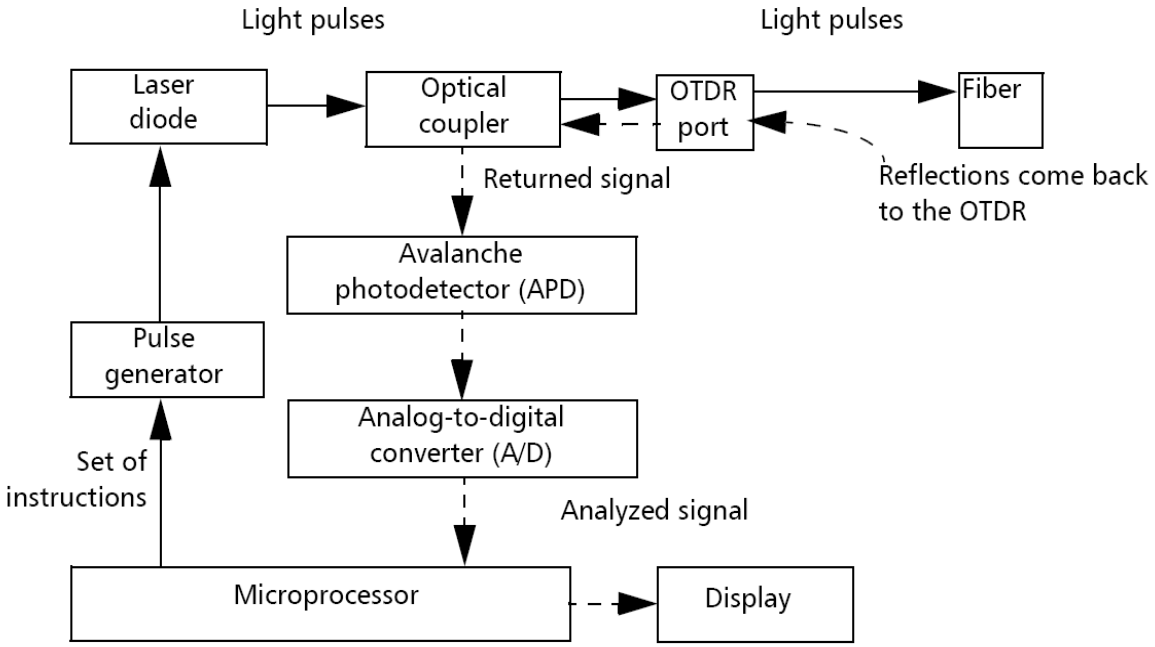

Figure 25. Typical OTDR Block Diagram

The OTDR displays the backscattered and reflected optical signal as a function of length. The OTDR plots half the power in decibels (dB) versus half the distance. Plotting half the power in decibels and half the distance corrects for round-trip effects. By analyzing the OTDR plot, or trace, users can measure fiber attenuation and transmission loss between any two points along the cable plant. Users can also measure insertion loss and reflectance of any optical connection. In addition, users can locate fiber breaks or faults with the OTDR trace.

Figure 26 shows an example OTDR trace of an installed cable plant. OTDR traces can have several common characteristics. An OTDR trace begins with an initial input pulse. This pulse is a result of Fresnel reflection occurring at the connection to the OTDR. Following this pulse, the OTDR trace is a gradual down-sloping curve interrupted by abrupt shifts. Periods of gradual decline in the OTDR trace result from Rayleigh scattering as light travels along each fiber section of the cable plant. Periods of gradual decline are interrupted by abrupt shifts called point defects. A point defect is a temporary or permanent local deviation of the OTDR signal in the upward or downward direction. Point defects are caused by connectors, splices, or breaks along the fiber length. Point defects, or faults, can be reflective or nonreflective. An output pulse at the end of the OTDR trace indicates the end of the fiber cable plant. This output pulse results from Fresnel reflection occurring at the endface of the output fiber.

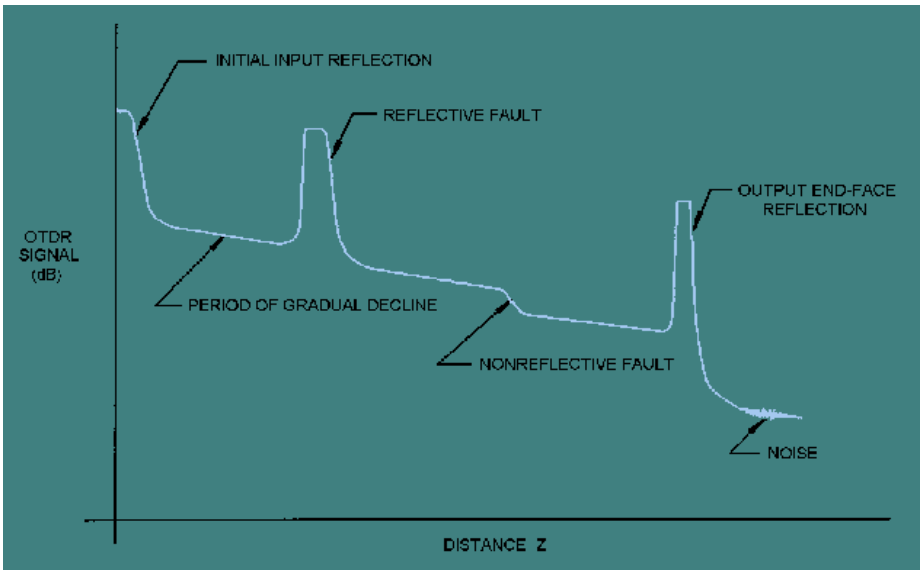

Figure 26. OTDR Trace of an Installed Cable Plant

3.16.6.5.1 Attenuation

The test method for measuring the attenuation of an installed optical fiber using an OTDR is specified in TIA/EIA-455-78-B. The accuracy of this test method depends on the user entering the appropriate source wavelength, pulse duration, and fiber length (test range) into the OTDR. In addition, the effective group index of the test fiber is required before the attenuation coefficient and accurate distances can be recorded. The group index (N) is provided by fiber manufacturers or is found using TIA-455-133-A. If the test parameters are entered correctly, OTDR fiber attenuation values will closely coincide with those measured by the cutback technique. Test personnel can connect the test fiber directly to the OTDR or to a dead-zone fiber. This dead-zone fiber is placed between the test fiber and OTDR to reduce the effect of the initial reflection at the OTDR on the fiber measurement. The dead-zone fiber is inserted because minimizing the reflection at a fiber joint is easier than reducing the reflection at the OTDR connection.

Figure 27 illustrates the OTDR points for measuring the attenuation of the test fiber using a dead-zone fiber. Fiber attenuation between two points along the test fiber is measured on gradual down-sloping sections on the OTDR trace. No point defects should be present along the portion of fiber being tested.

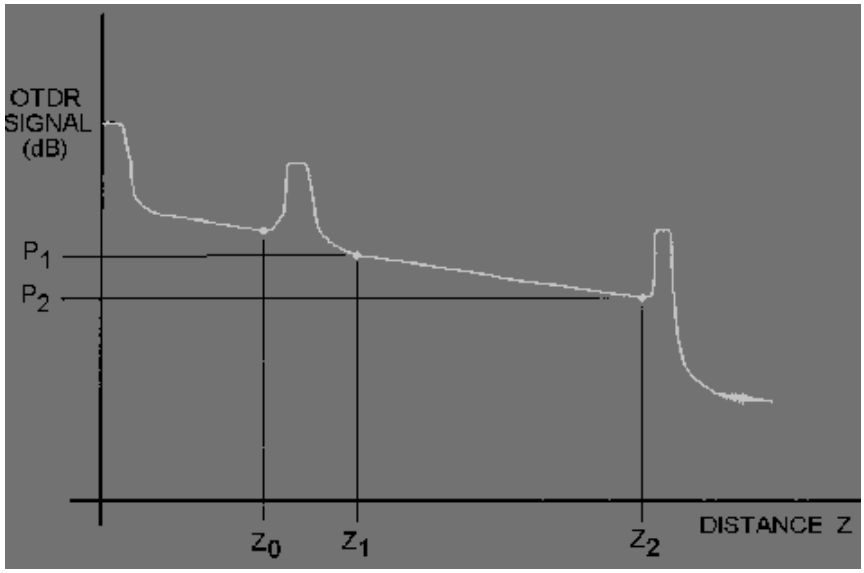

Figure 27. OTDR Measurement Points for Measuring Fiber Attenuation, Using Dead-Zone Fiber

OTDRs are equipped with either manual or automatic cursors to locate points of interest along the trace. In Figure 27, a cursor is positioned at a distance z_o on the rising edge of the reflection at the end of the dead-zone fiber. Cursors are also positioned at distances z_1 and z_2. The cursor positioned at z_1 is just beyond the recovery from the reflection at the end of the dead-zone fiber. Since no point defects are present in Figure 27, the cursor positioned at z_2 locates the end of the test fiber. Cursor z_2 is positioned just before the output pulse resulting from Fresnel reflection occurring at the end of the test fiber.

The attenuation of the test fiber between points z_1 and z_2 is $(P_1 – P_2)$ dB. The attenuation coefficient (α) is

$$a=\frac{(P_1 - P_2)}{(z_2 - z_1)}\text{dB/km}$$

The total attenuation of the fiber including the dead zone after the joint between the dead-zone fiber and test fiber is

$$\text{Attenuation} = (P_1 - P_2)\frac{(z_1 - z_0)}{(z_2 - z_1)}\text{dB}$$

If fiber attenuation is measured without a dead-zone fiber, z_0 is equal to zero ($z_0 = 0$). At any point along the length of fiber, attenuation values can change depending on the amount of optical power backscattered due to Rayleigh scattering. The amount of backscattered optical power at each point depends on the forward optical power and its backscatter capture coefficient. The backscatter capture coefficient varies with length depending on fiber properties. Fiber properties that may affect the backscatter coefficient include the refractive index profile, numerical aperture

(multimode), and mode-field diameter (single mode) at the particular measurement point. The source wavelength and pulse width may also affect the amount of backscattered power.

By performing the OTDR attenuation measurement in each direction along the test fiber, test personnel can eliminate the effects of backscatter variations. Attenuation measurements made in the opposite direction at the same wavelength (within 5 nm) are averaged to reduce the effect of backscatter variations. This process is called bidirectional averaging. Bidirectional averaging is possible only if test personnel have access to both fiber ends. OTDR attenuation values obtained using bidirectional averaging should compare with those measured using the cutback technique in the laboratory.

3.16.6.5.2 Point Defects

Point defects are temporary or local deviations of the OTDR signal in the upward or downward direction. A point defect, or fault, can be reflective or nonreflective. A point defect normally exhibits a loss of optical power. However, a point defect may exhibit an apparent power gain. In some cases, a point defect can even exhibit no loss or gain. Figure 26 (shown previously) illustrates a reflective fault and a nonreflective fault, both exhibiting loss. Figure 28 shows a nonreflective fault with apparent gain and a reflective fault with no apparent loss or gain.

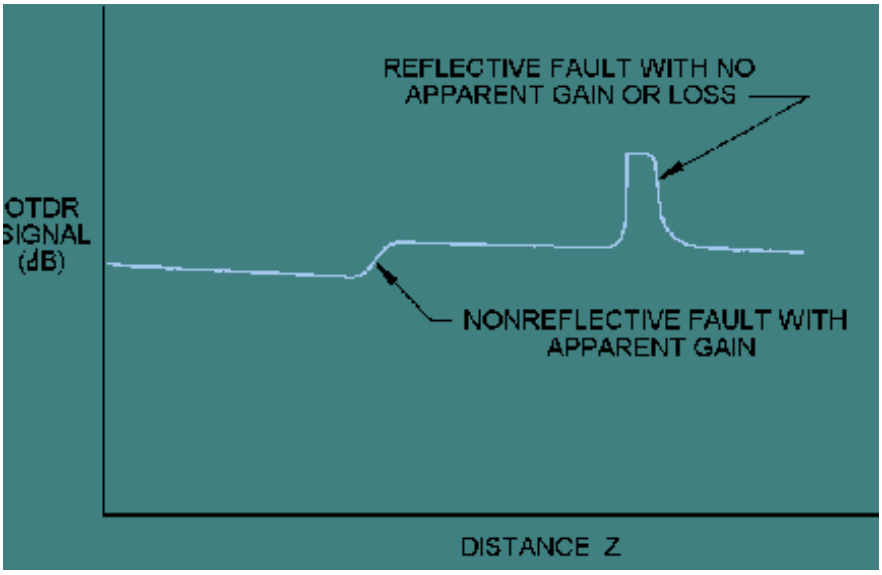

Figure 28. OTDR Trace Showing a Nonreflective Fault With Apparent Gain and a Reflective Fault With No Apparent Loss or Gain

Point defects are located and measured using TIA/EIA-455-78. Test personnel must enter the appropriate input parameters including the source wavelength, the pulse duration, and the fiber or cable group index into the OTDR. The nature of fiber point defects depends on the value of each parameter entered by the user. The pulse duration usually limits the length of the point defect while other input parameters, such as the wavelength, can vary its shape. If the length of the fiber point defect changes with the pulse duration, then the OTDR signal deviation is in fact a

point defect. If the length remains the same, then the OTDR signal deviation is a region of high fiber attenuation. Regions of high fiber attenuation are referred to as attenuation nonuniformities.

Fiber point defects occur from factory fiber splices or bends introduced during cable construction or installation. For shipboard applications, manufacturers are not allowed to splice fibers during cable construction. Fiber joints are natural sources of OTDR point defects. However, fiber breaks, cracks, or microbends introduced during cable installation are additional sources of point defects.

Point defects that occur at fiber joints are relatively easy to identify because the location of a fiber joint is generally known. A reflective or nonreflective fault occurs at a distance equal to the location of the fiber joint. In most circumstances, an optical connector produces a reflective fault, while an optical splice produces a nonreflective fault.

Reflective and nonreflective faults occurring at distances other than fiber joint locations identify fiber breaks, cracks, or microbends. A fiber break produces a reflective fault because fiber breaks result in complete fiber separation. Fiber cracks and microbends generally produce nonreflective faults.

A point defect may exhibit apparent gain because the backscatter coefficient of the fiber present before the point defect is higher than that of the fiber present after. Test personnel measure the signal loss or gain by positioning a pair of cursors, one on each side of the point defect. Figure 29 illustrates the positioning of the cursors for a point defect showing an apparent signal gain. The trace after the point defect is extrapolated as shown in Figure 29. The vertical distance between the two lines in Figure 29 is the apparent gain of the point defect.

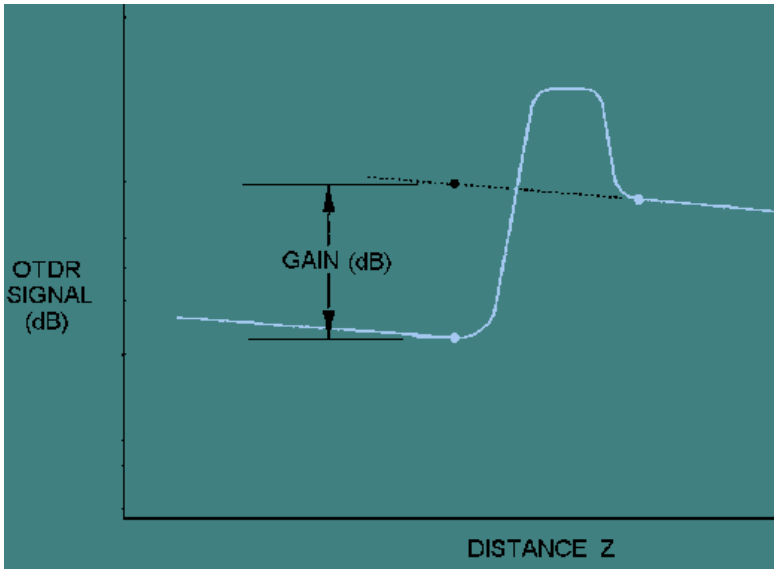

Figure 29. Extrapolation for a Point Defect Showing an Apparent Signal Gain

Point defects exhibiting gain in one direction will exhibit an exaggerated loss in the opposite direction. Figure 30 shows the apparent loss shown by the OTDR for the same point defect shown in Figure 29 when measured in the opposite direction. Bidirectional measurements are conducted to cancel the effects of backscatter coefficient variations. Bidirectional averaging combines the two values to identify the true signal loss. Bidirectional averaging is possible only if test personnel have access to both ends of the test sample.

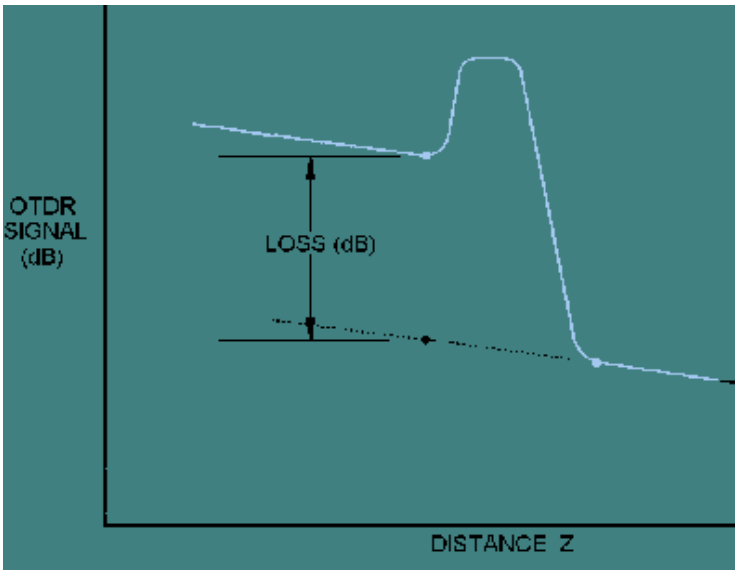

Figure 30. Exaggerated Loss Obtained at Point Defects Exhibiting Gain in One Direction by Conducting the OTDR Measurement in the Opposite Direction

OTDRs can also measure the return loss of a point defect. However, not all OTDRs are configured to make the measurement. To measure the return loss of a point defect, the cursors are placed in the same places as for measuring the loss of the point defect. The return loss of the point defect is displayed when the return loss option is selected on the OTDR. The steps for selecting the return loss option depend upon the OTDR being used.

3.16.7 Fiber-Optic Cable Assembly Installation

Fiber-optic cable assemblies should not be combined in the same wiring bundle as wire or coaxial cable assemblies. Care must be taken to prevent damage to fiber-optic cable assemblies during the installation process. Fiber-optic cables shall only be installed by trained and certified fiber-optic personnel. Training and certification shall be in accordance with NASA-STD-8739.5.

3.16.7.1 Tensile Load and Vertical Rise

The maximum installation tensile load, the maximum use tensile load, and the maximum vertical rise for cable assemblies installed in raceways, trays, ducts, or conduits and multifiber cables shall be specified on the engineering documentation.

3.16.7.2 Installation Bend Radius

The minimum bend radius experienced during installation (short-term) shall not be less than 10 times the cable diameter unless specified on the engineering documentation.

3.16.7.3 Installed Bend Radius

The minimum installed (long-term) bend radius shall not be less than 15 times the cable diameter unless specified on the engineering documentation.

3.16.7.4 Cable Tying

For installation, fiber-optic cable assemblies shall be tied in accordance with the engineering documentation. The minimum long-term bend radius shall not be violated at connector backshells. Tie-downs shall be tight enough to capture the fiber-optic cable but shall not deform the cable outer jacket. The ties shall not pinch, deform, kink, or otherwise stress the cable assembly.

3.16.7.5 Dust Caps

Dust caps shall be installed on all connectors when not in use.

3.16.7.6 Premating Inspection

Fiber-optic cable connector or termination endfaces shall be examined before they are mated and, if necessary, cleaned in accordance with 3.16.3.

3.16.7.7 Connector Torque

Fiber-optic connectors shall be torqued in accordance with engineering documentation.

3.16.7.8 Sharp Edges

Fiber-optic cable assemblies shall not be routed over sharp edges or corners unless appropriate protection is provided.

3.17 Ethernet

Ethernet is currently used in the Premise Distribution System (PDS) at KSC. There are plans to integrate as many systems as possible onto a redundant Ethernet transport using both copper and fiber cabling. KSC-STD-E-0021 lists the requirements for the PDS. Design and installation of Ethernet cabling, assemblies, and equipment should comply with KSC-STD-E-0021.

3.17.1 Ethernet Naming Conventions

The IEEE naming convention for Ethernet cables is as follows:

a. The first number (10, 100, 1000) indicates the transmission speed in megabits per second (Mbps).

b. The second term indicates transmission type: BASE = baseband; BROAD = broadband.

c. The last number indicates segment length. A 5 means a 500 m segment length from the original Thicknet.

d. In newer IEEE standards, letters replace numbers. For example, in 10BASE-T, the T means unshielded twisted-pair cables; in 100BASE-T4, the T4 indicates four such pairs.

4. QUALITY ASSURANCE PROVISIONS

4.1 Responsibility for Inspection and Test

The supplier is responsible for the performance of all inspection and test requirements specified herein. Except as otherwise specified, suppliers may use their own facilities or any other commercial inspection and test facilities and services acceptable to the Government. Inspection and test records shall be kept complete and, upon request, shall be made available to the contracting officer. The Government reserves the right to perform any of the inspections and tests set forth in the specification where such inspections are deemed necessary to ensure supplies and services conform to the prescribed requirements.

4.2 Certification of Personnel

All contractors and subcontractors are required to provide personnel who have the experience, knowledge, and demonstrable ability required to perform the various tasks that constitute an assigned job. Certification shall be required for individuals performing skilled tasks including, but not limited to, welding, riveting, soldering, potting and molding, and quality control. Before work begins, a representative of the contracting officer shall verify the qualifications of the contractor or subcontractor personnel by one or more of the following means:

a. Reviewing personal resumes that shall include information on the companies the employee worked for, a brief description of the work performed for each

company, and a description of any NASA specifications or procedures used in the work.

b. Verifying that employees with no previous background in the type of work required have successfully completed a training program/school of instruction for that type of work. The program shall be operated by the contractor and shall include familiarization with NASA specifications and procedures.

c. Verifying that employees who have previous experience have successfully completed a testing program.

d. Witnessing or approving the preparation of work samples.

4.3 Certification of Tooling and Test Equipment

The contractor shall establish and maintain a system for the calibration of all measuring and test equipment used to fulfill the contractual requirements. The calibration system shall comply with ISO 10012:2003(E), NCSL Z540.3, or KNPR 8730.1. All tooling, measuring, and test equipment shall be verified for accuracy at the intervals set forth in this specification or more often as required by the contracting officer. If documentation cannot be located to prove that the tooling, measuring, and/or test equipment that was used on a particular item was properly calibrated at the time it was used, then the item shall be reworked or retested.

4.3.1 Soldering Tools

Soldering tools shall be in accordance with NASA-STD-8739.3 or KSC-STD-E-0010, when applicable.

4.3.2 Crimping Tools

Crimping tools used in installation procedures shall be checked prior to the beginning of the initial production and at periodic intervals not to exceed 40 hours of production service or 30 days of time, whichever occurs first. The tools shall be inspected for wear and clearances between dies and limits. The clearances and dimensions shall conform to the respective standards of applicable specifications (such as MIL-DTL-22520G). Tools for crimping terminals and conductor splices (in accordance with SAE AS7928A and MIL-S-81824), as well as shield ferrules (in accordance with SAE AS21608 and 75M13676), shall be in accordance with NASA-STD-8739.4 and KSC Drawing 79K22638 as follows:

a. Type I (for uninsulated terminals and splices):

(1) Class 1: use only military-standard-approved tools

(2) Class 2: use tools recommended by the manufacturer or approved by the contracting officer

b. Type II (for insulated terminals and splices):

(1) Class 1: use only military-standard-approved tools

(2) Class 2: use tools recommended by the manufacturer or approved by the contracting officer

4.3.3 Crimping Tools, Special

Special tools for crimping, insertion, removal, or other uses pertaining to class 2 terminals (other than those conforming to SAE AS7928A, MIL-S-81824, or SAE AS21608) shall be as specified herein or as approved by the contracting officer.

4.3.4 Torque Wrenches

Unless otherwise specified, torque shall be applied to fasteners using torque wrenches that are in accordance with ASME B107.14-2004. The torque wrench shall be chosen so the torque values for a particular fastener will be between 20 percent and 80 percent of the full-scale torque.

Unless otherwise specified, the calibration of a torque wrench shall be checked before it is used for the first time and thereafter at intervals not to exceed 30 calendar days. A dated certification of these calibrations shall be attached to the wrench. Torque presetting wrenches shall be adjusted/calibrated, checked, and sealed with a suitable tamperproof material. The torque to which the wrench is set shall be clearly marked on the wrench. When practical, the torque wrench calibration may be checked before daily use and at the end of the day. Documenting this verification with a note in the Work Authorization Document (WAD) will reduce the need for extensive document searches to verify the certification in the event a torque wrench fails.

If a wrench is dropped, struck, or otherwise damaged or is possibly out of calibration, the wrench shall be checked before it is used again. If it is found to be out of calibration, the wrench shall not be used until it has been recalibrated.

4.3.5 Wire Stripping Tools

Wire stripping tools shall be in accordance with NASA-STD-8739.3 or KSC-STD-E-0010A. Their calibration shall be checked before they are used for the first time and at periodic intervals not to exceed 40 hours of production service or 30 calendar days.

4.3.6 Solderless Wrap Tools

Solderless wrap tools and inspection intervals shall be in accordance with SAE AMS 2695C.

4.3.7 Test Equipment

Electronic equipment (such as voltmeters and oscilloscopes) used to verify the performance of items during assembly and test shall be calibrated before they are used for the first time and at intervals not to exceed 12 months. Personnel should verify electronic test equipment has a valid calibration sticker prior to each use.

4.4 Equipment Checkout

Before equipment is used to perform any tests, it shall be inspected for workmanship using criteria from previous sections of this specification. Unless otherwise required by applicable checkout procedure documents, equipment shall be checked for the following:

a. Electrical continuity

b. Electrical isolation

c. Function (applied) to equipment containing electrical- or mechanical-action components

CAUTION

The person conducting the test should verify if any lockout/tagout procedures have been or need to be implemented as required by NPR 8715.3C and/or OSHA Standard 29 CFR 1910.147. Do not fasten or touch a probe or clip to any pin of any connector (including cable connectors) of the equipment being checked. A breakout box or adapter test fixture (or mating contact) shall be mated to the connector to make all electrical measurements.

NOTE

Prior to any test, all test fixtures and mating connectors shall be inspected and approved by the contracting officer. All pilot lamps or other sensitive items shall be removed for continuity and isolation tests, with all power OFF and disconnected from other equipment/systems.

4.4.1 Sequence of Tests

The following sequence of equipment checkout tests shall be followed:

a. Perform a continuity check on all normally closed connecting points.

b. Perform isolation checks on all normally open points.

c. Operate equipment or components and perform a continuity check on all normally open circuits, circuits having definite resistances, or circuits having a resistance change by operation.

d. Operate equipment or components and perform isolation checks on all normally closed circuits supposedly opened by operation.

4.4.2 Continuity Tests

During continuity tests, circuit breakers to which a power source is connected shall be in the OFF (open) position unless otherwise directed by a checkout procedure. Continuity tests of all wiring connections and verification of all termination points shall be made as follows:

a. The contractor shall test each cable, wire bundle, or electrical assembly for electrical continuity according to the wire running list or schematic.

b. The equipment approved by the contracting officer shall be used for continuity verification. This includes COTS testers as well as commercial or custom-made automatic testers.

c. Continuity checks shall be made between all points shown as closed circuits on the electrical advanced schematic. The measuring device shall be capable of detecting a difference of 10 percent of the resistance value to be tested or equal to the tolerance required if less than 10 percent.

   (1) The measuring device shall be set at the lowest ohm scale applicable to the readings (that is, R × 1 for a 0 Ω reading and others accordingly so that a 10-percent deviation is detectable). The verification of test equipment shall be performed just before the first reading. The verification shall be repeated whenever test equipment readings vary due to a reason such as the device having weak batteries. The meter shall be “zeroed” each time its range is changed during a test.

   (2) Each conductor of an assembly shall be tested for minimum resistance based on the length and type of cable.

   (3) Exposed metal shall be checked for continuity to the alternating current ground power line.

4.4.3 Isolation Checks

Isolation checks shall be made between all circuits that are shown on the advanced electrical schematics as normally open or that can be opened by manually, electrically, or mechanically operated components. All normally open circuits shall be checked to all other normally open points and to the chassis. Equipment or parts shall be operated as required to open all normally closed circuits to check the points for isolation. Isolation checks shall be made on equipment having electrical components and shall be as follows:

a. The contractor shall test each cable, wire bundle, or electrical assembly for isolation using a standard ohmmeter set on a range of 1 MΩ or higher. Unless otherwise specified, isolation shall be more than 10 MΩ, or infinity.

b. Insulation tests shall be performed on each cable, wire bundle, or exposed metal areas (ground potential) of panels, chassis, etc. See 3.11.10 for cable checkout. Chassis or other exposed metal normally at ground potential shall be tested to the power input line, aboveground transformer windings, and all other aboveground wiring with a minimum 10 MΩ reading, unless otherwise specified. This will ensure minimal ground fault currents due to failed or insufficient insulation.

c. An insulation-resistance tester having a test potential of 500 VDC shall be used on all equipment having parts capable of withstanding 500 V between any possible erroneous connections.

d. Equipment having sensitive devices (e.g., circuit cards) not capable of withstanding 500 V shall be removed or tested using 28 VDC in series with a voltmeter whose 50 V scale has a resistance of 1 MΩ. A circuit under test having a leak of 27 MΩ or less will cause the meter to register 1 V or more, indicating an unacceptably low value for isolation resistance. When checking aboveground wiring to the chassis, the wiring should be jumpered together as a common electrical point versus the chassis metal.

4.4.4 Functional Checks

When required by contract, functional checks shall be made on all checkout panels, distributors, and components that can be operated manually, electrically, or mechanically. If a malfunction is discovered, the checkout shall be stopped until the malfunction is corrected.

4.5 Completion of Tests

At the completion of tests and all work relating thereto, all parts of fabrication and equipment shall be thoroughly cleaned. All painted surfaces marred during installation shall be painted to match the original finish.

4.6 Manufacturing Instructions/Documentation

Normally, it is unnecessary to provide additional instructions to qualified or certified technicians. However, it is advisable to use reference material and other workmanship-related information for selecting connector/contact tools, performing connector assembly procedures, and selecting retention tools. Where requested by contract, a test procedure shall be submitted prior to testing, and data sheets shall be retained or submitted after testing is successfully completed.

4.7 Commercial Off-the-Shelf (COTS) Concept

NASA-STD-5005 establishes the general characteristics and requirements for performance, design, test, safety, reliability, maintainability, and quality assurance for facilities, systems, and equipment intended for use at KSC, NASA, or other KSC-responsible locations. It specifies the minimum requirements to provide simple, robust, safe, reliable, maintainable, environmentally compatible, and cost-effective facilities and GSE to support space vehicle launch operations. Design requirements specific to KSC are listed in KSC-DE-512-SM.

COTS equipment, parts, items, or components shall be used to the maximum extent possible when (1) they satisfy the hardware function, (2) they will not degrade the safety or reliability of the flight or ground system, and (3) they provide a cost savings that will exceed possible cost increases due to unique maintenance or logistics requirements, modifications, or an increase in the complexity of the interfacing equipment. In all cases, exact materials of construction and applicable specifications shall be determined to evaluate how well the material meets its requirements. Any additional qualifying tests and inspections shall be indicated in the engineering documentation. Control documents may be created for proposed parts that lack such documentation.

4.7.1 Modified Off-the-Shelf (MOTS) Items

A MOTS item is a COTS item that must be altered to be integrated into or meet the needs of a system or application. The modification may be cosmetic (i.e., changing the protective finish or external color), electromechanical (i.e., altering the physical configuration of equipment by adding to, deleting from, or modifying originally issued parts), or software-based (i.e., modifying the original operational code or language). MOTS items must receive revised part numbers from the original COTS item and are typically unique to the system requesting the modification. Fabrication of MOTS items may void the original COTS item warranty and reduce or eliminate the vendor's liability. After modification, MOTS items must undergo additional testing to verify their functionality, reliability, and safety. Additional testing must validate and document that all NASA, KSC, and system requirements have been met.

5. PREPARATION FOR DELIVERY

ASTM D 3951-98 and customer/engineering requirements establish minimum requirements for packaging of supplies and equipment, exclusive of ammunition, explosives, or hazardous materials, as covered in CFR Title 49, Transportation.

MIL-STD-2073-1 outlines standard processes for the development and documentation of military packaging, as distinct from commercial packaging. This standard covers methods of preservation to protect materiel against environmentally induced corrosion and deterioration, physical and mechanical damage, and other forms of degradation during storage, multiple handling, and shipment of materiel in situations when commercial packaging cannot meet known distribution and environmental requirements. A decision chart is included in MIL-STD-2073-1 for determining the applicability of commercial or military packaging practices.

Marking for shipment and storage shall be in accordance with MIL-STD-129.

For hazardous materials, packing and marking must comply with the hazardous materials regulations in CFR Title 49, Transportation.

Personnel responsible for storing, preserving, identifying, and shipping electrical GSE must comply with Federal and local regulations governing the shipping and handling of hazardous materials where applicable. Standard commercial packaging and specialized military packaging as outlined in ASTM D 3951-98 and MIL-STD-2073-1, respectively, should be used in storing, preserving, identifying, and shipping electrical GSE.

6. NOTES

6.1 Intended Use

This document is intended to define detailed parts, materials, and process requirements and to ensure that essential requirements are included in the fabrication of electrical and electronic control and monitoring equipment associated with GSE used to support the transporting, receiving, handling, assembly, test, checkout, service, and launch of space vehicles and payloads at KSC.

6.2 Definitions

For the purpose of this document, the following definitions shall apply:

100BASE-T: standard "Fast Ethernet" based on twisted pair copper wire transmitting 100 Mbps. 100BaseT4/T2 (Cat3 cabling). T4 indicates four twisted pairs; T2 indicates two twisted pairs.

10BASE-T: standard "plain vanilla" Ethernet based on unshielded twisted pair wire.

bridging router: router that automatically forwards a message it does not understand.

cleave: the process of separating an optical fiber by a controlled fracture of the glass for the purpose of obtaining a fiber end that is flat, smooth, and perpendicular to the fiber axis.

CSMA/CD: Carrier Sense Multiple Access Collision Detection that is an arbitration mechanism for competing Ethernet messages.

ground support equipment: equipment necessary to support the transporting, receiving, handling, assembly, test, checkout, servicing, and launch of space vehicles and payloads.

multimode optical fiber: an optical fiber that will allow more than one bound mode to propagate.

protocol: agreed-upon format for transmitting or storing data.

single-mode optical fiber: an optical fiber in which only the lowest order bound mode (which may consist of a pair of orthogonally polarized fields) can propagate at the wavelength of interest.

socket: (1) a hollow piece or part into which something fits, the socket for a pin to mate in a receptacle connector, the socket used on a torque wrench to fit a specific sized nut or bolt, etc. (2) (Ethernet usage) roughly analogous to a port and is a communication endpoint for a TCP or UDP connection. Sockets can also be used for interprocess communication on a single computer, and multiple sockets can be made to communicate with one another. Sockets are bidirectional, which means that both sides of the connection can send and receive information.

twisted pair: standard wire format for Ethernet cables.

NOTICE. The Government drawings, specifications, and/or data are prepared for the official use by, or on behalf of, the United States Government. The Government neither warrants these Government drawings, specifications, or other data, nor assumes any responsibility or obligation, for their use for purposes other than the Government project for which they were prepared and/or provided by the Government, or any activity directly related thereto. The fact that the Government may have formulated, furnished, or in any way supplied the said drawings, specifications, or other data is not to be regarded, by implication or otherwise, as licensing in any manner the holder or any other person or corporation nor conveying the right or permission to manufacture, use, or sell any patented invention that may relate thereto.

Custodian:

NASA – John F. Kennedy Space Center
Kennedy Space Center, Florida 32899

Preparing Activity:

John F. Kennedy Space Center
Engineering Directorate
Electrical Division

STANDARDIZATION DOCUMENT IMPROVEMENT PROPOSAL

INSTRUCTIONS

1. The preparing activity must complete blocks 1, 2, 3, and 8. In block 1, both the document number and revision letter should be given.
2. The submitter of this form must complete blocks 4, 5, 6, and 7.
3. The preparing activity must provide a reply within 30 days from receipt of the form.

NOTE: This form may not be used to request copies of documents, nor to request waivers or clarification of requirements on current contracts. Comments submitted on this form do not constitute or imply authorization to waive any portion of the referenced document or to amend contractual requirements.

I RECOMMEND A CHANGE:	1. DOCUMENT NUMBER KSC-E-165E	2. DOCUMENT DATE February 2, 2009

3. DOCUMENT TITLE
Electrical Ground Support Equipment Fabrication, Specification for

4. NATURE OF CHANGE *(Identify paragraph number and include proposed rewrite, if possible. Attach extra sheets as needed.)*

5. REASON FOR RECOMMENDATION

6. SUBMITTER

a. NAME *(Last, First, Middle Initial)*	b. ORGANIZATION	
c. ADDRESS *(Include Zip Code)*	d. TELEPHONE *(Include Area Code)*	7. DATE SUBMITTED

8. PREPARING ACTIVITY

a. NAME *(Last, First, Middle Initial)*	b. ORGANIZATION
Denson, Erik C.	Engineering Directorate, Electrical Division

c. ADDRESS *(Include zip code)*
Kennedy Space Center, FL 32899